DMD s.a.s. - V.Redolone,81/b - 51030 Serravalle P.se (PT) - Tel.0573 526852 - Fax 0573 520774 - info@dmdnet.it

DICHTOMATIK

**Any seal. Any time.**

Guarnizioni per **Applicazioni statiche, Movimenti rotanti e Movimenti alternativi**

# Listino prezzi

05/2016

a brand of FREUDENBERG

# Listino prezzi

05/2016

Genova
DICHTOMATIK S.A.S.
Via delle Fabbriche 6
I-16158 Genova-Voltri
Tel. 010/612 75
Fax 010/613 38 61
mail@dichtomatik.it
www.dichtomatik.it

I dati contenuti in questo catalogo sono basati sulle conoscenze derivate dall'esperienza pluriennale nella produzione e nell'impiego di guarnizioni. È possibile, tuttavia, che fattori imponderabili nell'impiego pratico delle guarnizioni, limitino notevolmente il valore di affermazioni generalmente valide. Pertanto le informazioni qui riportate non possono essere considerate vincolanti in modo assoluto.

Le informazioni relative ai parametri di funzionamento delle guarnizioni, quali: temperatura, pressione e velocità sono da intendersi come generalmente valide per i materiali standard. Alcuni materiali, sebbene appartenenti alla stessa famiglia di polimero, possono avere limiti che si scostano dai valori generalmente validi.
I dati di temperatura, pressione e velocità indicati sui cataloghi sono i valori massimi ammessi e non possono essere usati contemporaneamente.

La nostra consulenza tecnica – sia verbale che per iscritto – è fornita in buona fede ma senza garanzia, e questo si applica anche quando sono coinvolti i diritti proprietari di terze parti. Ciò non solleva il cliente / utilizzatore dall'obbligo di testare il prodotto da noi fornito al fine di verificarne la piena idoneità per l'applicazione e / o l'uso al quale è destinato.
L'applicazione, l'uso e l'immissione in un processo sfuggono al nostro controllo e, quindi, sono interamente sotto la responsabilità del cliente / utilizzatore.
Le informazioni contenute nel catalogo possono subire variazioni senza obbligo di preavviso. In caso di pubblicazione di un nuovo catalogo, le edizioni precedenti non saranno più ritenute valide.

Per applicazioni speciali il nostro servizio tecnico commerciale è a Vostra completa disposizione.

Per la riproduzione di ogni e qualsiasi parte del catalogo si dovrà richiedere espressa autorizzazione da parte di Dichtomatik S.A.S.

# INDICE PER FAMIGLIA DI PRODOTTO


| | PRODOTTO | MATERIALE | TIPO | PAG |
|---|---|---|---|---|
| | **APPLICAZIONI STATICHE** | | | |
| | Back-up - Anelli antiestrusione | NBR 90 | STU | 9 |
| | Bonded Seals autocentranti | NBR | USS | 21 |
| | Bonded Seals autocentranti | NBR/INOX | USS | 22 |
| | Bonded Seals std. | NBR | US | 23 |
| | Bonded Seals std. | FKM | US | 26 |
| | Bonded Seals std. | NBR/INOX | US | 29 |
| | Coperchi di chiusura | NBR | VER | 31 |
| | Corda | EPDM 70 | RS | 37 |
| | Corda | FKM 75 | RS | 38 |
| | Corda | NBR 70 | RS | 39 |
| | Corda | SIL 60 | RS | 40 |
| | Guarnizioni per flange SAE J 518 | TPU | FLA | 41 |
| | O-Ring | EPDM 70 PEROX | OR | 47 |
| | O-Ring | FKM 75 FDA | OR | 59 |
| | O-Ring | FKM 75 VERDE | OR | 61 |
| | O-Ring | FKM 80 | OR | 64 |
| | O-Ring | NBR 70 | OR | 106 |
| | O-Ring | SIL 70 - NBR 90 - EPDM 70 | OR | 152 |
| | Rondelle in rame | RAME - KU | FLR | 185 |
| | X-Ring | FKM 70 | XR | 191 |
| | X-Ring | NBR 70 | XR | 196 |
| | **MOVIMENTI ROTANTI** | | | |
| | Anelli di tenuta assiali | FKM | VRM 01 | 207 |
| | Anelli di tenuta assiali | FKM | VRM 02 | 208 |
| | Anelli di tenuta assiali | NBR | VRM 01 | 211 |
| | Anelli di tenuta assiali | NBR | VRM 02 | 212 |
| | Anelli di tenuta per alberi rotanti | FKM | WDR | 213 |
| | Anelli di tenuta per alberi rotanti | NBR | WDR | 237 |

# INDICE PER FAMIGLIA DI PRODOTTO


| | PRODOTTO | MATERIALE | TIPO | PAG |
|---|---|---|---|---|
| | Anelli di tenuta per alberi rotanti | SS304+FKM+PTFE/CARBONE | WCP 20 | 317 |
| | Boccole di scorrimento | SS304 | WSH-R | 321 |
| | V-Ring | FKM 60 | VR VA | 329 |
| | V-Ring | FKM 60 | VR VL | 330 |
| | V-Ring | FKM 60 | VR VS | 331 |
| | V-Ring | NBR 60 | VR VA | 335 |
| | V-Ring | NBR 60 | VR VL | 337 |
| | V-Ring | NBR 60 | VR VS | 338 |


## MOVIMENTI ALTERNATIVI


| | | | | |
|---|---|---|---|---|
| | Anello guida pistone | POM | FRK 03 | 343 |
| | Anello guida pistone | RESINA FENOLICA (HG) | FRK 05 | 347 |
| | Anello guida stelo | POM | FRS 03 | 353 |
| | Anello guida stelo | RESINA FENOLICA (HG) | FRS 05 | 357 |
| | Fascia guida | PTFE/BRONZO | FB 10 | 363 |
| | Fascia guida | PTFE/BRONZO (finitura diamantata) | FB 01 | 367 |
| | Fascia guida | RESINA FENOLICA (HG) | FB 05 | 371 |
| | Guarnizione pistone | NBR 90 TELA IMPREGNATA/NBR 90 | KDS 01 | 375 |
| | Guarnizione pistone | NBR 80/PA/TELA IMPREGNATA NBR 90 | KK 22 | 379 |

# INDICE PER FAMIGLIA DI PRODOTTO

| | PRODOTTO | MATERIALE | TIPO | PAG |
|---|---|---|---|---|
| | Guarnizione pistone | NBR 80/TELA IMPREGNATA/NBR 90 | KN 05 | vedi SN 05/07 p. 419 |
| | Guarnizione pistone | NBR 90 | KN 21 | vedi SN 21 p. 429 |
| | Guarnizione pistone | NBR 90 | KNA 23 | 383 |
| | Guarnizione pistone | NBR TPC/POM | KK 03 | 387 |
| | Guarnizione pistone | NBR 80/TELA IMPREGNATA NBR 90/POM | KNA 16 | 393 |
| | Guarnizione pistone | PTFE + MOLLA V INOX | KNA 44 | 397 |
| | Guarnizione pistone | PTFE BRONZO/OR NBR | KPOR 130 | 401 |
| | Guarnizione pistone | PTFE BRONZO/OR NBR | KPOR 131 | 405 |
| | Guarnizione pistone | TPU | KN 25 | vedi SN 25 p. 449 |
| | Guarnizione pistone | TPU | KN 36 | vedi SN 36 p. 461 |
| | Guarnizione pistone | TPU | KNA 28 | 409 |
| | Guarnizione stelo | NBR 90 TELA IMPREGNATA/NBR90 | SDS 01 3/2 | 415 |
| | Guarnizione stelo | NBR 80/TELA IMPREGNATA NBR 90/POM | SN 05 - SNI 07 | 419 |

# INDICE PER FAMIGLIA DI PRODOTTO


| | PRODOTTO | MATERIALE | TIPO | PAG |
|---|---|---|---|---|
| | Guarnizione stelo | NBR 90 | SNI 24 | 425 |
| | Guarnizione stelo | NBR 90 | SN 21 | 429 |
| | Guarnizione stelo | PTFE + MOLLA V INOX | SNI 43 | 437 |
| | Guarnizione stelo | PTFE BRONZO/OR NBR | SPOR 130 | 441 |
| | Guarnizione stelo | PTFE BRONZO/OR NBR | SPOR 131 | 445 |
| | Guarnizione stelo | TPU | SN 25 | 449 |
| | Guarnizione stelo | TPU | SN 36 | 461 |
| | Guarnizione stelo | TPU | SNI 30 | 467 |
| | Guarnizione stelo | TPU | SNI 39 | 477 |
| | Raschiatore | FKM 90/METAL | AM 43 | 489 |
| | Raschiatore | NBR 90 | AD 51 | 493 |
| | Raschiatore | NBR 90 | AE 40 | 497 |
| | Raschiatore | NBR 90 | AE 41 | 501 |

# INDICE PER FAMIGLIA DI PRODOTTO


| | PRODOTTO | MATERIALE | TIPO | PAG |
|---|---|---|---|---|
| | Raschiatore | NBR 90/METAL | AM 43 | 505 |
| | Raschiatore | NBR 90/METAL | AM 45 | 511 |
| | Raschiatore | PTFE BRONZO/OR NBR | AD 60 | 515 |
| | Raschiatore | PTFE BRONZO/OR NBR | AD 61 | 519 |
| | Raschiatore | TPU 90 | AE 42 | 523 |
| | Raschiatore | TPU 90 | AE 47 | 527 |
| | Raschiatore | TPU 95 | AD 48 | 531 |
| | Raschiatore | TPU 95/METAL | ADM 55 | 535 |
| | Raschiatore | TPU 95/METAL | AM 44 | 539 |
| | Raschiatore | TPU 95/METAL | AM 54 | 545 |


## LEGENDA MATERIALI

| | |
|---|---|
| EPDM | Gomma etilene-propilene-diene |
| FKM | Gomma fluorurata - Viton (marchio registrato) |
| NBR | Gomma nitrilica |
| PA | Poliammide |
| POM | Poliossimetilene |
| PTFE | Politetrafluoroetilene - Teflon (marchio registrato) |
| SIL | Gomma siliconica |
| SS 304 | Acciaio inossidabile AISI 304 |
| TPU | Poliuretano |

# APPLICAZIONI STATICHE

BACK-UP - ANELLI ANTIESTRUSIONE
BONDED SEALS AUTOCENTRANTI
BONDED SEALS STD.
COPERCHI DI CHIUSURA
CORDA
GUARNIZIONI PER FLANGE SAE J 518
O-RING
RONDELLE IN RAME
X-RING

# Back-up
# Anelli antiestrusione

NBR 90

STU

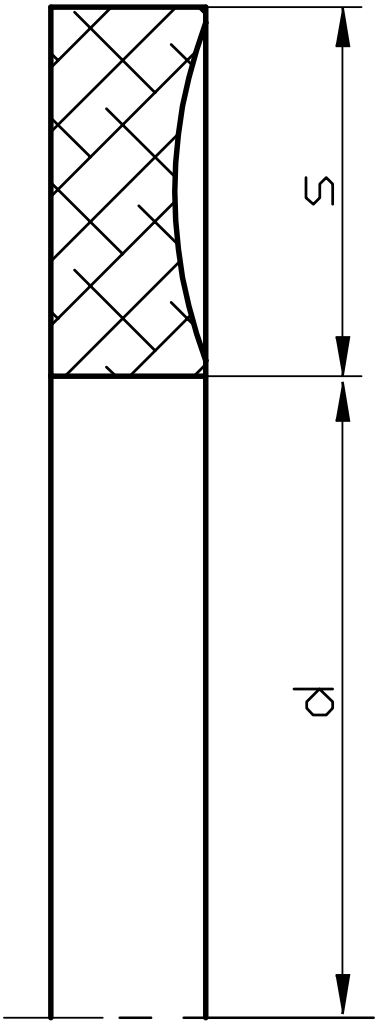
d
S

| CODICE | TIPO | RIF. | MAT. | SHORE | d mm | s mm | LISTINO 5-2016 X 100 € |
|---|---|---|---|---|---|---|---|
| 58930 | STU | 4 | NBR | 90 | 2,44 | 1,35 | 8,91 |
| 58931 | STU | 5 | NBR | 90 | 3,23 | 1,35 | 8,91 |
| 58932 | STU | 6 | NBR | 90 | 3,56 | 1,35 | 8,91 |
| 58933 | STU | 7 | NBR | 90 | 4,34 | 1,35 | 9,75 |
| 58934 | STU | 8 | NBR | 90 | 5,13 | 1,35 | 9,75 |
| 58935 | STU | 9 | NBR | 90 | 5,94 | 1,35 | 9,75 |
| 58936 | STU | 10 | NBR | 90 | 6,73 | 1,35 | 10,22 |
| 58937 | STU | 11 | NBR | 90 | 8,31 | 1,35 | 10,22 |
| 58938 | STU | 12 | NBR | 90 | 9,91 | 1,35 | 11,20 |
| 58939 | STU | 13 | NBR | 90 | 11,56 | 1,35 | 11,20 |
| 58940 | STU | 14 | NBR | 90 | 13,16 | 1,35 | 12,05 |
| 58941 | STU | 15 | NBR | 90 | 14,73 | 1,35 | 12,05 |
| 58942 | STU | 16 | NBR | 90 | 16,33 | 1,35 | 12,97 |
| 58943 | STU | 17 | NBR | 90 | 17,91 | 1,35 | 12,97 |
| 58944 | STU | 18 | NBR | 90 | 19,51 | 1,35 | 13,83 |
| 58945 | STU | 19 | NBR | 90 | 21,08 | 1,35 | 13,83 |
| 58946 | STU | 20 | NBR | 90 | 22,68 | 1,35 | 14,92 |
| 58947 | STU | 21 | NBR | 90 | 24,26 | 1,35 | 15,97 |
| 58948 | STU | 22 | NBR | 90 | 25,86 | 1,35 | 15,97 |
| 58949 | STU | 23 | NBR | 90 | 27,43 | 1,35 | 18,66 |
| 58950 | STU | 24 | NBR | 90 | 29,03 | 1,35 | 21,29 |
| 58951 | STU | 25 | NBR | 90 | 30,61 | 1,35 | 22,37 |
| 58952 | STU | 26 | NBR | 90 | 32,21 | 1,35 | 23,98 |
| 58953 | STU | 27 | NBR | 90 | 33,78 | 1,35 | 25,55 |
| 58954 | STU | 28 | NBR | 90 | 35,38 | 1,35 | 29,31 |
| 58955 | STU | 29 | NBR | 90 | 38,56 | 1,35 | 29,31 |
| 58956 | STU | 30 | NBR | 90 | 41,73 | 1,35 | 31,94 |
| 58957 | STU | 31 | NBR | 90 | 44,91 | 1,35 | 34,63 |
| 58958 | STU | 32 | NBR | 90 | 48,08 | 1,35 | 35,69 |
| 58959 | STU | 33 | NBR | 90 | 51,26 | 1,35 | 37,26 |
| 58960 | STU | 34 | NBR | 90 | 54,43 | 1,35 | 37,26 |
| 58961 | STU | 35 | NBR | 90 | 57,61 | 1,35 | 38,34 |
| 58962 | STU | 36 | NBR | 90 | 60,78 | 1,35 | 38,34 |
| 58963 | STU | 37 | NBR | 90 | 63,96 | 1,35 | 47,91 |
| 58964 | STU | 38 | NBR | 90 | 67,13 | 1,35 | 53,24 |
| 58965 | STU | 39 | NBR | 90 | 70,31 | 1,35 | 63,87 |
| 58966 | STU | 40 | NBR | 90 | 73,48 | 1,35 | 74,52 |
| 58967 | STU | 41 | NBR | 90 | 76,66 | 1,35 | 85,18 |
| 58968 | STU | 42 | NBR | 90 | 83,01 | 1,35 | 85,18 |
| 58969 | STU | 43 | NBR | 90 | 89,36 | 1,35 | 90,50 |
| 58970 | STU | 44 | NBR | 90 | 95,71 | 1,35 | 90,50 |
| 58971 | STU | 45 | NBR | 90 | 102,06 | 1,35 | 95,82 |
| 58972 | STU | 46 | NBR | 90 | 108,41 | 1,35 | 133,09 |
| 58973 | STU | 47 | NBR | 90 | 114,76 | 1,35 | 143,74 |
| 58974 | STU | 48 | NBR | 90 | 121,11 | 1,35 | 149,07 |
| 58975 | STU | 49 | NBR | 90 | 127,46 | 1,35 | 170,36 |
| 58976 | STU | 50 | NBR | 90 | 133,81 | 1,35 | 170,36 |
| 58977 | STU | 102 | NBR | 90 | 1,96 | 2,18 | 8,91 |
| 58978 | STU | 103 | NBR | 90 | 2,77 | 2,18 | 8,91 |

| CODICE | TIPO | RIF. | MAT. | SHORE | d mm | s mm | LISTINO 5-2016 X 100 € |
|---|---|---|---|---|---|---|---|
| 58979 | STU | 104 | NBR | 90 | 3,56 | 2,18 | 8,91 |
| 58980 | STU | 105 | NBR | 90 | 4,34 | 2,18 | 8,91 |
| 58981 | STU | 106 | NBR | 90 | 5,13 | 2,18 | 9,35 |
| 58982 | STU | 107 | NBR | 90 | 5,94 | 2,18 | 9,35 |
| 58983 | STU | 108 | NBR | 90 | 6,73 | 2,18 | 9,75 |
| 58984 | STU | 109 | NBR | 90 | 8,31 | 2,18 | 10,74 |
| 58985 | STU | 110 | NBR | 90 | 9,91 | 2,18 | 11,62 |
| 58986 | STU | 111 | NBR | 90 | 11,48 | 2,18 | 12,05 |
| 58987 | STU | 112 | NBR | 90 | 13,08 | 2,18 | 12,05 |
| 58988 | STU | 113 | NBR | 90 | 14,66 | 2,18 | 12,97 |
| 58989 | STU | 114 | NBR | 90 | 16,26 | 2,18 | 12,97 |
| 58990 | STU | 115 | NBR | 90 | 17,83 | 2,18 | 13,83 |
| 58991 | STU | 116 | NBR | 90 | 19,43 | 2,18 | 13,83 |
| 58992 | STU | 117 | NBR | 90 | 21,11 | 2,18 | 14,92 |
| 58993 | STU | 118 | NBR | 90 | 22,68 | 2,18 | 14,92 |
| 58994 | STU | 119 | NBR | 90 | 24,28 | 2,18 | 15,97 |
| 58995 | STU | 120 | NBR | 90 | 25,86 | 2,18 | 17,03 |
| 58996 | STU | 121 | NBR | 90 | 27,46 | 2,18 | 17,03 |
| 58997 | STU | 122 | NBR | 90 | 29,03 | 2,18 | 17,59 |
| 58998 | STU | 123 | NBR | 90 | 30,63 | 2,18 | 19,16 |
| 58999 | STU | 124 | NBR | 90 | 32,21 | 2,18 | 19,16 |
| 59000 | STU | 125 | NBR | 90 | 33,81 | 2,18 | 19,73 |
| 59001 | STU | 126 | NBR | 90 | 35,38 | 2,18 | 21,29 |
| 59002 | STU | 127 | NBR | 90 | 36,98 | 2,18 | 21,29 |
| 59003 | STU | 128 | NBR | 90 | 38,56 | 2,18 | 22,37 |
| 59004 | STU | 129 | NBR | 90 | 40,16 | 2,18 | 22,37 |
| 59005 | STU | 130 | NBR | 90 | 41,73 | 2,18 | 23,98 |
| 59006 | STU | 131 | NBR | 90 | 43,33 | 2,18 | 24,48 |
| 59007 | STU | 132 | NBR | 90 | 44,91 | 2,18 | 24,48 |
| 59008 | STU | 133 | NBR | 90 | 46,51 | 2,18 | 26,61 |
| 59009 | STU | 134 | NBR | 90 | 48,08 | 2,18 | 26,61 |
| 59010 | STU | 135 | NBR | 90 | 49,68 | 2,18 | 29,31 |
| 59011 | STU | 136 | NBR | 90 | 51,26 | 2,18 | 29,31 |
| 59012 | STU | 137 | NBR | 90 | 52,86 | 2,18 | 31,94 |
| 59013 | STU | 138 | NBR | 90 | 54,43 | 2,18 | 31,94 |
| 59014 | STU | 139 | NBR | 90 | 56,03 | 2,18 | 37,26 |
| 59015 | STU | 140 | NBR | 90 | 57,61 | 2,18 | 37,26 |
| 59016 | STU | 141 | NBR | 90 | 59,21 | 2,18 | 39,94 |
| 59017 | STU | 142 | NBR | 90 | 60,78 | 2,18 | 42,59 |
| 59018 | STU | 143 | NBR | 90 | 62,38 | 2,18 | 42,59 |
| 59019 | STU | 144 | NBR | 90 | 63,96 | 2,18 | 45,27 |
| 59020 | STU | 145 | NBR | 90 | 65,56 | 2,18 | 45,27 |
| 59021 | STU | 146 | NBR | 90 | 67,13 | 2,18 | 47,91 |
| 59022 | STU | 147 | NBR | 90 | 68,73 | 2,18 | 53,24 |
| 59023 | STU | 148 | NBR | 90 | 70,31 | 2,18 | 53,24 |
| 59024 | STU | 149 | NBR | 90 | 71,91 | 2,18 | 63,87 |
| 59025 | STU | 150 | NBR | 90 | 73,48 | 2,18 | 69,20 |
| 59026 | STU | 151 | NBR | 90 | 76,66 | 2,18 | 69,20 |
| 59027 | STU | 152 | NBR | 90 | 83,01 | 2,18 | 74,52 |

| CODICE | TIPO | RIF. | MAT. | SHORE | d mm | s mm | LISTINO 5-2016 X 100 € |
|---|---|---|---|---|---|---|---|
| 59028 | STU | 153 | NBR | 90 | 89,36 | 2,18 | 79,86 |
| 59029 | STU | 154 | NBR | 90 | 95,71 | 2,18 | 79,86 |
| 59030 | STU | 155 | NBR | 90 | 102,06 | 2,18 | 90,50 |
| 59031 | STU | 156 | NBR | 90 | 108,41 | 2,18 | 95,82 |
| 59032 | STU | 157 | NBR | 90 | 114,76 | 2,18 | 95,82 |
| 59033 | STU | 158 | NBR | 90 | 121,11 | 2,18 | 101,16 |
| 59034 | STU | 159 | NBR | 90 | 127,46 | 2,18 | 101,16 |
| 59035 | STU | 160 | NBR | 90 | 133,81 | 2,18 | 106,48 |
| 59036 | STU | 161 | NBR | 90 | 140,16 | 2,18 | 117,13 |
| 59037 | STU | 162 | NBR | 90 | 146,51 | 2,18 | 127,77 |
| 59038 | STU | 163 | NBR | 90 | 152,86 | 2,18 | 138,42 |
| 59039 | STU | 164 | NBR | 90 | 159,21 | 2,18 | 138,42 |
| 59040 | STU | 165 | NBR | 90 | 165,56 | 2,18 | 143,74 |
| 59041 | STU | 166 | NBR | 90 | 171,91 | 2,18 | 149,07 |
| 59042 | STU | 167 | NBR | 90 | 178,26 | 2,18 | 149,07 |
| 59043 | STU | 168 | NBR | 90 | 184,61 | 2,18 | 159,72 |
| 59044 | STU | 169 | NBR | 90 | 190,96 | 2,18 | 159,72 |
| 59045 | STU | 170 | NBR | 90 | 197,31 | 2,18 | 186,33 |
| 59046 | STU | 171 | NBR | 90 | 203,66 | 2,18 | 212,94 |
| 59047 | STU | 172 | NBR | 90 | 210,01 | 2,18 | 212,94 |
| 59048 | STU | 173 | NBR | 90 | 216,36 | 2,18 | 212,94 |
| 59049 | STU | 174 | NBR | 90 | 222,71 | 2,18 | 223,59 |
| 59050 | STU | 175 | NBR | 90 | 229,06 | 2,18 | 239,57 |
| 59051 | STU | 176 | NBR | 90 | 235,41 | 2,18 | 239,57 |
| 59052 | STU | 177 | NBR | 90 | 241,76 | 2,18 | 266,19 |
| 59053 | STU | 178 | NBR | 90 | 248,11 | 2,18 | 292,80 |
| 59054 | STU | 201 | NBR | 90 | 5,13 | 3 | 12,54 |
| 59055 | STU | 202 | NBR | 90 | 6,73 | 3 | 12,54 |
| 59056 | STU | 203 | NBR | 90 | 8,3 | 3 | 13,42 |
| 59057 | STU | 204 | NBR | 90 | 9,9 | 3 | 14,40 |
| 59058 | STU | 205 | NBR | 90 | 11,56 | 3 | 14,40 |
| 59059 | STU | 206 | NBR | 90 | 13,16 | 3 | 14,92 |
| 59060 | STU | 207 | NBR | 90 | 14,73 | 3 | 14,92 |
| 59061 | STU | 208 | NBR | 90 | 16,33 | 3 | 15,47 |
| 59062 | STU | 209 | NBR | 90 | 17,9 | 3 | 15,97 |
| 59063 | STU | 210 | NBR | 90 | 19,46 | 3 | 15,97 |
| 59064 | STU | 211 | NBR | 90 | 21,03 | 3 | 15,97 |
| 59065 | STU | 212 | NBR | 90 | 22,63 | 3 | 17,03 |
| 59066 | STU | 213 | NBR | 90 | 24,21 | 3 | 17,03 |
| 59067 | STU | 214 | NBR | 90 | 25,81 | 3 | 18,66 |
| 59068 | STU | 215 | NBR | 90 | 27,38 | 3 | 18,66 |
| 59069 | STU | 216 | NBR | 90 | 28,98 | 3 | 18,66 |
| 59070 | STU | 217 | NBR | 90 | 30,56 | 3 | 19,16 |
| 59071 | STU | 218 | NBR | 90 | 32,16 | 3 | 19,16 |
| 59072 | STU | 219 | NBR | 90 | 33,88 | 3 | 21,29 |
| 59073 | STU | 220 | NBR | 90 | 35,48 | 3 | 23,98 |
| 59074 | STU | 221 | NBR | 90 | 37,06 | 3 | 26,61 |
| 59075 | STU | 222 | NBR | 90 | 38,66 | 3 | 27,69 |
| 59076 | STU | 223 | NBR | 90 | 41,83 | 3 | 29,31 |

| CODICE | TIPO | RIF. | MAT. | SHORE | d mm | s mm | LISTINO 5-2016 X 100 € |
|---|---|---|---|---|---|---|---|
| 59077 | STU | 224 | NBR | 90 | 45,01 | 3 | 31,94 |
| 59078 | STU | 225 | NBR | 90 | 48,18 | 3 | 36,20 |
| 59079 | STU | 226 | NBR | 90 | 51,36 | 3 | 37,26 |
| 59080 | STU | 227 | NBR | 90 | 54,53 | 3 | 39,94 |
| 59081 | STU | 228 | NBR | 90 | 57,71 | 3 | 41,53 |
| 59082 | STU | 229 | NBR | 90 | 60,88 | 3 | 42,59 |
| 59083 | STU | 230 | NBR | 90 | 64,06 | 3 | 45,27 |
| 59084 | STU | 231 | NBR | 90 | 66,83 | 3 | 45,27 |
| 59085 | STU | 232 | NBR | 90 | 70 | 3 | 47,91 |
| 59086 | STU | 233 | NBR | 90 | 73,18 | 3 | 53,24 |
| 59087 | STU | 234 | NBR | 90 | 76,35 | 3 | 63,87 |
| 59088 | STU | 235 | NBR | 90 | 79,53 | 3 | 63,87 |
| 59089 | STU | 236 | NBR | 90 | 82,7 | 3 | 69,20 |
| 59090 | STU | 237 | NBR | 90 | 85,88 | 3 | 74,52 |
| 59091 | STU | 238 | NBR | 90 | 89,05 | 3 | 74,52 |
| 59092 | STU | 239 | NBR | 90 | 92,23 | 3 | 79,86 |
| 59093 | STU | 240 | NBR | 90 | 95,4 | 3 | 90,50 |
| 59094 | STU | 241 | NBR | 90 | 98,58 | 3 | 95,82 |
| 59095 | STU | 242 | NBR | 90 | 101,75 | 3 | 95,82 |
| 59096 | STU | 243 | NBR | 90 | 104,93 | 3 | 106,48 |
| 59097 | STU | 244 | NBR | 90 | 108,1 | 3 | 106,48 |
| 59098 | STU | 245 | NBR | 90 | 111,28 | 3 | 106,48 |
| 59099 | STU | 246 | NBR | 90 | 114,45 | 3 | 111,81 |
| 59100 | STU | 247 | NBR | 90 | 117,63 | 3 | 117,13 |
| 59101 | STU | 248 | NBR | 90 | 121,11 | 3 | 122,46 |
| 59102 | STU | 249 | NBR | 90 | 124,28 | 3 | 122,46 |
| 59103 | STU | 250 | NBR | 90 | 127,46 | 3 | 127,77 |
| 59104 | STU | 251 | NBR | 90 | 130,63 | 3 | 127,77 |
| 59105 | STU | 252 | NBR | 90 | 133,81 | 3 | 133,09 |
| 59106 | STU | 253 | NBR | 90 | 136,98 | 3 | 133,09 |
| 59107 | STU | 254 | NBR | 90 | 140,16 | 3 | 138,42 |
| 59108 | STU | 255 | NBR | 90 | 143,33 | 3 | 138,42 |
| 59109 | STU | 256 | NBR | 90 | 146,51 | 3 | 143,74 |
| 59110 | STU | 257 | NBR | 90 | 149,68 | 3 | 143,74 |
| 59111 | STU | 258 | NBR | 90 | 152,86 | 3 | 149,07 |
| 59112 | STU | 259 | NBR | 90 | 159,21 | 3 | 154,39 |
| 59113 | STU | 260 | NBR | 90 | 165,56 | 3 | 159,72 |
| 59114 | STU | 261 | NBR | 90 | 171,91 | 3 | 159,72 |
| 59115 | STU | 262 | NBR | 90 | 178,26 | 3 | 170,36 |
| 59116 | STU | 263 | NBR | 90 | 184,61 | 3 | 186,33 |
| 59117 | STU | 264 | NBR | 90 | 190,96 | 3 | 191,65 |
| 59118 | STU | 265 | NBR | 90 | 197,31 | 3 | 196,98 |
| 59119 | STU | 266 | NBR | 90 | 203,66 | 3 | 202,29 |
| 59120 | STU | 267 | NBR | 90 | 210,01 | 3 | 212,94 |
| 59121 | STU | 268 | NBR | 90 | 216,36 | 3 | 223,59 |
| 59122 | STU | 269 | NBR | 90 | 222,71 | 3 | 223,59 |
| 59123 | STU | 270 | NBR | 90 | 229,06 | 3 | 239,57 |
| 59124 | STU | 271 | NBR | 90 | 235,41 | 3 | 255,54 |
| 59125 | STU | 272 | NBR | 90 | 241,76 | 3 | 266,19 |

| CODICE | TIPO | RIF. | MAT. | SHORE | d mm | s mm | LISTINO 5-2016 X 100 € |
|---|---|---|---|---|---|---|---|
| 59126 | STU | 273 | NBR | 90 | 248,11 | 3 | 292,80 |
| 59127 | STU | 274 | NBR | 90 | 254,46 | 3 | 319,42 |
| 59128 | STU | 275 | NBR | 90 | 267,16 | 3 | 346,04 |
| 59129 | STU | 276 | NBR | 90 | 279,86 | 3 | 372,66 |
| 59130 | STU | 277 | NBR | 90 | 292,56 | 3 | 383,31 |
| 59131 | STU | 278 | NBR | 90 | 305,26 | 3 | 425,89 |
| 59132 | STU | 279 | NBR | 90 | 330,66 | 3 | 425,89 |
| 59133 | STU | 280 | NBR | 90 | 356,06 | 3 | 452,51 |
| 59134 | STU | 281 | NBR | 90 | 381,46 | 3 | 479,13 |
| 59135 | STU | 282 | NBR | 90 | 406,12 | 3 | 532,38 |
| 59136 | STU | 283 | NBR | 90 | 431,52 | 3 | 851,79 |
| 59137 | STU | 284 | NBR | 90 | 456,92 | 3 | 958,26 |
| 59138 | STU | 309 | NBR | 90 | 11,43 | 4,65 | 18,66 |
| 59139 | STU | 310 | NBR | 90 | 13,06 | 4,65 | 18,66 |
| 59140 | STU | 311 | NBR | 90 | 14,6 | 4,65 | 21,29 |
| 59141 | STU | 312 | NBR | 90 | 16,2 | 4,65 | 21,29 |
| 59142 | STU | 313 | NBR | 90 | 17,78 | 4,65 | 22,37 |
| 59143 | STU | 314 | NBR | 90 | 19,38 | 4,65 | 23,98 |
| 59144 | STU | 315 | NBR | 90 | 20,96 | 4,65 | 26,61 |
| 59145 | STU | 316 | NBR | 90 | 22,56 | 4,65 | 29,31 |
| 59146 | STU | 317 | NBR | 90 | 24,13 | 4,65 | 29,31 |
| 59147 | STU | 318 | NBR | 90 | 25,73 | 4,65 | 31,94 |
| 59148 | STU | 319 | NBR | 90 | 27,31 | 4,65 | 34,63 |
| 59149 | STU | 320 | NBR | 90 | 28,91 | 4,65 | 37,26 |
| 59150 | STU | 321 | NBR | 90 | 30,42 | 4,65 | 38,34 |
| 59151 | STU | 322 | NBR | 90 | 32,08 | 4,65 | 39,94 |
| 59152 | STU | 323 | NBR | 90 | 33,43 | 4,65 | 42,59 |
| 59153 | STU | 324 | NBR | 90 | 35,26 | 4,65 | 42,59 |
| 59154 | STU | 325 | NBR | 90 | 38,43 | 4,65 | 45,27 |
| 59155 | STU | 326 | NBR | 90 | 41,61 | 4,65 | 47,91 |
| 59156 | STU | 327 | NBR | 90 | 44,78 | 4,65 | 53,24 |
| 59157 | STU | 328 | NBR | 90 | 47,96 | 4,65 | 58,55 |
| 59158 | STU | 329 | NBR | 90 | 51,13 | 4,65 | 63,87 |
| 59159 | STU | 330 | NBR | 90 | 54,31 | 4,65 | 63,87 |
| 59160 | STU | 331 | NBR | 90 | 57,61 | 4,65 | 69,20 |
| 59161 | STU | 332 | NBR | 90 | 60,78 | 4,65 | 69,20 |
| 59162 | STU | 333 | NBR | 90 | 63,96 | 4,65 | 69,20 |
| 59163 | STU | 334 | NBR | 90 | 67,13 | 4,65 | 74,52 |
| 59164 | STU | 335 | NBR | 90 | 70,31 | 4,65 | 74,52 |
| 59165 | STU | 336 | NBR | 90 | 73,48 | 4,65 | 79,86 |
| 59166 | STU | 337 | NBR | 90 | 76,66 | 4,65 | 85,18 |
| 59167 | STU | 338 | NBR | 90 | 79,83 | 4,65 | 90,50 |
| 59168 | STU | 339 | NBR | 90 | 83,13 | 4,65 | 95,82 |
| 59169 | STU | 340 | NBR | 90 | 86,31 | 4,65 | 101,16 |
| 59170 | STU | 341 | NBR | 90 | 89,48 | 4,65 | 106,48 |
| 59171 | STU | 342 | NBR | 90 | 92,66 | 4,65 | 111,81 |
| 59172 | STU | 343 | NBR | 90 | 95,83 | 4,65 | 111,81 |
| 59173 | STU | 344 | NBR | 90 | 99,01 | 4,65 | 117,13 |
| 59174 | STU | 345 | NBR | 90 | 102,31 | 4,65 | 122,46 |

| CODICE | TIPO | RIF. | MAT. | SHORE | d mm | s mm | LISTINO 5-2016 X 100 € |
|---|---|---|---|---|---|---|---|
| 59175 | STU | 346 | NBR | 90 | 105,49 | 4,65 | 127,77 |
| 59176 | STU | 347 | NBR | 90 | 108,66 | 4,65 | 133,09 |
| 59177 | STU | 348 | NBR | 90 | 111,84 | 4,65 | 143,74 |
| 59178 | STU | 349 | NBR | 90 | 115,01 | 4,65 | 149,07 |
| 59179 | STU | 350 | NBR | 90 | 118,19 | 4,65 | 149,07 |
| 59180 | STU | 351 | NBR | 90 | 121,36 | 4,65 | 159,72 |
| 59181 | STU | 352 | NBR | 90 | 124,54 | 4,65 | 170,36 |
| 59182 | STU | 353 | NBR | 90 | 127,71 | 4,65 | 170,36 |
| 59183 | STU | 354 | NBR | 90 | 130,89 | 4,65 | 170,36 |
| 59184 | STU | 355 | NBR | 90 | 134,06 | 4,65 | 175,68 |
| 59185 | STU | 356 | NBR | 90 | 137,24 | 4,65 | 186,33 |
| 59186 | STU | 357 | NBR | 90 | 140,41 | 4,65 | 191,65 |
| 59187 | STU | 358 | NBR | 90 | 143,59 | 4,65 | 202,29 |
| 59188 | STU | 359 | NBR | 90 | 146,76 | 4,65 | 202,29 |
| 59189 | STU | 360 | NBR | 90 | 149,94 | 4,65 | 212,94 |
| 59190 | STU | 361 | NBR | 90 | 153,11 | 4,65 | 223,59 |
| 59191 | STU | 362 | NBR | 90 | 159,46 | 4,65 | 223,59 |
| 59192 | STU | 363 | NBR | 90 | 165,81 | 4,65 | 239,57 |
| 59193 | STU | 364 | NBR | 90 | 172,16 | 4,65 | 250,21 |
| 59194 | STU | 365 | NBR | 90 | 178,51 | 4,65 | 255,54 |
| 59195 | STU | 366 | NBR | 90 | 184,86 | 4,65 | 255,54 |
| 59196 | STU | 367 | NBR | 90 | 191,21 | 4,65 | 266,19 |
| 59197 | STU | 368 | NBR | 90 | 197,56 | 4,65 | 266,19 |
| 59198 | STU | 369 | NBR | 90 | 203,91 | 4,65 | 276,83 |
| 59199 | STU | 370 | NBR | 90 | 210,26 | 4,65 | 292,80 |
| 59200 | STU | 371 | NBR | 90 | 216,61 | 4,65 | 292,80 |
| 59201 | STU | 372 | NBR | 90 | 222,96 | 4,65 | 308,77 |
| 59202 | STU | 373 | NBR | 90 | 229,31 | 4,65 | 319,42 |
| 59203 | STU | 374 | NBR | 90 | 235,66 | 4,65 | 319,42 |
| 59204 | STU | 375 | NBR | 90 | 242,01 | 4,65 | 346,04 |
| 59205 | STU | 376 | NBR | 90 | 248,36 | 4,65 | 346,04 |
| 59206 | STU | 377 | NBR | 90 | 254,71 | 4,65 | 346,04 |
| 59207 | STU | 378 | NBR | 90 | 267,41 | 4,65 | 372,66 |
| 59208 | STU | 379 | NBR | 90 | 280,11 | 4,65 | 425,89 |
| 59209 | STU | 380 | NBR | 90 | 292,81 | 4,65 | 425,89 |
| 59210 | STU | 381 | NBR | 90 | 305,51 | 4,65 | 479,13 |
| 59211 | STU | 382 | NBR | 90 | 330,91 | 4,65 | 638,84 |
| 59212 | STU | 383 | NBR | 90 | 356,31 | 4,65 | 798,55 |
| 59213 | STU | 384 | NBR | 90 | 381,71 | 4,65 | 843,26 |
| 59214 | STU | 385 | NBR | 90 | 406,6 | 4,65 | 890,50 |
| 59215 | STU | 386 | NBR | 90 | 432 | 4,65 | 940,36 |
| 59216 | STU | 387 | NBR | 90 | 457,4 | 4,65 | 993,04 |
| 59225 | STU | 425 | NBR | 90 | 115,6 | 5,99 | 149,07 |
| 59226 | STU | 426 | NBR | 90 | 118,77 | 5,99 | 149,07 |
| 59227 | STU | 427 | NBR | 90 | 121,95 | 5,99 | 149,07 |
| 59228 | STU | 428 | NBR | 90 | 125,2 | 5,99 | 159,72 |
| 59229 | STU | 429 | NBR | 90 | 128,3 | 5,99 | 159,72 |
| 59230 | STU | 430 | NBR | 90 | 131,47 | 5,99 | 159,72 |

| CODICE | TIPO | RIF. | MAT. | SHORE | d mm | s mm | LISTINO 5-2016 X 100 € |
|---|---|---|---|---|---|---|---|
| 59231 | STU | 431 | NBR | 90 | 134,65 | 5,99 | 170,36 |
| 59232 | STU | 432 | NBR | 90 | 137,82 | 5,99 | 170,36 |
| 59233 | STU | 433 | NBR | 90 | 141 | 5,99 | 170,36 |
| 59234 | STU | 434 | NBR | 90 | 144,17 | 5,99 | 175,68 |
| 59235 | STU | 435 | NBR | 90 | 147,35 | 5,99 | 175,68 |
| 59236 | STU | 436 | NBR | 90 | 150,52 | 5,99 | 175,68 |
| 59237 | STU | 437 | NBR | 90 | 153,7 | 5,99 | 181,00 |
| 59238 | STU | 438 | NBR | 90 | 159,36 | 5,99 | 212,94 |
| 59239 | STU | 439 | NBR | 90 | 165,71 | 5,99 | 239,57 |
| 59240 | STU | 440 | NBR | 90 | 172,06 | 5,99 | 266,19 |
| 59241 | STU | 441 | NBR | 90 | 178,41 | 5,99 | 292,80 |
| 59242 | STU | 442 | NBR | 90 | 184,76 | 5,99 | 319,42 |
| 59243 | STU | 443 | NBR | 90 | 191,11 | 5,99 | 319,42 |
| 59244 | STU | 444 | NBR | 90 | 197,46 | 5,99 | 330,07 |
| 59245 | STU | 445 | NBR | 90 | 203,81 | 5,99 | 346,04 |
| 59246 | STU | 446 | NBR | 90 | 216,51 | 5,99 | 362,01 |
| 59247 | STU | 447 | NBR | 90 | 229,21 | 5,99 | 383,31 |
| 59248 | STU | 448 | NBR | 90 | 241,91 | 5,99 | 425,89 |
| 59249 | STU | 449 | NBR | 90 | 254,61 | 5,99 | 425,89 |
| 59250 | STU | 450 | NBR | 90 | 267,31 | 5,99 | 452,51 |
| 59251 | STU | 451 | NBR | 90 | 280,01 | 5,99 | 452,51 |
| 59252 | STU | 452 | NBR | 90 | 292,79 | 5,99 | 452,51 |
| 59253 | STU | 453 | NBR | 90 | 305,41 | 5,99 | 505,75 |
| 59254 | STU | 454 | NBR | 90 | 318,11 | 5,99 | 798,55 |
| 59255 | STU | 455 | NBR | 90 | 330,81 | 5,99 | 798,55 |
| 59256 | STU | 456 | NBR | 90 | 343,51 | 5,99 | 851,79 |
| 59257 | STU | 457 | NBR | 90 | 356,21 | 5,99 | 851,79 |
| 59258 | STU | 458 | NBR | 90 | 368,91 | 5,99 | 958,26 |
| 59259 | STU | 459 | NBR | 90 | 381,61 | 5,99 | 958,26 |
| 59260 | STU | 460 | NBR | 90 | 394,31 | 5,99 | 1.064,73 |
| 59261 | STU | 461 | NBR | 90 | 406,05 | 5,99 | 1.224,45 |
| 59262 | STU | 462 | NBR | 90 | 419,2 | 5,99 | 1.330,93 |
| 59263 | STU | 463 | NBR | 90 | 431,9 | 5,99 | 1.330,93 |
| 59264 | STU | 464 | NBR | 90 | 444,6 | 5,99 | 1.330,93 |
| 59265 | STU | 465 | NBR | 90 | 457,3 | 5,99 | 1.384,17 |
| 59266 | STU | 466 | NBR | 90 | 470 | 5,99 | 1.384,17 |
| 59267 | STU | 467 | NBR | 90 | 482,7 | 5,99 | 1.384,17 |
| 59268 | STU | 468 | NBR | 90 | 495,4 | 5,99 | A RICHIESTA |
| 59269 | STU | 469 | NBR | 90 | 508,1 | 5,99 | A RICHIESTA |
| 59270 | STU | 470 | NBR | 90 | 533,5 | 5,99 | A RICHIESTA |
| 59271 | STU | 471 | NBR | 90 | 558,9 | 5,99 | A RICHIESTA |
| 59272 | STU | 472 | NBR | 90 | 584,3 | 5,99 | A RICHIESTA |
| 59273 | STU | 473 | NBR | 90 | 609,7 | 5,99 | A RICHIESTA |
| 59274 | STU | 474 | NBR | 90 | 635,1 | 5,99 | A RICHIESTA |
| 59275 | STU | 475 | NBR | 90 | 660,5 | 5,99 | A RICHIESTA |

# Bonded Seals

- autocentranti
- STD.

NBR
NBR/INOX
FKM

USS
US

USS = Autocentranti

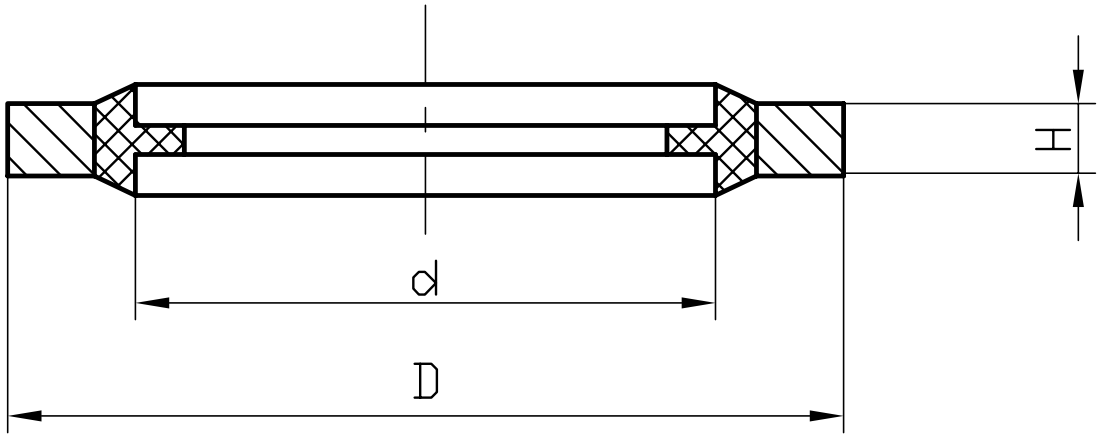


US = Standard

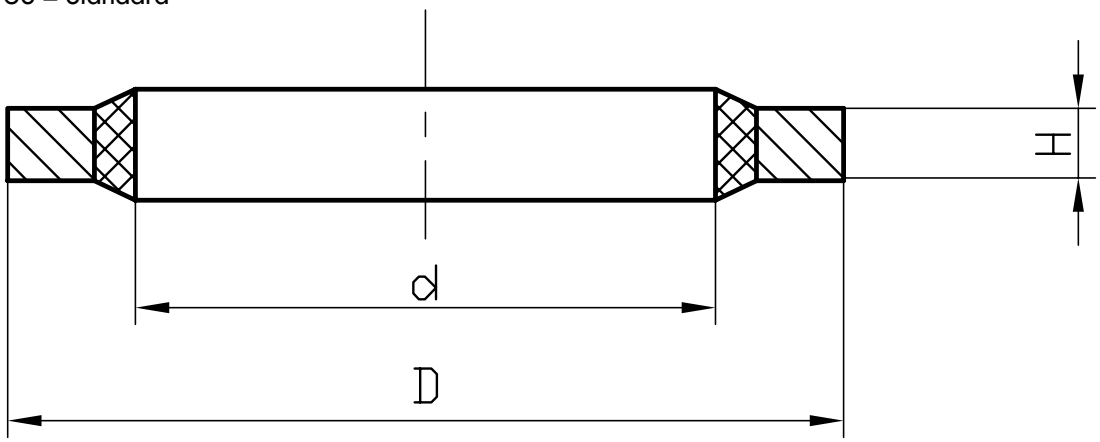

| CODICE | TIPO | SPEC. | MAT. | d mm | D mm | H mm | RIF. | LISTINO 5-2016 X 100 € |
|---|---|---|---|---|---|---|---|---|
| 89091 | USS | 4 | NBR | 4,5 | 7 | 1 | M4 | 37,72 |
| 171414 | USS | | NBR | 5,7 | 9 | 1 | M5 | 37,80 |
| 134211 | USS | | NBR | 6,7 | 10 | 1 | | 37,80 |
| 90384 | USS | | NBR | 6,7 | 11 | 1 | M6 | 37,80 |
| 174526 | USS | | NBR | 8,7 | 13 | 1 | | 41,01 |
| 4007 | USS | 866 | NBR | 8,7 | 14 | 1 | M8 | 41,01 |
| 41648 | USS | 10 | NBR | 10,35 | 16 | 2 | | 48,74 |
| 89096 | USS | 820 | NBR | 10,37 | 15,88 | 2,03 | 1/8” | 50,98 |
| 89100 | USS | 708 | NBR | 10,7 | 16 | 1,5 | M10 | 43,57 |
| 175016 | USS | 12 | NBR | 12,7 | 18 | 1,5 | M12 | 52,93 |
| 174527 | USS | | NBR | 12,7 | 20 | 1,5 | | 55,69 |
| 89087 | USS | 821 | NBR | 13,74 | 20,57 | 2,03 | 1/4” | 54,60 |
| 89098 | USS | 868 | NBR | 14,7 | 22 | 1,5 | M14 | 56,02 |
| 89090 | USS | 870 | NBR | 16,7 | 24 | 1,5 | M16 | 52,78 |
| 89088 | USS | 823 | NBR | 17,28 | 23,8 | 2,03 | 3/8” | 60,46 |
| 45469 | USS | 871 | NBR | 18,16 | 25,4 | 2,34 | | 64,94 |
| 41640 | USS | 872 | NBR | 18,7 | 26 | 1,5 | M18 | 62,81 |
| 41654 | USS | 873 | NBR | 20,7 | 28 | 1,5 | M20 | 57,79 |
| 89095 | USS | 825 | NBR | 21,54 | 28,58 | 2,34 | 1/2” | 75,09 |
| 89094 | USS | 874 | NBR | 22,7 | 30 | 2 | M22 | 79,91 |
| 5467 | USS | 826 | NBR | 23,49 | 31,75 | 2,34 | 5/8” | 81,25 |
| 41647 | USS | 875 | NBR | 24,7 | 32 | 2 | M24 | 81,25 |
| 174530 | USS | | NBR | 26,7 | 35 | 2 | M26 | 133,86 |
| 89089 | USS | 827 | NBR | 27,05 | 34,93 | 2,34 | 3/4” | 88,74 |
| 175018 | USS | | NBR | 27,7 | 36 | 2 | M27 | 125,95 |
| 175019 | USS | | NBR | 30,7 | 39 | 2 | M30 | 137,93 |
| 3979 | USS | 829 | NBR | 30,81 | 38,1 | 2,34 | 7/8” | 93,19 |
| 46171 | USS | 33 | NBR | 33,89 | 42,8 | 2,34 | | 174,75 |
| 89093 | USS | 830 | NBR | 33,89 | 42,8 | 3,25 | 1” | 142,33 |
| 174531 | USS | | NBR | 36,7 | 46 | 2 | M36 | 273,77 |
| 10510 | USS | 832 | NBR | 42,93 | 52,38 | 3,25 | 1 1/4” | 180,08 |
| 90383 | USS | 833 | NBR | 48,44 | 58,6 | 3,25 | 1 1/2” | 197,99 |
| 28789 | USS | 834 | NBR | 54,89 | 69,85 | 3,25 | 1 3/4” | 261,14 |
| 41642 | USS | 836 | NBR | 60,58 | 73,03 | 3,25 | 2” | 289,01 |
| 45473 | USS | 839 | NBR | 76,08 | 90,17 | 3,25 | 2 1/2” | 433,21 |
| 104173 | USS | 879 | NBR | 89,09 | 101,35 | 3,25 | 3” | 971,77 |

| CODICE | TIPO | MAT. | d mm | D mm | H mm | RIF. | LISTINO 5-2016 x100 € |
|---|---|---|---|---|---|---|---|
| 175750 | USS INOX SS304 | NBR | 10,37 | 15,88 | 2 | 1/8” | 211,79 |
| 175751 | USS INOX SS304 | NBR | 13,74 | 20,57 | 2 | M12 1/4” | 230,06 |
| 175752 | USS INOX SS304 | NBR | 16,51 | 25,4 | 2 | M16 | 266,94 |
| 175753 | USS INOX SS304 | NBR | 17,28 | 23,8 | 2 | 3/8” | 260,27 |
| 175754 | USS INOX SS304 | NBR | 18,16 | 25,4 | 2,5 | M18 | 315,87 |
| 175755 | USS INOX SS304 | NBR | 21,54 | 28,58 | 2,5 | M20 1/2” | 333,30 |
| 175756 | USS INOX SS304 | NBR | 23,49 | 31,75 | 2,5 | M22 5/8 | 378,63 |
| 175757 | USS INOX SS304 | NBR | 27,05 | 34,93 | 2,5 | M26 3/4” | 393,15 |
| 175758 | USS INOX SS304 | NBR | 30,81 | 38,1 | 2,5 | M30 7/8” | 435,10 |
| 175759 | USS INOX SS304 | NBR | 33,89 | 42,8 | 3,2 | M33 1” | 872,46 |
| 175761 | USS INOX SS304 | NBR | 42,93 | 52,38 | 3,2 | 1 1/4” | 1.087,24 |
| 175762 | USS INOX SS304 | NBR | 48,84 | 58,6 | 3,2 | 1 1/2”’ | 1.373,31 |
| 175763 | USS INOX SS304 | NBR | 54,89 | 69,85 | 3,2 | 1 3/4” | 1.883,50 |
| 175764 | USS INOX SS304 | NBR | 60,58 | 73,03 | 3,2 | 2” | 1.945,58 |

| CODICE | TIPO | SPEC. | MAT. | d mm | D mm | H mm | RIF. | LISTINO 5-2016 X 100 € |
|---|---|---|---|---|---|---|---|---|
| 68910 | US | 1 | NBR | 3,05 | 6,35 | 1,22 | | 36,40 |
| 68934 | US | 301 | NBR | 3,6 | 7,5 | 1 | | 36,40 |
| 24707 | US | 201 | NBR | 4,1 | 7,2 | 1 | | 34,77 |
| 68911 | US | 2 | NBR | 4,12 | 7,26 | 1,22 | | 36,40 |
| 68905 | US | 202 | NBR | 4,5 | 7 | 1 | | 34,77 |
| 68935 | US | 302 | NBR | 4,6 | 9 | 1 | M4 | 36,40 |
| 62598 | US | 3 | NBR | 5,21 | 8,38 | 1,22 | | 36,95 |
| 68936 | US | 303 | NBR | 5,6 | 10 | 1 | | 36,95 |
| 68906 | US | 203 | NBR | 5,7 | 9 | 1 | M5 | 34,06 |
| 36060 | US | 204 | NBR | 5,7 | 10 | 1 | | 36,95 |
| 69181 | US | 205 | NBR | 6,2 | 9,2 | 1 | | 36,40 |
| 68937 | US | 304 | NBR | 6,6 | 11 | 1 | | 36,95 |
| 65026 | US | 206 | NBR | 6,7 | 10 | 1 | | 36,95 |
| 36059 | US | 207 | NBR | 6,7 | 11 | 1 | M6 | 36,95 |
| 69183 | US | 208 | NBR | 6,7 | 11 | 2,5 | | 46,47 |
| 69202 | US | 305 | NBR | 6,85 | 13,27 | 1,3 | | 38,67 |
| 44934 | US | 4 | NBR | 6,86 | 13,21 | 1,22 | | 41,90 |
| 68912 | US | 5 | NBR | 6,99 | 13,34 | 1,22 | | 41,90 |
| 68938 | US | 306 | NBR | 7 | 11,4 | 1 | | 36,95 |
| 69184 | US | 209 | NBR | 7,1 | 12 | 1 | | 36,95 |
| 39489 | US | 210 | NBR | 7,3 | 10,2 | 1 | | 36,95 |
| 69232 | US | 519 | NBR | 8,3 | 12,7 | 1,25 | | 41,90 |
| 68913 | US | 6 | NBR | 8,31 | 13,34 | 1,22 | | 41,90 |
| 68907 | US | 211 | NBR | 8,5 | 13,4 | 1 | | 37,87 |
| 56719 | US | 307 | NBR | 8,6 | 13 | 1 | | 37,87 |
| 39318 | US | 7 | NBR | 8,64 | 14,22 | 1,22 | M8 | 41,90 |
| 38660 | US | 212 | NBR | 8,7 | 13 | 1 | M8 | 37,87 |
| 68908 | US | 213 | NBR | 8,7 | 14 | 1 | | 37,87 |
| 69185 | US | 214 | NBR | 8,7 | 16 | 1 | | 38,67 |
| 35453 | US | 215 | NBR | 9,3 | 13,3 | 1 | | 37,87 |
| 44738 | US | 216 | NBR | 10,35 | 16 | 2 | | 45,24 |
| 35493 | US | 20 | NBR | 10,37 | 15,88 | 2,03 | 1/8” | 47,20 |
| 69182 | US | 510 | NBR | 10,4 | 14,7 | 1,25 | 1/8” CTP | 41,90 |
| 44013 | US | 217 | NBR | 10,7 | 16 | 1,5 | M10 | 40,55 |
| 40576 | US | 310 | NBR | 10,7 | 17 | 1,5 | | 41,90 |
| 36061 | US | 218 | NBR | 10,7 | 18 | 1,5 | | 41,37 |
| 68914 | US | 8 | NBR | 11,26 | 18,36 | 2,03 | M10 | 48,39 |
| 69186 | US | 219 | NBR | 11,4 | 16,3 | 1,5 | | 40,55 |
| 68915 | US | 9 | NBR | 11,69 | 19,05 | 2,03 | M11 | 48,79 |
| 68939 | US | 312 | NBR | 11,8 | 18,1 | 1,5 | | 42,68 |
| 24710 | US | 220 | NBR | 11,8 | 18,5 | 1,5 | | 43,23 |
| 44739 | US | 221 | NBR | 11,8 | 19,1 | 1,5 | | 43,23 |
| 35454 | US | 222 | NBR | 12,7 | 18 | 1,5 | | 48,79 |
| 68940 | US | 313 | NBR | 12,7 | 19 | 1,5 | | 43,18 |
| 55948 | US | 223 | NBR | 12,7 | 20 | 1,5 | M12 | 44,00 |
| 69187 | US | 224 | NBR | 13,7 | 20 | 1,5 | | 44,00 |
| 69188 | US | 225 | NBR | 13,7 | 22 | 1,5 | | 45,24 |
| 35494 | US | 21 | NBR | 13,74 | 20,57 | 2,03 | M12 1/4” | 50,26 |
| 69189 | US | 315 | NBR | 13,8 | 20,1 | 1,5 | | 44,00 |

| CODICE | TIPO | SPEC. | MAT. | d mm | D mm | H mm | RIF. | LISTINO 5-2016 X 100 € |
|---|---|---|---|---|---|---|---|---|
| 69224 | US | 511 | NBR | 13,85 | 18,7 | 1,25 | 1/4" CTP | 46,03 |
| 35455 | US | 226 | NBR | 14 | 18,7 | 1,5 | | 43,23 |
| 68941 | US | 316 | NBR | 14,7 | 21 | 1,5 | | 44,78 |
| 39320 | US | 227 | NBR | 14,7 | 22 | 1,5 | M14 | 51,73 |
| 68916 | US | 10 | NBR | 14,86 | 22,23 | 2,03 | M14 | 52,10 |
| 68917 | US | 22 | NBR | 15,83 | 22,23 | 2,03 | | 52,10 |
| 69190 | US | 228 | NBR | 16 | 22,7 | 1,5 | | 45,24 |
| 68918 | US | 11 | NBR | 16,51 | 25,4 | 2,03 | M16 | 57,06 |
| 68942 | US | 317 | NBR | 16,7 | 23 | 1,5 | | 46,03 |
| 24709 | US | 229 | NBR | 16,7 | 24 | 1,5 | M16 | 48,79 |
| 69203 | US | 319 | NBR | 17,2 | 23,9 | 2,1 | | 56,02 |
| 35495 | US | 23 | NBR | 17,28 | 23,8 | 2,03 | 3/8" | 56,02 |
| 69225 | US | 512 | NBR | 17,35 | 22,7 | 1,25 | 3/8" CTP | 48,39 |
| 35894 | US | 230 | NBR | 17,4 | 24 | 1,5 | | 48,39 |
| 24708 | US | 231 | NBR | 18 | 24,7 | 1,5 | | 48,79 |
| 68919 | US | 12 | NBR | 18,16 | 25,4 | 2,34 | M18 | 62,81 |
| 44014 | US | 232 | NBR | 18,7 | 26 | 1,5 | M18 | 58,12 |
| 68943 | US | 320 | NBR | 18,7 | 27 | 2 | | 60,11 |
| 68920 | US | 24 | NBR | 19,69 | 26,92 | 2,34 | | 66,41 |
| 44015 | US | 233 | NBR | 20,7 | 28 | 1,5 | M20 | 53,12 |
| 40577 | US | 321 | NBR | 20,7 | 29 | 2 | | 62,11 |
| 63951 | US | 234 | NBR | 21,5 | 28,7 | 2,5 | | 64,75 |
| 39319 | US | 25 | NBR | 21,54 | 28,58 | 2,34 | M20 1/2" | 68,28 |
| 69226 | US | 513 | NBR | 21,65 | 26,7 | 1,25 | 1/2" CTP | 54,20 |
| 69317 | US | 323 | NBR | 21,7 | 30 | 2 | | 67,40 |
| 69191 | US | 235 | NBR | 22,5 | 28 | 1,5 | | 53,12 |
| 37698 | US | 236 | NBR | 22,7 | 30 | 2 | M22 | 72,73 |
| 68909 | US | 237 | NBR | 22,7 | 30 | 3 | | 88,05 |
| 68944 | US | 324 | NBR | 22,7 | 31 | 2 | | 67,40 |
| 68921 | US | 26 | NBR | 23,49 | 31,75 | 2,34 | M22 5/8" | 73,71 |
| 69192 | US | 325 | NBR | 23,7 | 32 | 2 | | 68,28 |
| 68922 | US | 13 | NBR | 24,26 | 33,27 | 2,34 | M24 | 70,96 |
| 35893 | US | 238 | NBR | 24,7 | 32 | 2 | M24 | 68,28 |
| 68945 | US | 326 | NBR | 24,7 | 33 | 2 | | 69,67 |
| 37654 | US | 239 | NBR | 26,7 | 35 | 2 | M26 | 70,96 |
| 69193 | US | 327 | NBR | 27 | 35,3 | 2 | | 72,73 |
| 35497 | US | 27 | NBR | 27,05 | 34,93 | 2,34 | M26 3/4" | 80,56 |
| 38094 | US | 240 | NBR | 27,2 | 36 | 2 | | 71,66 |
| 69227 | US | 514 | NBR | 27,3 | 32,6 | 1,25 | 3/4" CTP | 68,98 |
| 69233 | US | 520 | NBR | 27,3 | 32,6 | 2 | | 71,89 |
| 44419 | US | 328 | NBR | 27,7 | 36 | 2 | | 72,34 |
| 68923 | US | 28 | NBR | 27,82 | 38,61 | 2,34 | M27 | 86,01 |
| 69194 | US | 329 | NBR | 28,6 | 36 | 2 | | 72,34 |
| 24711 | US | 241 | NBR | 28,7 | 37 | 2 | | 73,71 |
| 69195 | US | 330 | NBR | 29,2 | 37,5 | 2 | | 74,39 |
| 68924 | US | 14 | NBR | 29,33 | 36,58 | 2,34 | | 81,94 |
| 40578 | US | 331 | NBR | 30,7 | 39 | 2 | M30 | 77,11 |
| 35498 | US | 29 | NBR | 30,81 | 38,1 | 2,34 | M30 7/8" | 84,63 |
| 24706 | US | 242 | NBR | 31 | 39 | 2 | | 78,52 |

| CODICE | TIPO | SPEC. | MAT. | d mm | D mm | H mm | RIF. | LISTINO 5-2016 X 100 € |
|---|---|---|---|---|---|---|---|---|
| 68925 | US | 15 | NBR | 32,64 | 41,4 | 3,25 | | 116,10 |
| 38392 | US | 243 | NBR | 33,7 | 42 | 2 | M33 | 89,44 |
| 68926 | US | 31 | NBR | 33,89 | 42,8 | 2,34 | M33 1” | 103,13 |
| 35499 | US | 30 | NBR | 33,89 | 42,8 | 3,25 | M33 1” | 128,32 |
| 69228 | US | 515 | NBR | 34,2 | 39,5 | 2 | 1” CTP | 77,82 |
| 39367 | US | 244 | NBR | 34,3 | 43 | 2 | | 91,48 |
| 68927 | US | 16 | NBR | 35,94 | 44,45 | 3,25 | M36 | 133,83 |
| 44918 | US | 245 | NBR | 36,7 | 46 | 2 | M36 | 96,30 |
| 56720 | US | 333 | NBR | 37 | 48 | 2,5 | | 116,75 |
| 68928 | US | 17 | NBR | 38,96 | 47,75 | 3,25 | M38 | 131,10 |
| 35892 | US | 246 | NBR | 40 | 51 | 2,5 | | 123,61 |
| 44937 | US | 247 | NBR | 42,7 | 53 | 3 | M42 | 154,61 |
| 69229 | US | 516 | NBR | 42,8 | 49,5 | 2 | 1 1/4” CTP | 155,64 |
| 35500 | US | 32 | NBR | 42,93 | 52,38 | 3,25 | M42 1 1/4” | 164,58 |
| 68946 | US | 335 | NBR | 43 | 54 | 2,5 | | 152,59 |
| 68929 | US | 18 | NBR | 45,34 | 57,15 | 3,25 | M45 | 181,29 |
| 68947 | US | 336 | NBR | 46 | 57 | 2,5 | | 152,59 |
| 35501 | US | 33 | NBR | 48,44 | 58,6 | 3,25 | 1 1/2” | 179,88 |
| 69230 | US | 517 | NBR | 48,7 | 55,5 | 2 | 1 1/2” CTP | 138,23 |
| 44016 | US | 248 | NBR | 48,7 | 59 | 3 | M48 | 175,13 |
| 44420 | US | 337 | NBR | 49 | 60 | 2,5 | | 159,38 |
| 64617 | US | 19 | NBR | 51,69 | 63,5 | 3,25 | | 188,46 |
| 69196 | US | 249 | NBR | 52 | 60 | 3 | | 178,93 |
| 69197 | US | 250 | NBR | 53,3 | 64,5 | 3 | | 181,98 |
| 60471 | US | 34 | NBR | 54,89 | 69,85 | 3,25 | M52 1 3/4” | 223,27 |
| 69231 | US | 518 | NBR | 60,5 | 68,5 | 2 | 2” CTP | 189,44 |
| 68930 | US | 36 | NBR | 60,58 | 73,03 | 3,25 | 2” | 233,23 |
| 69198 | US | 251 | NBR | 60,7 | 73 | 3 | | 226,01 |
| 68932 | US | 38 | NBR | 66,68 | 79,5 | 3,25 | 2 1/4” | 266,98 |
| 69199 | US | 252 | NBR | 68,6 | 79,5 | 3,5 | | 281,00 |
| 68933 | US | 39 | NBR | 76,08 | 90,17 | 3,25 | 2 1/2” | 394,00 |
| 69200 | US | 253 | NBR | 76,08 | 90,3 | 3,38 | | 331,84 |
| 55921 | US | 254 | NBR | 89,09 | 101,35 | 3,25 | 3” | 459,12 |

| CODICE | TIPO | MAT. | SH. | d mm | D mm | H mm | LISTINO 5-2016 X 100 € |
|---|---|---|---|---|---|---|---|
| 104539 | US | FKM | 70 | 3,05 | 6,35 | 1,2 | 90,27 |
| 175007 | US | FKM | 70 | 3,6 | 6,5 | 1 | 72,32 |
| 175060 | US | FKM | 70 | 3,6 | 7,5 | 1 | 88,91 |
| 175001 | US | FKM | 70 | 3,8 | 7,6 | 1 | 100,91 |
| 104541 | US | FKM | 70 | 4,1 | 7,2 | 1 | 84,58 |
| 104542 | US | FKM | 70 | 4,12 | 7,26 | 1,2 | 92,50 |
| 104543 | US | FKM | 70 | 4,5 | 7 | 1 | 75,38 |
| 104544 | US | FKM | 70 | 4,6 | 9 | 1 | 92,50 |
| 175772 | US | FKM | 70 | 4,9 | 8,6 | 1 | 88,27 |
| 175002 | US | FKM | 70 | 5,1 | 7,8 | 1 | 100,91 |
| 104545 | US | FKM | 70 | 5,21 | 8,38 | 1,2 | 97,82 |
| 104546 | US | FKM | 70 | 5,6 | 10 | 1 | 94,52 |
| 104547 | US | FKM | 70 | 5,7 | 9 | 1 | 81,91 |
| 175061 | US | FKM | 70 | 5,7 | 9,2 | 1 | 82,32 |
| 104548 | US | FKM | 70 | 5,7 | 10 | 1 | 91,19 |
| 175006 | US | FKM | 70 | 6 | 13 | 1 | 105,11 |
| 104549 | US | FKM | 70 | 6,2 | 9,2 | 1 | 97,10 |
| 104550 | US | FKM | 70 | 6,6 | 11 | 1 | 99,10 |
| 104551 | US | FKM | 70 | 6,7 | 10 | 1 | 93,06 |
| 104552 | US | FKM | 70 | 6,7 | 11 | 1 | 89,79 |
| 104553 | US | FKM | 70 | 6,7 | 11 | 2,5 | 126,14 |
| 104554 | US | FKM | 70 | 6,85 | 13,27 | 1,2 | 99,56 |
| 104555 | US | FKM | 70 | 6,86 | 13,21 | 1,2 | 116,19 |
| 104556 | US | FKM | 70 | 6,99 | 13,34 | 1,2 | 116,03 |
| 104557 | US | FKM | 70 | 7 | 11,4 | 1 | 99,55 |
| 104558 | US | FKM | 70 | 7,1 | 12 | 1 | 94,86 |
| 104559 | US | FKM | 70 | 7,3 | 10,2 | 1 | 86,12 |
| 175005 | US | FKM | 70 | 7,8 | 14,9 | 1 | 148,00 |
| 104560 | US | FKM | 70 | 8,3 | 12,7 | 1,2 | 110,64 |
| 104561 | US | FKM | 70 | 8,31 | 13,34 | 1,2 | 116,21 |
| 104562 | US | FKM | 70 | 8,5 | 13,4 | 1 | 101,24 |
| 104563 | US | FKM | 70 | 8,6 | 13 | 1 | 101,96 |
| 104565 | US | FKM | 70 | 8,7 | 13 | 1 | 94,39 |
| 104566 | US | FKM | 70 | 8,7 | 14 | 1 | 93,82 |
| 104567 | US | FKM | 70 | 8,7 | 16 | 1 | 91,50 |
| 104568 | US | FKM | 70 | 9,3 | 13,3 | 1 | 96,04 |
| 104569 | US | FKM | 70 | 10,35 | 16 | 2 | 117,53 |
| 104570 | US | FKM | 70 | 10,37 | 15,88 | 2 | 135,28 |
| 104571 | US | FKM | 70 | 10,4 | 14,7 | 1,2 | 110,66 |
| 104572 | US | FKM | 70 | 10,7 | 16 | 1,5 | 110,92 |
| 104573 | US | FKM | 70 | 10,7 | 17 | 1,5 | 115,38 |
| 104574 | US | FKM | 70 | 10,7 | 18 | 1,5 | 114,11 |
| 104575 | US | FKM | 70 | 11,26 | 18,36 | 2 | 132,86 |
| 104576 | US | FKM | 70 | 11,4 | 16,3 | 1,5 | 105,28 |
| 104577 | US | FKM | 70 | 11,69 | 19,05 | 2 | 141,61 |
| 104578 | US | FKM | 70 | 11,8 | 18,1 | 1,5 | 112,68 |
| 104579 | US | FKM | 70 | 11,8 | 18,5 | 1,5 | 114,71 |
| 104580 | US | FKM | 70 | 11,8 | 19,1 | 1,5 | 114,69 |
| 104581 | US | FKM | 70 | 12,7 | 18 | 1,5 | 113,59 |

| CODICE | TIPO | MAT. | SH. | d mm | D mm | H mm | LISTINO 5-2016 X 100 € |
|---|---|---|---|---|---|---|---|
| 104582 | US | FKM | 70 | 12,7 | 19 | 1,5 | 114,71 |
| 104583 | US | FKM | 70 | 12,7 | 20 | 1,5 | 117,27 |
| 175003 | US | FKM | 70 | 13,2 | 18 | 1,5 | 151,36 |
| 104584 | US | FKM | 70 | 13,7 | 20 | 1,5 | 117,35 |
| 104585 | US | FKM | 70 | 13,7 | 22 | 1,5 | 121,77 |
| 104586 | US | FKM | 70 | 13,74 | 20,57 | 2 | 125,31 |
| 104587 | US | FKM | 70 | 13,8 | 20,1 | 1,5 | 117,73 |
| 104588 | US | FKM | 70 | 13,85 | 18,7 | 1,2 | 130,00 |
| 104589 | US | FKM | 70 | 14 | 18,7 | 1,5 | 110,72 |
| 104590 | US | FKM | 70 | 14,7 | 21 | 1,5 | 119,76 |
| 104591 | US | FKM | 70 | 14,7 | 22 | 1,5 | 150,04 |
| 104592 | US | FKM | 70 | 14,86 | 22,23 | 2 | 153,43 |
| 104593 | US | FKM | 70 | 15,83 | 22,23 | 2 | 146,36 |
| 104594 | US | FKM | 70 | 16 | 22,7 | 1,5 | 115,71 |
| 104595 | US | FKM | 70 | 16,51 | 25,4 | 2 | 162,47 |
| 175062 | US | FKM | 70 | 16,7 | 23 | 1,5 | 130,19 |
| 104597 | US | FKM | 70 | 16,7 | 24 | 1,5 | 117,39 |
| 104598 | US | FKM | 70 | 17,2 | 23,9 | 2 | 158,09 |
| 104599 | US | FKM | 70 | 17,28 | 23,8 | 2 | 157,81 |
| 104600 | US | FKM | 70 | 17,35 | 22,7 | 1,2 | 126,14 |
| 104601 | US | FKM | 70 | 17,4 | 23,7 | 1,5 | 129,72 |
| 104602 | US | FKM | 70 | 17,4 | 24 | 1,5 | 132,42 |
| 104604 | US | FKM | 70 | 18,16 | 25,4 | 2,3 | 182,64 |
| 104605 | US | FKM | 70 | 18,7 | 26 | 1,5 | 163,78 |
| 104606 | US | FKM | 70 | 18,7 | 27 | 2 | 178,98 |
| 104607 | US | FKM | 70 | 19,69 | 26,92 | 2,3 | 205,39 |
| 175004 | US | FKM | 70 | 19,7 | 26 | 1,5 | 174,90 |
| 104608 | US | FKM | 70 | 20,7 | 28 | 1,5 | 149,03 |
| 104609 | US | FKM | 70 | 20,7 | 29 | 2 | 180,58 |
| 104610 | US | FKM | 70 | 21,5 | 28,7 | 2,5 | 196,07 |
| 104611 | US | FKM | 70 | 21,54 | 28,58 | 2,3 | 202,28 |
| 104612 | US | FKM | 70 | 21,65 | 26,7 | 1,2 | 153,38 |
| 104613 | US | FKM | 70 | 21,7 | 30 | 2 | 198,79 |
| 104614 | US | FKM | 70 | 22,5 | 28 | 1,5 | 144,50 |
| 104615 | US | FKM | 70 | 22,7 | 30 | 2 | 226,94 |
| 104616 | US | FKM | 70 | 22,7 | 30 | 3 | 261,69 |
| 104617 | US | FKM | 70 | 22,7 | 31 | 2 | 198,83 |
| 104618 | US | FKM | 70 | 23,49 | 31,75 | 2,3 | 218,64 |
| 104619 | US | FKM | 70 | 23,7 | 32 | 2 | 202,83 |
| 104620 | US | FKM | 70 | 24,26 | 33,27 | 2,3 | 210,91 |
| 104621 | US | FKM | 70 | 24,7 | 32 | 2 | 211,00 |
| 104622 | US | FKM | 70 | 24,7 | 33 | 2 | 207,20 |
| 104623 | US | FKM | 70 | 26,7 | 35 | 2 | 217,89 |
| 104624 | US | FKM | 70 | 27 | 35,3 | 2 | 216,31 |
| 104625 | US | FKM | 70 | 27,05 | 34,93 | 2,3 | 251,41 |
| 104626 | US | FKM | 70 | 27,2 | 36 | 2 | 223,93 |
| 104627 | US | FKM | 70 | 27,3 | 32,6 | 1,2 | 204,84 |
| 104628 | US | FKM | 70 | 27,3 | 32,6 | 2 | 181,64 |
| 104629 | US | FKM | 70 | 27,7 | 36 | 2 | 215,27 |

| CODICE | TIPO | MAT. | SH. | d mm | D mm | H mm | LISTINO 5-2016 X 100 € |
|---|---|---|---|---|---|---|---|
| 104630 | US | FKM | 70 | 27,82 | 38,61 | 2,3 | 255,65 |
| 104631 | US | FKM | 70 | 28,6 | 36 | 2 | 215,27 |
| 104632 | US | FKM | 70 | 28,7 | 37 | 2 | 219,04 |
| 104633 | US | FKM | 70 | 29,2 | 37,5 | 2 | 220,94 |
| 104634 | US | FKM | 70 | 29,33 | 36,58 | 2,3 | 243,53 |
| 104636 | US | FKM | 70 | 30,81 | 38,1 | 2,3 | 251,60 |
| 104637 | US | FKM | 70 | 31 | 39 | 2 | 227,71 |
| 104638 | US | FKM | 70 | 32,64 | 41,4 | 3,2 | 345,10 |
| 104332 | US | FKM | 70 | 33,7 | 42 | 2 | 279,02 |
| 104639 | US | FKM | 70 | 33,89 | 42,8 | 2,3 | 320,35 |
| 104640 | US | FKM | 70 | 33,89 | 42,8 | 3,2 | 391,41 |
| 104641 | US | FKM | 70 | 34,2 | 39,5 | 2 | 231,42 |
| 104642 | US | FKM | 70 | 34,3 | 43 | 2 | 271,79 |
| 104643 | US | FKM | 70 | 35,94 | 44,45 | 3,2 | 397,92 |
| 104644 | US | FKM | 70 | 36,7 | 46 | 2 | 286,24 |
| 104645 | US | FKM | 70 | 37 | 48 | 2,5 | 347,13 |
| 104646 | US | FKM | 70 | 38,96 | 47,75 | 3,2 | 408,88 |
| 104334 | US | FKM | 70 | 40 | 51 | 2,5 | 367,31 |
| 104647 | US | FKM | 70 | 42,7 | 53 | 3 | 462,50 |
| 104648 | US | FKM | 70 | 42,8 | 49,5 | 2 | 306,43 |
| 104649 | US | FKM | 70 | 42,93 | 52,38 | 3,2 | 511,73 |
| 104650 | US | FKM | 70 | 43 | 54 | 2,5 | 396,91 |
| 104651 | US | FKM | 70 | 45,34 | 57,15 | 3,2 | 565,44 |
| 104652 | US | FKM | 70 | 46 | 57 | 2,5 | 453,42 |
| 104653 | US | FKM | 70 | 48,44 | 58,6 | 3,2 | 560,61 |
| 104654 | US | FKM | 70 | 48,7 | 55,5 | 2 | 410,70 |
| 104655 | US | FKM | 70 | 48,7 | 59 | 3 | 520,72 |
| 104656 | US | FKM | 70 | 49 | 60 | 2,5 | 529,77 |
| 104657 | US | FKM | 70 | 51,69 | 63,5 | 3,2 | 560,04 |
| 104658 | US | FKM | 70 | 52 | 60 | 3 | 531,80 |
| 104659 | US | FKM | 70 | 53,3 | 64,5 | 3 | 555,00 |
| 104660 | US | FKM | 70 | 54,89 | 69,85 | 3,2 | 663,63 |
| 104661 | US | FKM | 70 | 58,04 | 70,36 | 3,2 | 675,76 |
| 104662 | US | FKM | 70 | 60,5 | 68,5 | 2 | 563,07 |
| 104663 | US | FKM | 70 | 60,58 | 73,03 | 3,2 | 693,16 |
| 104664 | US | FKM | 70 | 60,7 | 73 | 3 | 681,14 |
| 104665 | US | FKM | 70 | 64,39 | 77,72 | 3,2 | 774,31 |
| 104666 | US | FKM | 70 | 66,68 | 79,5 | 3,2 | 1.009,09 |
| 104667 | US | FKM | 70 | 68,6 | 79,5 | 3,5 | 835,19 |
| 104668 | US | FKM | 70 | 76,08 | 90,17 | 3,2 | 1.177,27 |
| 104669 | US | FKM | 70 | 76,08 | 90,3 | 3,5 | 986,20 |

| CODICE | TIPO | SPEC. | MAT. | d mm | D mm | H mm | RIF. | LISTINO 5-2016 X 100 € |
|---|---|---|---|---|---|---|---|---|
| 117619 | US INOX | 201 | NBR | 4,1 | 7,2 | 1 | | 140,60 |
| 125704 | US INOX | 202 | NBR | 4,5 | 7 | 1 | | 124,41 |
| 175201 | US INOX | 003 | NBR | 5,21 | 8,38 | 1,22 | | 143,78 |
| 121781 | US INOX | 203 | NBR | 5,7 | 9 | 1 | M5 | 126,82 |
| 175187 | US INOX | 204 | NBR | 5,7 | 10 | 1 | | 143,78 |
| 175188 | US INOX | 205 | NBR | 6,2 | 9,2 | 1 | | 140,60 |
| 125725 | US INOX | 304 | NBR | 6,6 | 11 | 1 | | 138,96 |
| 121768 | US INOX | 206 | NBR | 6,7 | 10 | 1 | | 144,21 |
| 151893 | US INOX | 207 | NBR | 6,7 | 11 | 1 | M6 | 143,78 |
| 155663 | US INOX | 004 | NBR | 6,86 | 13,21 | 1,22 | | 177,15 |
| 175189 | US INOX | 210 | NBR | 7,3 | 10,2 | 1 | | 143,78 |
| 175322 | US INOX | 006 | NBR | 8,31 | 13,34 | 1,22 | | 177,70 |
| 175190 | US INOX | 211 | NBR | 8,5 | 13,4 | 1 | | 148,15 |
| 134362 | US INOX | 007 | NBR | 8,64 | 14,22 | 1,22 | M8 | 167,96 |
| 159580 | US INOX | 212 | NBR | 8,7 | 13 | 1 | M8 | 148,15 |
| 89092 | US INOX | 213 | NBR | 8,7 | 14 | 1 | | 148,15 |
| 175202 | US INOX | 020 | NBR | 10,37 | 15,88 | 2,03 | 1/8” | 196,08 |
| 125726 | US INOX | 217 | NBR | 10,7 | 16 | 1,5 | M10 | 160,41 |
| 115860 | US INOX | 218 | NBR | 10,7 | 18 | 1,5 | | 204,00 |
| 175191 | US INOX | 222 | NBR | 12,7 | 18 | 1,5 | | 205,16 |
| 155625 | US INOX | 223 | NBR | 12,7 | 20 | 1,5 | M12 | 197,33 |
| 175193 | US INOX | 224 | NBR | 13,7 | 20 | 1,5 | | 188,53 |
| 175192 | US INOX | 225 | NBR | 13,7 | 22 | 1,5 | | 194,98 |
| 175203 | US INOX | 021 | NBR | 13,74 | 20,57 | 2,03 | M12 1/4” | 212,82 |
| 125649 | US INOX | 316 | NBR | 14,7 | 21 | 1,5 | | 216,83 |
| 175194 | US INOX | 227 | NBR | 14,7 | 22 | 1,5 | M14 | 219,17 |
| 175195 | US INOX | 228 | NBR | 16 | 22,7 | 1,5 | | 185,25 |
| 175204 | US INOX | 011 | NBR | 16,51 | 25,4 | 2,03 | | 247,18 |
| 124715 | US INOX | 229 | NBR | 16,7 | 24 | 1,5 | M16 | 216,10 |
| 175205 | US INOX | 023 | NBR | 17,28 | 23,8 | 2,03 | 3/8” | 240,72 |
| 175196 | US INOX | 230 | NBR | 17,4 | 24 | 1,5 | | 212,71 |
| 175206 | US INOX | 012 | NBR | 18,16 | 25,4 | 2,34 | | 292,48 |
| 170827 | US INOX | 232 | NBR | 18,7 | 26 | 1,5 | M18 | 266,65 |
| 84606 | US INOX | 025 | NBR | 21,54 | 28,58 | 2,34 | M20 1/2” | 308,56 |
| 175197 | US INOX | 235 | NBR | 22,5 | 28 | 1,5 | | 238,53 |
| 175198 | US INOX | 236 | NBR | 22,7 | 30 | 2 | M22 | 346,31 |
| 175207 | US INOX | 026 | NBR | 23,49 | 31,75 | 2,34 | M22 5/8 | 350,58 |
| 172487 | US INOX | 238 | NBR | 24,7 | 32 | 2 | M24 | 434,17 |
| 143618 | US INOX | 239 | NBR | 26,7 | 35 | 2 | M26 | 337,78 |
| 175208 | US INOX | 027 | NBR | 27,05 | 34,93 | 2,34 | M26 3/4” | 364,04 |
| 175199 | US INOX | 241 | NBR | 28,7 | 37 | 2 | | 350,58 |
| 175209 | US INOX | 029 | NBR | 30,81 | 38,1 | 2,34 | M30 7/8” | 402,88 |
| 175200 | US INOX | 243 | NBR | 33,7 | 42 | 2 | M33 | 425,42 |
| 175210 | US INOX | 030 | NBR | 33,89 | 42,8 | 3,25 | M33 1” | 807,84 |
| 135232 | US INOX | 244 | NBR | 34,3 | 43 | 2 | | 435,16 |
| 175211 | US INOX | 017 | NBR | 38,96 | 47,75 | 3,25 | | 942,53 |
| 143619 | US INOX | 247 | NBR | 42,7 | 53 | 3 | | 740,55 |
| 175212 | US INOX | 032 | NBR | 42,93 | 52,38 | 3,25 | M42 1 1/4” | 1.211,81 |
| 175213 | US INOX | 033 | NBR | 48,44 | 58,6 | 3,25 | 1 1/2” | 1.346,40 |
| 108501 | US INOX | 248 | NBR | 48,7 | 59 | 3 | M48 | 1.377,48 |

# Coperchi di chiusura

NBR

VER

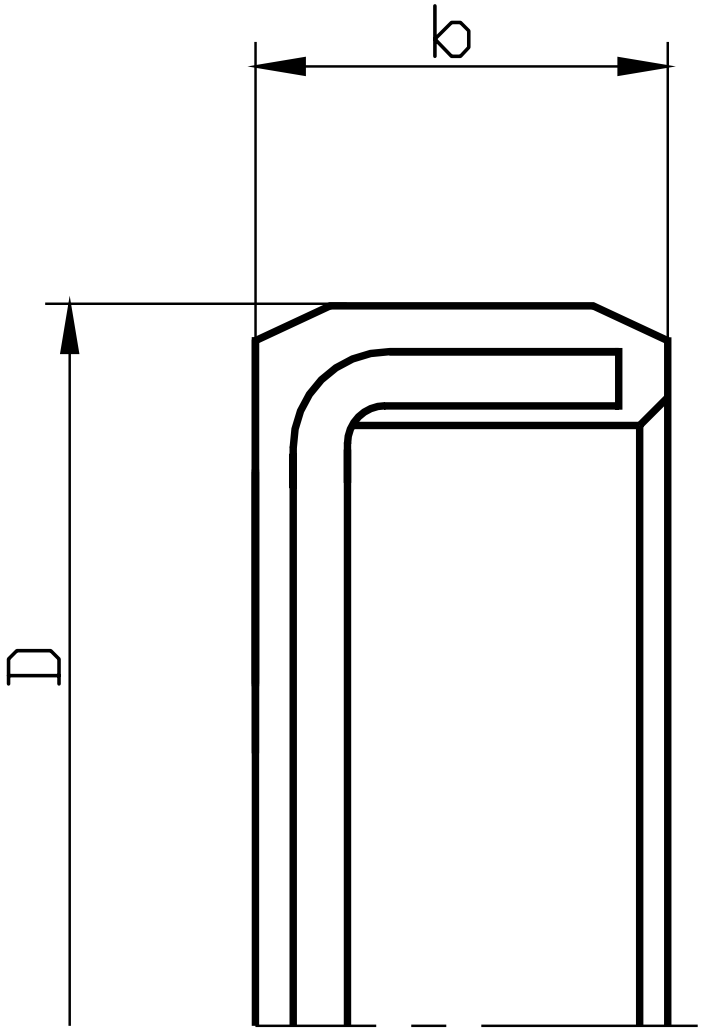
b
h

| CODICE | TIPO | MAT. | D mm | b mm | LISTINO 5-2016 X 100 € |
|---|---|---|---|---|---|
| 70484 | VER | NBR | 13 | 4,5 | 123,50 |
| 70487 | VER | NBR | 19 | 7 | 123,50 |
| 70489 | VER | NBR | 20 | 4 | 123,50 |
| 70491 | VER | NBR | 22 | 4 | 123,50 |
| 58906 | VER | NBR | 22 | 7 | 123,50 |
| 118153 | VER | NBR | 25 | 7 | 123,50 |
| 55893 | VER | NBR | 26 | 4 | 123,50 |
| 130618 | VER | NBR | 26 | 7 | 123,50 |
| 70493 | VER | NBR | 28 | 4 | 131,47 |
| 56946 | VER | NBR | 28 | 7 | 131,47 |
| 66369 | VER | NBR | 30 | 5 | 131,47 |
| 43363 | VER | NBR | 30 | 7 | 138,11 |
| 70494 | VER | NBR | 32 | 7 | 138,11 |
| 130619 | VER | NBR | 35 | 5 | 146,08 |
| 70495 | VER | NBR | 35 | 7 | 146,08 |
| 24249 | VER | NBR | 35 | 8 | 146,08 |
| 70497 | VER | NBR | 37 | 5 | 146,08 |
| 130620 | VER | NBR | 37 | 7 | 162,01 |
| 34908 | VER | NBR | 40 | 7 | 162,01 |
| 70498 | VER | NBR | 42 | 7 | 162,01 |
| 84133 | VER | NBR | 45 | 7 | 169,98 |
| 70499 | VER | NBR | 47 | 7 | 169,98 |
| 24173 | VER | NBR | 47 | 10 | 169,98 |
| 90042 | VER | NBR | 50 | 10 | 176,62 |
| 70503 | VER | NBR | 52 | 7 | 176,62 |
| 24174 | VER | NBR | 52 | 10 | 176,62 |
| 36520 | VER | NBR | 55 | 10 | 192,56 |
| 81544 | VER | NBR | 60 | 8 | 192,56 |
| 70505 | VER | NBR | 62 | 7 | 192,56 |
| 70506 | VER | NBR | 62 | 10 | 192,56 |
| 58913 | VER | NBR | 68 | 8 | 277,55 |
| 70509 | VER | NBR | 72 | 10 | 277,55 |
| 58914 | VER | NBR | 75 | 7 | 316,06 |
| 70510 | VER | NBR | 80 | 10 | 316,06 |
| 130621 | VER | NBR | 85 | 10 | 346,60 |
| 70511 | VER | NBR | 90 | 10 | 385,11 |
| 70512 | VER | NBR | 100 | 10 | 446,20 |
| 70513 | VER | NBR | 110 | 10 | 492,68 |
| 58919 | VER | NBR | 120 | 12 | 610,87 |
| 58920 | VER | NBR | 125 | 12 | 733,05 |
| 58921 | VER | NBR | 130 | 12 | 884,43 |
| 58922 | VER | NBR | 140 | 15 | 916,31 |
| 84936 | VER | NBR | 145 | 12 | 956,15 |
| 58923 | VER | NBR | 150 | 15 | 1.195,18 |
| 130624 | VER | NBR | 160 | 12 | 1.415,63 |
| 130625 | VER | NBR | 170 | 12 | 1.739,65 |
| 58927 | VER | NBR | 180 | 12 | 1.806,05 |
| 58928 | VER | NBR | 200 | 13 | 2.257,57 |

# Corda

EPDM 70
FKM 75
NBR 70
SIL 60

RS

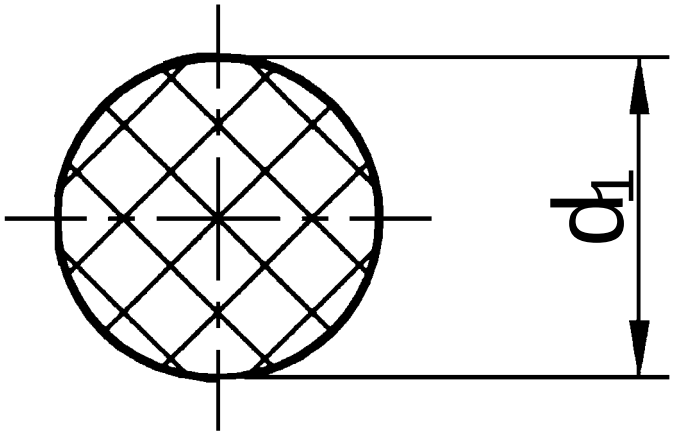
d1

| CODICE | TIPO | MAT. | SHORE | d1 mm | LISTINO 5-2016 X 100 mt € |
|---|---|---|---|---|---|
| 89343 | RS | EP | 70 | 1,55 | 121,53 |
| 89323 | RS | EP | 70 | 1,78 | 150,45 |
| 26596 | RS | EP | 70 | 2 | 156,24 |
| 20613 | RS | EP | 70 | 2,4 | 202,55 |
| 89324 | RS | EP | 70 | 2,5 | 214,10 |
| 89325 | RS | EP | 70 | 2,62 | 219,89 |
| 20609 | RS | EP | 70 | 3 | 231,47 |
| 89326 | RS | EP | 70 | 3,2 | 254,61 |
| 89327 | RS | EP | 70 | 3,5 | 306,70 |
| 69675 | RS | EP | 70 | 4 | 318,27 |
| 89328 | RS | EP | 70 | 4,5 | 347,19 |
| 20610 | RS | EP | 70 | 5 | 370,35 |
| 89329 | RS | EP | 70 | 5,33 | 434,00 |
| 20612 | RS | EP | 70 | 5,7 | 445,57 |
| 75789 | RS | EP | 70 | 6 | 451,36 |
| 89330 | RS | EP | 70 | 6,35 | 457,15 |
| 44741 | RS | EP | 70 | 7 | 468,72 |
| 49587 | RS | EP | 70 | 7,5 | 491,87 |
| 75790 | RS | EP | 70 | 8 | 520,80 |
| 89331 | RS | EP | 70 | 8,4 | 555,51 |
| 21628 | RS | EP | 70 | 9 | 694,41 |
| 75791 | RS | EP | 70 | 10 | 781,20 |
| 89332 | RS | EP | 70 | 11 | 1.070,54 |
| 75792 | RS | EP | 70 | 12 | 1.359,86 |
| 89333 | RS | EP | 70 | 13 | 1.631,83 |
| 89334 | RS | EP | 70 | 14 | 1.909,59 |
| 34975 | RS | EP | 70 | 15 | 2.083,18 |
| 89335 | RS | EP | 70 | 16 | 2.430,39 |
| 89336 | RS | EP | 70 | 18 | 3.211,58 |
| 89337 | RS | EP | 70 | 20 | 4.021,71 |

| CODICE | NUOVO CODICE | TIPO | MAT. | SHORE | d1 mm | LISTINO 5-2016 X 1 mt € |
|---|---|---|---|---|---|---|
| 7834 | 191839 | RS | FKM | 75 | 1,5 | 4,28 |
| 45379 | 191840 | RS | FKM | 75 | 1,6 | 4,28 |
| 75935 | 191841 | RS | FKM | 75 | 1,78 | 4,28 |
| 20552 | 191842 | RS | FKM | 75 | 2 | 4,71 |
| 20579 | 191843 | RS | FKM | 75 | 2,4 | 4,86 |
| 20553 | 191844 | RS | FKM | 75 | 2,5 | 4,86 |
| 20554 | 187836 | RS | FKM | 75 | 2,62 | 5,13 |
| 20555 | 191845 | RS | FKM | 75 | 3 | 6,64 |
| == | 191846 | RS | FKM | 75 | 3,2 | 7,11 |
| 20557 | 191847 | RS | FKM | 75 | 3,53 | 7,58 |
| 20558 | 187838 | RS | FKM | 75 | 4 | 8,33 |
| 20580 | 191848 | RS | FKM | 75 | 4,5 | 11,09 |
| 20559 | 192258 | RS | FKM | 75 | 5 | 12,96 |
| 20560 | 189877 | RS | FKM | 75 | 5,33 | 14,94 |
| 20584 | 192259 | RS | FKM | 75 | 5,5 | 15,23 |
| 20578 | 192259 | RS | FKM | 75 | 5,7 | 17,21 |
| 20561 | 191849 | RS | FKM | 75 | 6 | 18,79 |
| 20588 | 192260 | RS | FKM | 75 | 6,35 | 21,94 |
| 20583 | 192260 | RS | FKM | 75 | 6,5 | 22,68 |
| 20563 | 192261 | RS | FKM | 75 | 7 | 25,48 |
| 20586 | 192262 | RS | FKM | 75 | 7,5 | 32,67 |
| 20564 | 192263 | RS | FKM | 75 | 8 | 33,30 |
| 20565 | 192264 | RS | FKM | 75 | 8,4 | 42,03 |
| 20566 | 192265 | RS | FKM | 75 | 9 | 43,84 |
| 20915 | 192266 | RS | FKM | 75 | 9,5 | 51,03 |
| 20567 | 191850 | RS | FKM | 75 | 10 | 52,07 |
| 20568 | 190054 | RS | FKM | 75 | 11 | 71,23 |
| 20569 | 190267 | RS | FKM | 75 | 12 | 75,80 |
| 20570 | 192268 | RS | FKM | 75 | 13 | 88,02 |
| 20582 | 192269 | RS | FKM | 75 | 14 | 120,12 |
| 20571 | 192270 | RS | FKM | 75 | 15 | 132,24 |
| 20572 | 192271 | RS | FKM | 75 | 16 | 156,90 |
| 20573 | 192273 | RS | FKM | 75 | 18 | 188,62 |
| 20574 | 192274 | RS | FKM | 75 | 20 | 245,12 |

| CODICE | TIPO | MAT. | SHORE | d1 mm | LISTINO 5-2016 X 100mt € |
|---|---|---|---|---|---|
| 69718 | RS | NBR | 70 | 1 | 194,30 |
| 93304 | RS | NBR | 70 | 1,5 | 47,79 |
| 40664 | RS | NBR | 70 | 1,55 | 55,45 |
| 40615 | RS | NBR | 70 | 1,6 | 55,45 |
| 20541 | RS | NBR | 70 | 1,78 | 71,00 |
| 20514 | RS | NBR | 70 | 2 | 71,75 |
| 20542 | RS | NBR | 70 | 2,4 | 80,65 |
| 20515 | RS | NBR | 70 | 2,5 | 82,08 |
| 20516 | RS | NBR | 70 | 2,62 | 82,97 |
| 20517 | RS | NBR | 70 | 3 | 91,98 |
| 20547 | RS | NBR | 70 | 3,2 | 106,12 |
| 20519 | RS | NBR | 70 | 3,5/53 | 120,25 |
| 20520 | RS | NBR | 70 | 4 | 129,21 |
| 20543 | RS | NBR | 70 | 4,5 | 157,60 |
| 20521 | RS | NBR | 70 | 5 | 174,42 |
| 20522 | RS | NBR | 70 | 5,33/5 | 174,42 |
| 20540 | RS | NBR | 70 | 5,7 | 224,94 |
| 20523 | RS | NBR | 70 | 6 | 253,03 |
| 20550 | RS | NBR | 70 | 6,35/5 | 272,69 |
| 20524 | RS | NBR | 70 | 6,99/7 | 339,09 |
| 20548 | RS | NBR | 70 | 7,5 | 383,90 |
| 20526 | RS | NBR | 70 | 8 | 420,31 |
| 20527 | RS | NBR | 70 | 8,4 | 460,34 |
| 20528 | RS | NBR | 70 | 9 | 547,62 |
| 59561 | RS | NBR | 70 | 9,5 | 653,07 |
| 20529 | RS | NBR | 70 | 10 | 663,01 |
| 20530 | RS | NBR | 70 | 11 | 717,82 |
| 20531 | RS | NBR | 70 | 12 | 898,91 |
| 20532 | RS | NBR | 70 | 13 | 1.073,33 |
| 20544 | RS | NBR | 70 | 14 | 1.251,92 |
| 20533 | RS | NBR | 70 | 15 | 1.351,54 |
| 20534 | RS | NBR | 70 | 16 | 1.891,39 |
| 20535 | RS | NBR | 70 | 18 | 2.319,07 |
| 144156 | RS | NBR | 70 | 19 | 2.498,00 |
| 20536 | RS | NBR | 70 | 20 | 2.681,30 |
| 20537 | RS | NBR | 70 | 22 | 3.249,05 |
| 20538 | RS | NBR | 70 | 25 | 3.967,12 |
| 20539 | RS | NBR | 70 | 30 | 6.829,96 |

| CODICE | TIPO | MAT. | SHORE | d1 mm | LISTINO 5-2016 X 100mt € |
|---|---|---|---|---|---|
| 59582 | RS | SIL | 60 | 1,5 | 89,01 |
| 59593 | RS | SIL | 60 | 1,6 | 100,13 |
| 59583 | RS | SIL | 60 | 1,78 | 111,27 |
| 35392 | RS | SIL | 60 | 2 | 122,38 |
| 59594 | RS | SIL | 60 | 2,4 | 133,53 |
| 59598 | RS | SIL | 60 | 2,5 | 144,65 |
| 59595 | RS | SIL | 60 | 2,62 | 155,77 |
| 26557 | RS | SIL | 60 | 3 | 166,90 |
| 35955 | RS | SIL | 60 | 3,5 | 239,24 |
| 20599 | RS | SIL | 60 | 4 | 287,42 |
| 35393 | RS | SIL | 60 | 4,5 | 319,11 |
| 37442 | RS | SIL | 60 | 5 | 370,26 |
| 37443 | RS | SIL | 60 | 5,33 | 437,55 |
| 59584 | RS | SIL | 60 | 5,5 | 459,53 |
| 39806 | RS | SIL | 60 | 5,7 | 503,14 |
| 37198 | RS | SIL | 60 | 6 | 525,18 |
| 59585 | RS | SIL | 60 | 6,5 | 631,44 |
| 59597 | RS | SIL | 60 | 6,99/7 | 729,34 |
| 37053 | RS | SIL | 60 | 7,5 | 825,35 |
| 36174 | RS | SIL | 60 | 8 | 906,84 |
| 59586 | RS | SIL | 60 | 8,5 | 1.024,76 |
| 36175 | RS | SIL | 60 | 9 | 1.146,56 |
| 37869 | RS | SIL | 60 | 10 | 1.408,07 |
| 59587 | RS | SIL | 60 | 11 | 1.692,09 |
| 37410 | RS | SIL | 60 | 12 | 2.019,50 |
| 44686 | RS | SIL | 60 | 13 | 2.358,83 |
| 59588 | RS | SIL | 60 | 14 | 2.742,72 |
| 59526 | RS | SIL | 60 | 15 | 3.143,28 |
| 44572 | RS | SIL | 60 | 16 | 3.582,75 |
| 59590 | RS | SIL | 60 | 18 | 4.539,62 |
| 59592 | RS | SIL | 60 | 20 | 5.591,11 |

# Guarnizioni per flange SAE J 518

TPU

FLA

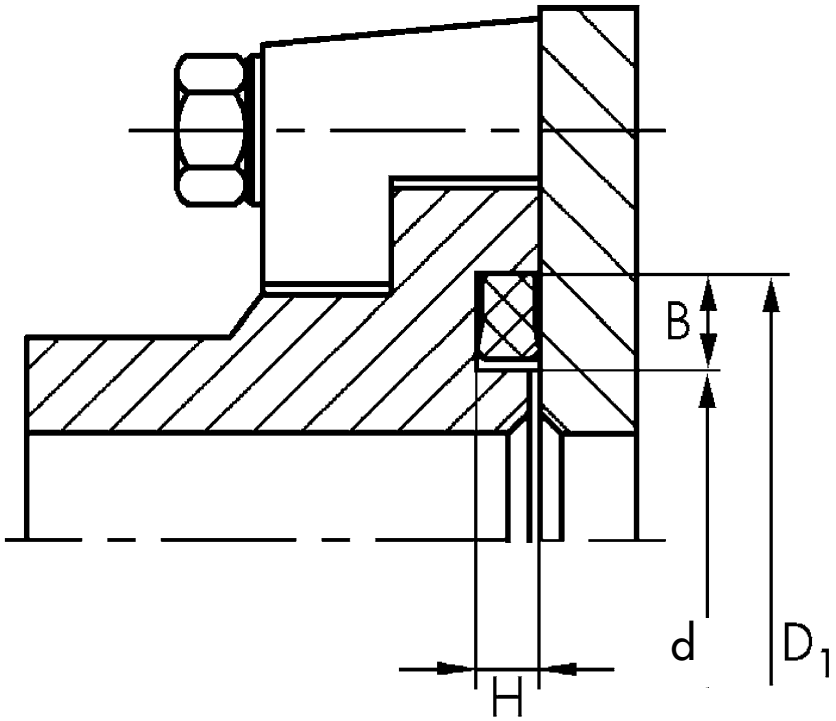
B
d
D1
H

# GUARNIZIONI PER FLANGE SAE J 518

| CODICE | TIPO | MAT. | FLANGIA SAE | d mm | D1 mm | B mm | H mm | LISTINO 5-2016 x1 € |
|---|---|---|---|---|---|---|---|---|
| 148790 | GUARNIZIONI PER FLANGE SAE J 518 | TPU | 1/2” | 17 | 25,4 | 4,2 | 2,85 | 2,13 |
| 148791 | GUARNIZIONI PER FLANGE SAE J 518 | TPU | 3/4” | 23,4 | 31,8 | 4,2 | 2,85 | 2,24 |
| 148792 | GUARNIZIONI PER FLANGE SAE J 518 | TPU | 1” | 31,3 | 39,7 | 4,2 | 2,85 | 2,35 |
| 148793 | GUARNIZIONI PER FLANGE SAE J 518 | TPU | 1 1/4” | 36,1 | 44,5 | 4,2 | 2,85 | 2,47 |
| 148794 | GUARNIZIONI PER FLANGE SAE J 518 | TPU | 1 1/2” | 45,4 | 53,8 | 4,2 | 2,85 | 2,63 |
| 148795 | GUARNIZIONI PER FLANGE SAE J 518 | TPU | 2” | 55 | 63,4 | 4,2 | 2,85 | 2,74 |

# O-Ring

EPDM 70 PEROX
FKM 75 FDA
FKM 75 VERDE
FKM 80
NBR 70
SIL 70 - NBR 90 - EPDM 70

OR

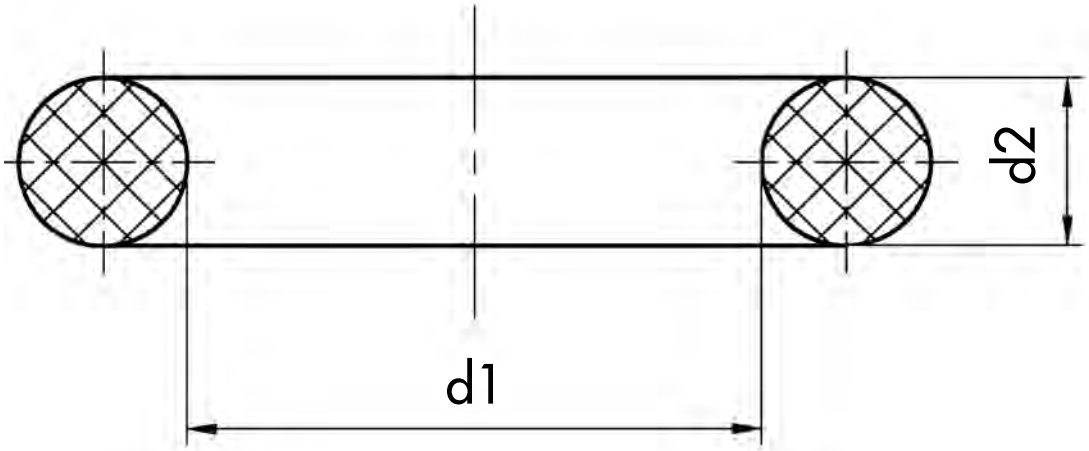
d2
d1

| CODICE | TIPO | d1 mm | d2 mm | MAT. | SH | MAT | CONFEZIONAMENTO | | LISTINO 5-2016 X 100 € |
|---|---|---|---|---|---|---|---|---|---|
| 189446 | OR | 1,78 | 1,78 | EPDM | 70 | PEROX | - | 20000 | 7,84 |
| 190087 | OR | 1,78 | 1,78 | EPDM | 70 | PEROX | PACK | 750 | 8,87 |
| 189448 | OR | 2 | 1 | EPDM | 70 | PEROX | - | 20000 | 9,58 |
| 190173 | OR | 2 | 1 | EPDM | 70 | PEROX | PACK | 1000 | 10,87 |
| 189450 | OR | 2,57 | 1,78 | EPDM | 70 | PEROX | - | 20000 | 7,84 |
| 190178 | OR | 2,57 | 1,78 | EPDM | 70 | PEROX | PACK | 750 | 8,87 |
| 191899 | OR | 2,6 | 1,9 | EPDM | 70 | PEROX | - | 20000 | 7,84 |
| 191968 | OR | 2,6 | 1,9 | EPDM | 70 | PEROX | PACK | 750 | 8,87 |
| 189451 | OR | 2,9 | 1,78 | EPDM | 70 | PEROX | - | 20000 | 7,84 |
| 190088 | OR | 2,9 | 1,78 | EPDM | 70 | PEROX | PACK | 750 | 8,87 |
| 191900 | OR | 3,4 | 1,9 | EPDM | 70 | PEROX | - | 20000 | 7,84 |
| 191969 | OR | 3,4 | 1,9 | EPDM | 70 | PEROX | PACK | 750 | 8,87 |
| 189452 | OR | 3,5 | 1,5 | EPDM | 70 | PEROX | - | 20000 | 7,84 |
| 190174 | OR | 3,5 | 1,5 | EPDM | 70 | PEROX | PACK | 750 | 8,88 |
| 193073 | OR | 3,63 | 2,62 | EPDM | 70 | PEROX | - | 15000 | 9,41 |
| 193607 | OR | 3,63 | 2,62 | EPDM | 70 | PEROX | PACK | 500 | 10,28 |
| 189468 | OR | 3,68 | 1,78 | EPDM | 70 | PEROX | - | 20000 | 7,84 |
| 190179 | OR | 3,68 | 1,78 | EPDM | 70 | PEROX | PACK | 750 | 8,87 |
| 189453 | OR | 4 | 1 | EPDM | 70 | PEROX | - | 20000 | 9,75 |
| 190091 | OR | 4 | 1 | EPDM | 70 | PEROX | PACK | 500 | 11,09 |
| 189498 | OR | 4,2 | 1,9 | EPDM | 70 | PEROX | - | 20000 | 7,84 |
| 190181 | OR | 4,2 | 1,9 | EPDM | 70 | PEROX | PACK | 750 | 8,87 |
| 192965 | OR | 4,42 | 2,62 | EPDM | 70 | PEROX | - | 15000 | 10,45 |
| 193609 | OR | 4,42 | 2,62 | EPDM | 70 | PEROX | PACK | 500 | 11,50 |
| 189469 | OR | 4,47 | 1,78 | EPDM | 70 | PEROX | - | 20000 | 7,84 |
| 190180 | OR | 4,47 | 1,78 | EPDM | 70 | PEROX | PACK | 750 | 8,87 |
| 191901 | OR | 4,9 | 1,9 | EPDM | 70 | PEROX | - | 20000 | 8,19 |
| 191970 | OR | 4,9 | 1,9 | EPDM | 70 | PEROX | PACK | 750 | 9,22 |
| 189454 | OR | 5 | 1 | EPDM | 70 | PEROX | - | 20000 | 9,58 |
| 190183 | OR | 5 | 1 | EPDM | 70 | PEROX | PACK | 500 | 10,92 |
| 189461 | OR | 5 | 1,5 | EPDM | 70 | PEROX | - | 20000 | 7,84 |
| 190085 | OR | 5 | 1,5 | EPDM | 70 | PEROX | PACK | 750 | 8,87 |
| 189500 | OR | 5 | 2 | EPDM | 70 | PEROX | - | 20000 | 8,71 |
| 190182 | OR | 5 | 2 | EPDM | 70 | PEROX | PACK | 750 | 9,74 |
| 193074 | OR | 5,23 | 2,62 | EPDM | 70 | PEROX | - | 7500 | 9,41 |
| 193608 | OR | 5,23 | 2,62 | EPDM | 70 | PEROX | PACK | 500 | 10,28 |
| 189470 | OR | 5,28 | 1,78 | EPDM | 70 | PEROX | - | 10000 | 8,72 |
| 190089 | OR | 5,28 | 1,78 | EPDM | 70 | PEROX | PACK | 750 | 9,72 |
| 191902 | OR | 5,7 | 1,9 | EPDM | 70 | PEROX | - | 10000 | 8,19 |
| 191971 | OR | 5,7 | 1,9 | EPDM | 70 | PEROX | PACK | 750 | 9,23 |
| 192460 | OR | 5,94 | 3,53 | EPDM | 70 | PEROX | - | 5000 | 20,90 |
| 192461 | OR | 5,94 | 3,53 | EPDM | 70 | PEROX | PACK | 250 | 23,30 |
| 189455 | OR | 6 | 1 | EPDM | 70 | PEROX | - | 20000 | 9,58 |
| 190184 | OR | 6 | 1 | EPDM | 70 | PEROX | PACK | 500 | 10,92 |
| 189462 | OR | 6 | 1,5 | EPDM | 70 | PEROX | - | 15000 | 8,01 |
| 190175 | OR | 6 | 1,5 | EPDM | 70 | PEROX | PACK | 750 | 11,95 |
| 189501 | OR | 6 | 2 | EPDM | 70 | PEROX | - | 10000 | 9,58 |
| 190094 | OR | 6 | 2 | EPDM | 70 | PEROX | PACK | 500 | 10,80 |
| 189520 | OR | 6,02 | 2,62 | EPDM | 70 | PEROX | - | 7500 | 10,10 |

| CODICE | TIPO | d1 mm | d2 mm | MAT. | SH | MAT | CONFEZIONAMENTO | | LISTINO 5-2016 X 100 € |
|---|---|---|---|---|---|---|---|---|---|
| 190196 | OR | 6,02 | 2,62 | EPDM | 70 | PEROX | PACK | 500 | 11,32 |
| 189471 | OR | 6,07 | 1,78 | EPDM | 70 | PEROX | - | 10000 | 8,71 |
| 190090 | OR | 6,07 | 1,78 | EPDM | 70 | PEROX | PACK | 750 | 9,74 |
| 191903 | OR | 6,4 | 1,9 | EPDM | 70 | PEROX | - | 10000 | 8,36 |
| 191972 | OR | 6,4 | 1,9 | EPDM | 70 | PEROX | PACK | 750 | 9,40 |
| 189456 | OR | 7 | 1 | EPDM | 70 | PEROX | - | 20000 | 9,58 |
| 190185 | OR | 7 | 1 | EPDM | 70 | PEROX | PACK | 500 | 10,93 |
| 189463 | OR | 7 | 1,5 | EPDM | 70 | PEROX | - | 15000 | 8,19 |
| 190086 | OR | 7 | 1,5 | EPDM | 70 | PEROX | PACK | 750 | 9,22 |
| 191904 | OR | 7,2 | 1,9 | EPDM | 70 | PEROX | - | 10000 | 9,06 |
| 191973 | OR | 7,2 | 1,9 | EPDM | 70 | PEROX | PACK | 750 | 10,10 |
| 193605 | OR | 7,3 | 2,4 | EPDM | 70 | PEROX | - | 7500 | 10,97 |
| 193606 | OR | 7,3 | 2,4 | EPDM | 70 | PEROX | PACK | 500 | 12,02 |
| 191882 | OR | 7,59 | 2,62 | EPDM | 70 | PEROX | - | 7500 | 11,50 |
| 193610 | OR | 7,59 | 2,62 | EPDM | 70 | PEROX | PACK | 500 | 12,72 |
| 189472 | OR | 7,65 | 1,78 | EPDM | 70 | PEROX | - | 10000 | 9,23 |
| 190092 | OR | 7,65 | 1,78 | EPDM | 70 | PEROX | PACK | 500 | 10,45 |
| 189457 | OR | 8 | 1 | EPDM | 70 | PEROX | - | 20000 | 9,93 |
| 190186 | OR | 8 | 1 | EPDM | 70 | PEROX | PACK | 500 | 11,27 |
| 191905 | OR | 8 | 1,9 | EPDM | 70 | PEROX | - | 10000 | 9,23 |
| 191974 | OR | 8 | 1,9 | EPDM | 70 | PEROX | PACK | 500 | 10,45 |
| 189502 | OR | 8 | 2 | EPDM | 70 | PEROX | - | 10000 | 9,41 |
| 190194 | OR | 8 | 2 | EPDM | 70 | PEROX | PACK | 500 | 10,63 |
| 189499 | OR | 8,9 | 1,9 | EPDM | 70 | PEROX | - | 10000 | 9,41 |
| 190193 | OR | 8,9 | 1,9 | EPDM | 70 | PEROX | PACK | 500 | 10,64 |
| 191925 | OR | 8,9 | 2,7 | EPDM | 70 | PEROX | - | 5000 | 14,81 |
| 191992 | OR | 8,9 | 2,7 | EPDM | 70 | PEROX | PACK | 350 | 16,42 |
| 189458 | OR | 9 | 1 | EPDM | 70 | PEROX | - | 20000 | 10,10 |
| 190187 | OR | 9 | 1 | EPDM | 70 | PEROX | PACK | 500 | 11,44 |
| 193075 | OR | 9,19 | 2,62 | EPDM | 70 | PEROX | - | 7500 | 12,72 |
| 193611 | OR | 9,19 | 2,62 | EPDM | 70 | PEROX | PACK | 500 | 13,93 |
| 189473 | OR | 9,25 | 1,78 | EPDM | 70 | PEROX | - | 10000 | 9,58 |
| 190192 | OR | 9,25 | 1,78 | EPDM | 70 | PEROX | PACK | 500 | 10,80 |
| 191793 | OR | 9,3 | 2,4 | EPDM | 70 | PEROX | - | 7500 | 11,68 |
| 192051 | OR | 9,3 | 2,4 | EPDM | 70 | PEROX | PACK | 350 | 13,32 |
| 189459 | OR | 10 | 1 | EPDM | 70 | PEROX | - | 20000 | 10,45 |
| 190188 | OR | 10 | 1 | EPDM | 70 | PEROX | PACK | 500 | 11,79 |
| 189464 | OR | 10 | 1,5 | EPDM | 70 | PEROX | - | 15000 | 9,75 |
| 190176 | OR | 10 | 1,5 | EPDM | 70 | PEROX | PACK | 750 | 10,79 |
| 190440 | OR | 10 | 1,8 | EPDM | 70 | PEROX | - | 10000 | 9,93 |
| 190446 | OR | 10 | 1,8 | EPDM | 70 | PEROX | PACK | 500 | 11,15 |
| 189503 | OR | 10 | 2 | EPDM | 70 | PEROX | - | 10000 | 10,45 |
| 190195 | OR | 10 | 2 | EPDM | 70 | PEROX | PACK | 500 | 11,67 |
| 189516 | OR | 10 | 2,5 | EPDM | 70 | PEROX | - | 7500 | 15,15 |
| 190102 | OR | 10 | 2,5 | EPDM | 70 | PEROX | PACK | 350 | 16,77 |
| 191926 | OR | 10,5 | 2,7 | EPDM | 70 | PEROX | - | 5000 | 16,90 |
| 191993 | OR | 10,5 | 2,7 | EPDM | 70 | PEROX | PACK | 350 | 18,51 |
| 193120 | OR | 10,69 | 3,53 | EPDM | 70 | PEROX | - | 5000 | 21,77 |
| 193612 | OR | 10,69 | 3,53 | EPDM | 70 | PEROX | PACK | 250 | 24,04 |

| CODICE | TIPO | d1 mm | d2 mm | MAT. | SH | MAT | CONFEZIONAMENTO | | LISTINO 5-2016 X 100 € |
|---|---|---|---|---|---|---|---|---|---|
| 189521 | OR | 10,77 | 2,62 | EPDM | 70 | PEROX | - | 5000 | 15,68 |
| 190103 | OR | 10,77 | 2,62 | EPDM | 70 | PEROX | PACK | 350 | 17,29 |
| 189474 | OR | 10,82 | 1,78 | EPDM | 70 | PEROX | - | 10000 | 10,45 |
| 190093 | OR | 10,82 | 1,78 | EPDM | 70 | PEROX | PACK | 500 | 11,67 |
| 189465 | OR | 11 | 1,5 | EPDM | 70 | PEROX | - | 10000 | 9,93 |
| 190191 | OR | 11 | 1,5 | EPDM | 70 | PEROX | PACK | 500 | 11,15 |
| 189504 | OR | 11 | 2 | EPDM | 70 | PEROX | - | 10000 | 13,93 |
| 190100 | OR | 11 | 2 | EPDM | 70 | PEROX | PACK | 350 | 15,55 |
| 189475 | OR | 11,11 | 1,78 | EPDM | 70 | PEROX | - | 10000 | 13,93 |
| 190197 | OR | 11,11 | 1,78 | EPDM | 70 | PEROX | PACK | 350 | 15,55 |
| 191792 | OR | 11,3 | 2,4 | EPDM | 70 | PEROX | - | 5000 | 15,33 |
| 192052 | OR | 11,3 | 2,4 | EPDM | 70 | PEROX | PACK | 350 | 16,94 |
| 189460 | OR | 12 | 1 | EPDM | 70 | PEROX | - | 15000 | 11,32 |
| 190189 | OR | 12 | 1 | EPDM | 70 | PEROX | PACK | 500 | 12,54 |
| 189505 | OR | 12 | 2 | EPDM | 70 | PEROX | - | 10000 | 14,28 |
| 190199 | OR | 12 | 2 | EPDM | 70 | PEROX | PACK | 350 | 15,90 |
| 189551 | OR | 12 | 3 | EPDM | 70 | PEROX | - | 5000 | 18,81 |
| 190210 | OR | 12 | 3 | EPDM | 70 | PEROX | PACK | 250 | 21,12 |
| 191927 | OR | 12,1 | 2,7 | EPDM | 70 | PEROX | - | 5000 | 18,29 |
| 191994 | OR | 12,1 | 2,7 | EPDM | 70 | PEROX | PACK | 350 | 19,90 |
| 189572 | OR | 12,29 | 3,53 | EPDM | 70 | PEROX | - | 5000 | 23,69 |
| 190111 | OR | 12,29 | 3,53 | EPDM | 70 | PEROX | PACK | 250 | 25,85 |
| 189522 | OR | 12,37 | 2,62 | EPDM | 70 | PEROX | - | 5000 | 18,12 |
| 190104 | OR | 12,37 | 2,62 | EPDM | 70 | PEROX | PACK | 350 | 19,73 |
| 189481 | OR | 12,42 | 1,78 | EPDM | 70 | PEROX | - | 10000 | 14,81 |
| 190095 | OR | 12,42 | 1,78 | EPDM | 70 | PEROX | PACK | 350 | 16,42 |
| 189466 | OR | 13 | 1,5 | EPDM | 70 | PEROX | - | 10000 | 11,15 |
| 190177 | OR | 13 | 1,5 | EPDM | 70 | PEROX | PACK | 750 | 12,18 |
| 189506 | OR | 13 | 2 | EPDM | 70 | PEROX | - | 10000 | 16,20 |
| 190200 | OR | 13 | 2 | EPDM | 70 | PEROX | PACK | 350 | 17,82 |
| 191917 | OR | 13,1 | 2,62 | EPDM | 70 | PEROX | - | 5000 | 17,42 |
| 191984 | OR | 13,1 | 2,62 | EPDM | 70 | PEROX | PACK | 500 | 18,88 |
| 191928 | OR | 13,6 | 2,7 | EPDM | 70 | PEROX | - | 5000 | 18,81 |
| 191995 | OR | 13,6 | 2,7 | EPDM | 70 | PEROX | PACK | 350 | 20,53 |
| 189523 | OR | 13,94 | 2,62 | EPDM | 70 | PEROX | - | 5000 | 19,16 |
| 190209 | OR | 13,94 | 2,62 | EPDM | 70 | PEROX | PACK | 250 | 21,32 |
| 189482 | OR | 14 | 1,78 | EPDM | 70 | PEROX | - | 10000 | 15,33 |
| 190096 | OR | 14 | 1,78 | EPDM | 70 | PEROX | PACK | 350 | 16,94 |
| 189507 | OR | 14 | 2 | EPDM | 70 | PEROX | - | 10000 | 16,02 |
| 190201 | OR | 14 | 2 | EPDM | 70 | PEROX | PACK | 350 | 17,64 |
| 193555 | OR | 14 | 2,5 | EPDM | 70 | PEROX | - | 5000 | 17,07 |
| 193556 | OR | 14 | 2,5 | EPDM | 70 | PEROX | PACK | 350 | 18,81 |
| 189552 | OR | 14 | 3 | EPDM | 70 | PEROX | - | 5000 | 20,90 |
| 190211 | OR | 14 | 3 | EPDM | 70 | PEROX | PACK | 250 | 26,83 |
| 193557 | OR | 15 | 2 | EPDM | 70 | PEROX | - | 10000 | 16,37 |
| 193558 | OR | 15 | 2 | EPDM | 70 | PEROX | PACK | 350 | 18,12 |
| 189517 | OR | 15 | 2,5 | EPDM | 70 | PEROX | - | 5000 | 18,46 |
| 190205 | OR | 15 | 2,5 | EPDM | 70 | PEROX | PACK | 350 | 20,08 |
| 189553 | OR | 15 | 3 | EPDM | 70 | PEROX | - | 5000 | 21,77 |

| CODICE | TIPO | d1 mm | d2 mm | MAT. | SH | MAT | CONFEZIONAMENTO | | LISTINO 5-2016 X 100 € |
|---|---|---|---|---|---|---|---|---|---|
| 190212 | OR | 15 | 3 | EPDM | 70 | PEROX | PACK | 250 | 27,69 |
| 191929 | OR | 15,1 | 2,7 | EPDM | 70 | PEROX | - | 2500 | 21,60 |
| 191996 | OR | 15,1 | 2,7 | EPDM | 70 | PEROX | PACK | 250 | 23,76 |
| 189515 | OR | 15,3 | 2,4 | EPDM | 70 | PEROX | - | 5000 | 18,64 |
| 190204 | OR | 15,3 | 2,4 | EPDM | 70 | PEROX | PACK | 350 | 20,25 |
| 193121 | OR | 15,47 | 3,53 | EPDM | 70 | PEROX | - | 2500 | 29,61 |
| 193615 | OR | 15,47 | 3,53 | EPDM | 70 | PEROX | PACK | 150 | 32,57 |
| 189524 | OR | 15,54 | 2,62 | EPDM | 70 | PEROX | - | 5000 | 19,33 |
| 190109 | OR | 15,54 | 2,62 | EPDM | 70 | PEROX | PACK | 250 | 21,49 |
| 189483 | OR | 15,6 | 1,78 | EPDM | 70 | PEROX | - | 5000 | 16,20 |
| 190098 | OR | 15,6 | 1,78 | EPDM | 70 | PEROX | PACK | 350 | 17,81 |
| 191906 | OR | 16 | 1,9 | EPDM | 70 | PEROX | - | 5000 | 18,81 |
| 191975 | OR | 16 | 1,9 | EPDM | 70 | PEROX | PACK | 250 | 20,97 |
| 189508 | OR | 16 | 2 | EPDM | 70 | PEROX | - | 5000 | 17,42 |
| 190101 | OR | 16 | 2 | EPDM | 70 | PEROX | PACK | 350 | 19,03 |
| 189518 | OR | 16 | 2,5 | EPDM | 70 | PEROX | - | 5000 | 19,86 |
| 190108 | OR | 16 | 2,5 | EPDM | 70 | PEROX | PACK | 250 | 22,02 |
| 191930 | OR | 16,9 | 2,7 | EPDM | 70 | PEROX | - | 2500 | 21,60 |
| 191997 | OR | 16,9 | 2,7 | EPDM | 70 | PEROX | PACK | 250 | 23,76 |
| 189509 | OR | 17 | 2 | EPDM | 70 | PEROX | - | 5000 | 17,77 |
| 190202 | OR | 17 | 2 | EPDM | 70 | PEROX | PACK | 350 | 19,38 |
| 193559 | OR | 17 | 2,5 | EPDM | 70 | PEROX | - | 5000 | 18,29 |
| 193560 | OR | 17 | 2,5 | EPDM | 70 | PEROX | PACK | 350 | 20,21 |
| 193122 | OR | 17,04 | 3,53 | EPDM | 70 | PEROX | - | 2500 | 32,22 |
| 193616 | OR | 17,04 | 3,53 | EPDM | 70 | PEROX | PACK | 150 | 35,53 |
| 191918 | OR | 17,12 | 2,62 | EPDM | 70 | PEROX | - | 5000 | 20,90 |
| 191985 | OR | 17,12 | 2,62 | EPDM | 70 | PEROX | PACK | 350 | 22,62 |
| 189484 | OR | 17,16 | 1,78 | EPDM | 70 | PEROX | - | 5000 | 16,90 |
| 190099 | OR | 17,17 | 1,78 | EPDM | 70 | PEROX | PACK | 350 | 18,51 |
| 191919 | OR | 17,86 | 2,62 | EPDM | 70 | PEROX | - | 5000 | 21,77 |
| 191986 | OR | 17,86 | 2,62 | EPDM | 70 | PEROX | PACK | 250 | 24,04 |
| 193561 | OR | 18 | 1,5 | EPDM | 70 | PEROX | - | 10000 | 15,68 |
| 193562 | OR | 18 | 1,5 | EPDM | 70 | PEROX | PACK | 350 | 17,24 |
| 189510 | OR | 18 | 2 | EPDM | 70 | PEROX | - | 5000 | 17,94 |
| 190203 | OR | 18 | 2 | EPDM | 70 | PEROX | PACK | 350 | 19,55 |
| 191913 | OR | 18 | 2,5 | EPDM | 70 | PEROX | - | 5000 | 20,21 |
| 191980 | OR | 18 | 2,5 | EPDM | 70 | PEROX | PACK | 250 | 22,37 |
| 189554 | OR | 18 | 3 | EPDM | 70 | PEROX | - | 2500 | 23,51 |
| 190110 | OR | 18 | 3 | EPDM | 70 | PEROX | PACK | 250 | 25,77 |
| 191948 | OR | 18 | 4 | EPDM | 70 | PEROX | - | 2500 | 40,06 |
| 192016 | OR | 18 | 4 | EPDM | 70 | PEROX | PACK | 100 | 43,29 |
| 191935 | OR | 18,3 | 3,6 | EPDM | 70 | PEROX | - | 2500 | 34,84 |
| 192002 | OR | 18,3 | 3,6 | EPDM | 70 | PEROX | PACK | 150 | 38,26 |
| 191931 | OR | 18,4 | 2,7 | EPDM | 70 | PEROX | - | 2500 | 22,64 |
| 191998 | OR | 18,4 | 2,7 | EPDM | 70 | PEROX | PACK | 250 | 24,80 |
| 189573 | OR | 18,64 | 3,53 | EPDM | 70 | PEROX | - | 2500 | 33,27 |
| 190126 | OR | 18,64 | 3,53 | EPDM | 70 | PEROX | PACK | 150 | 36,45 |
| 193076 | OR | 18,72 | 2,62 | EPDM | 70 | PEROX | - | 5000 | 21,95 |
| 193613 | OR | 18,72 | 2,62 | EPDM | 70 | PEROX | PACK | 250 | 24,21 |

| CODICE | TIPO | d1 mm | d2 mm | MAT. | SH | MAT | CONFEZIONAMENTO | | LISTINO 5-2016 X 100 € |
|---|---|---|---|---|---|---|---|---|---|
| 189485 | OR | 18,77 | 1,78 | EPDM | 70 | PEROX | - | 5000 | 18,29 |
| 190198 | OR | 18,77 | 1,78 | EPDM | 70 | PEROX | PACK | 350 | 19,90 |
| 193563 | OR | 19 | 2 | EPDM | 70 | PEROX | - | 5000 | 18,64 |
| 193564 | OR | 19 | 2 | EPDM | 70 | PEROX | PACK | 350 | 20,55 |
| 191936 | OR | 19,8 | 3,6 | EPDM | 70 | PEROX | - | 2500 | 34,84 |
| 192003 | OR | 19,8 | 3,6 | EPDM | 70 | PEROX | PACK | 150 | 38,02 |
| 189555 | OR | 20 | 3 | EPDM | 70 | PEROX | - | 2500 | 31,35 |
| 190217 | OR | 20 | 3 | EPDM | 70 | PEROX | PACK | 150 | 34,54 |
| 189574 | OR | 20,22 | 3,53 | EPDM | 70 | PEROX | - | 2500 | 36,58 |
| 190127 | OR | 20,22 | 3,53 | EPDM | 70 | PEROX | PACK | 150 | 39,76 |
| 189525 | OR | 20,29 | 2,62 | EPDM | 70 | PEROX | - | 5000 | 28,91 |
| 190117 | OR | 20,29 | 2,62 | EPDM | 70 | PEROX | PACK | 150 | 32,10 |
| 189486 | OR | 20,35 | 1,78 | EPDM | 70 | PEROX | - | 5000 | 18,99 |
| 190105 | OR | 20,35 | 1,78 | EPDM | 70 | PEROX | PACK | 250 | 21,15 |
| 191909 | OR | 21 | 2 | EPDM | 70 | PEROX | - | 5000 | 27,00 |
| 191976 | OR | 21 | 2 | EPDM | 70 | PEROX | PACK | 250 | 29,71 |
| 191937 | OR | 21,3 | 3,6 | EPDM | 70 | PEROX | - | 2500 | 38,32 |
| 192004 | OR | 21,3 | 3,6 | EPDM | 70 | PEROX | PACK | 150 | 41,50 |
| 193123 | OR | 21,82 | 3,53 | EPDM | 70 | PEROX | - | 2500 | 40,41 |
| 193620 | OR | 21,82 | 3,53 | EPDM | 70 | PEROX | PACK | 150 | 44,42 |
| 189526 | OR | 21,89 | 2,62 | EPDM | 70 | PEROX | - | 5000 | 29,96 |
| 190118 | OR | 21,89 | 2,62 | EPDM | 70 | PEROX | PACK | 150 | 33,03 |
| 189487 | OR | 21,95 | 1,78 | EPDM | 70 | PEROX | - | 5000 | 19,33 |
| 190106 | OR | 21,95 | 1,78 | EPDM | 70 | PEROX | PACK | 250 | 21,49 |
| 189511 | OR | 22 | 2 | EPDM | 70 | PEROX | - | 5000 | 20,90 |
| 190107 | OR | 22 | 2 | EPDM | 70 | PEROX | PACK | 250 | 23,06 |
| 189556 | OR | 22 | 3 | EPDM | 70 | PEROX | - | 2500 | 31,88 |
| 190218 | OR | 22 | 3 | EPDM | 70 | PEROX | PACK | 150 | 35,06 |
| 191914 | OR | 23 | 2,5 | EPDM | 70 | PEROX | - | 5000 | 30,66 |
| 191981 | OR | 23 | 2,5 | EPDM | 70 | PEROX | PACK | 150 | 33,84 |
| 191938 | OR | 23 | 3,6 | EPDM | 70 | PEROX | - | 2500 | 40,93 |
| 192005 | OR | 23 | 3,6 | EPDM | 70 | PEROX | PACK | 150 | 44,12 |
| 193124 | OR | 23,39 | 3,53 | EPDM | 70 | PEROX | - | 2500 | 41,28 |
| 193621 | OR | 23,39 | 3,53 | EPDM | 70 | PEROX | PACK | 150 | 45,46 |
| 189527 | OR | 23,47 | 2,62 | EPDM | 70 | PEROX | - | 5000 | 31,35 |
| 190119 | OR | 23,47 | 2,62 | EPDM | 70 | PEROX | PACK | 150 | 34,54 |
| 189488 | OR | 23,52 | 1,78 | EPDM | 70 | PEROX | - | 5000 | 20,90 |
| 190207 | OR | 23,52 | 1,78 | EPDM | 70 | PEROX | PACK | 250 | 23,06 |
| 189467 | OR | 24 | 1,5 | EPDM | 70 | PEROX | - | 10000 | 20,90 |
| 190206 | OR | 24 | 1,5 | EPDM | 70 | PEROX | PACK | 250 | 22,94 |
| 189557 | OR | 24 | 3 | EPDM | 70 | PEROX | - | 2500 | 34,84 |
| 190125 | OR | 24 | 3 | EPDM | 70 | PEROX | PACK | 150 | 38,02 |
| 191939 | OR | 24,6 | 3,6 | EPDM | 70 | PEROX | - | 2500 | 41,46 |
| 192006 | OR | 24,6 | 3,6 | EPDM | 70 | PEROX | PACK | 150 | 44,64 |
| 189575 | OR | 24,99 | 3,53 | EPDM | 70 | PEROX | - | 2500 | 40,93 |
| 190128 | OR | 24,99 | 3,53 | EPDM | 70 | PEROX | PACK | 150 | 44,11 |
| 189512 | OR | 25 | 2 | EPDM | 70 | PEROX | - | 5000 | 22,64 |
| 190208 | OR | 25 | 2 | EPDM | 70 | PEROX | PACK | 250 | 24,81 |
| 191949 | OR | 25 | 4 | EPDM | 70 | PEROX | - | 2500 | 50,17 |

| CODICE | TIPO | d1 mm | d2 mm | MAT. | SH | MAT | CONFEZIONAMENTO | | LISTINO 5-2016 X 100 € |
|---|---|---|---|---|---|---|---|---|---|
| 192017 | OR | 25 | 4 | EPDM | 70 | PEROX | PACK | 100 | 54,36 |
| 189528 | OR | 25,07 | 2,62 | EPDM | 70 | PEROX | - | 5000 | 32,40 |
| 190120 | OR | 25,07 | 2,62 | EPDM | 70 | PEROX | PACK | 150 | 35,58 |
| 193069 | OR | 25,12 | 1,78 | EPDM | 70 | PEROX | - | 5000 | 24,39 |
| 193614 | OR | 25,12 | 1,78 | EPDM | 70 | PEROX | PACK | 250 | 26,82 |
| 190441 | OR | 25,8 | 1,8 | EPDM | 70 | PEROX | - | 5000 | 28,74 |
| 190447 | OR | 25,8 | 1,8 | EPDM | 70 | PEROX | PACK | 150 | 31,92 |
| 191915 | OR | 26 | 2,5 | EPDM | 70 | PEROX | - | 5000 | 33,44 |
| 191982 | OR | 26 | 2,5 | EPDM | 70 | PEROX | PACK | 150 | 36,63 |
| 189558 | OR | 26,2 | 3 | EPDM | 70 | PEROX | - | 2500 | 36,58 |
| 190219 | OR | 26,2 | 3 | EPDM | 70 | PEROX | PACK | 150 | 39,76 |
| 191940 | OR | 26,2 | 3,6 | EPDM | 70 | PEROX | - | 2500 | 45,29 |
| 192007 | OR | 26,2 | 3,6 | EPDM | 70 | PEROX | PACK | 150 | 48,47 |
| 189529 | OR | 26,64 | 2,62 | EPDM | 70 | PEROX | - | 5000 | 33,44 |
| 190121 | OR | 26,64 | 2,62 | EPDM | 70 | PEROX | PACK | 150 | 36,63 |
| 189489 | OR | 26,7 | 1,78 | EPDM | 70 | PEROX | - | 5000 | 28,74 |
| 190112 | OR | 26,7 | 1,78 | EPDM | 70 | PEROX | PACK | 150 | 31,92 |
| 191941 | OR | 27,8 | 3,6 | EPDM | 70 | PEROX | - | 2500 | 46,68 |
| 192009 | OR | 27,8 | 3,6 | EPDM | 70 | PEROX | PACK | 100 | 50,87 |
| 189576 | OR | 28,17 | 3,53 | EPDM | 70 | PEROX | - | 2500 | 46,16 |
| 190131 | OR | 28,17 | 3,53 | EPDM | 70 | PEROX | PACK | 100 | 50,76 |
| 193077 | OR | 28,24 | 2,62 | EPDM | 70 | PEROX | - | 5000 | 36,06 |
| 193617 | OR | 28,24 | 2,62 | EPDM | 70 | PEROX | PACK | 150 | 39,71 |
| 189490 | OR | 28,3 | 1,78 | EPDM | 70 | PEROX | - | 5000 | 31,35 |
| 190213 | OR | 28,3 | 1,78 | EPDM | 70 | PEROX | PACK | 150 | 34,54 |
| 189559 | OR | 29 | 3 | EPDM | 70 | PEROX | - | 2500 | 39,19 |
| 190221 | OR | 29 | 3 | EPDM | 70 | PEROX | PACK | 150 | 42,39 |
| 191942 | OR | 29,3 | 3,6 | EPDM | 70 | PEROX | - | 2500 | 48,77 |
| 192010 | OR | 29,3 | 3,6 | EPDM | 70 | PEROX | PACK | 100 | 52,96 |
| 193132 | OR | 29,51 | 5,33 | EPDM | 70 | PEROX | - | 1500 | 89,18 |
| 193640 | OR | 29,51 | 5,33 | EPDM | 70 | PEROX | PACK | 50 | 98,07 |
| 193125 | OR | 29,74 | 3,53 | EPDM | 70 | PEROX | - | 2500 | 50,51 |
| 193627 | OR | 29,74 | 3,53 | EPDM | 70 | PEROX | PACK | 100 | 55,56 |
| 189530 | OR | 29,82 | 2,62 | EPDM | 70 | PEROX | - | 5000 | 36,41 |
| 190216 | OR | 29,82 | 2,62 | EPDM | 70 | PEROX | PACK | 150 | 39,59 |
| 189491 | OR | 29,87 | 1,78 | EPDM | 70 | PEROX | - | 5000 | 32,40 |
| 190113 | OR | 29,87 | 1,78 | EPDM | 70 | PEROX | PACK | 150 | 35,58 |
| 191916 | OR | 30 | 2,5 | EPDM | 70 | PEROX | - | 5000 | 39,54 |
| 191983 | OR | 30 | 2,5 | EPDM | 70 | PEROX | PACK | 150 | 42,99 |
| 189560 | OR | 30 | 3 | EPDM | 70 | PEROX | - | 2500 | 40,06 |
| 190222 | OR | 30 | 3 | EPDM | 70 | PEROX | PACK | 150 | 43,24 |
| 191943 | OR | 30,8 | 3,6 | EPDM | 70 | PEROX | - | 2000 | 52,26 |
| 192011 | OR | 30,8 | 3,6 | EPDM | 70 | PEROX | PACK | 100 | 56,45 |
| 189577 | OR | 31,34 | 3,53 | EPDM | 70 | PEROX | - | 2500 | 50,51 |
| 190132 | OR | 31,34 | 3,53 | EPDM | 70 | PEROX | PACK | 100 | 55,12 |
| 189531 | OR | 31,42 | 2,62 | EPDM | 70 | PEROX | - | 5000 | 40,06 |
| 190123 | OR | 31,42 | 2,62 | EPDM | 70 | PEROX | PACK | 150 | 43,24 |
| 189492 | OR | 31,47 | 1,78 | EPDM | 70 | PEROX | - | 5000 | 35,19 |
| 190114 | OR | 31,47 | 1,78 | EPDM | 70 | PEROX | PACK | 150 | 38,37 |

| CODICE | TIPO | d1 mm | d2 mm | MAT. | SH | MAT | CONFEZIONAMENTO | | LISTINO 5-2016 X 100 € |
|---|---|---|---|---|---|---|---|---|---|
| 192962 | OR | 32 | 1 | EPDM | 70 | PEROX | - | 7500 | 34,84 |
| 192969 | OR | 32 | 1 | EPDM | 70 | PEROX | PACK | 150 | 38,02 |
| 191897 | OR | 32 | 2 | EPDM | 70 | PEROX | - | 5000 | 35,88 |
| 191898 | OR | 32 | 2 | EPDM | 70 | PEROX | PACK | 150 | 39,71 |
| 189561 | OR | 32 | 3 | EPDM | 70 | PEROX | - | 2500 | 42,15 |
| 190224 | OR | 32 | 3 | EPDM | 70 | PEROX | PACK | 150 | 45,34 |
| 189603 | OR | 32 | 5 | EPDM | 70 | PEROX | - | 2000 | 73,16 |
| 190236 | OR | 32 | 5 | EPDM | 70 | PEROX | PACK | 100 | 77,95 |
| 191944 | OR | 32,5 | 3,6 | EPDM | 70 | PEROX | - | 2000 | 57,48 |
| 192012 | OR | 32,5 | 3,6 | EPDM | 70 | PEROX | PACK | 100 | 61,67 |
| 189578 | OR | 32,92 | 3,53 | EPDM | 70 | PEROX | - | 2500 | 52,26 |
| 190133 | OR | 32,92 | 3,53 | EPDM | 70 | PEROX | PACK | 100 | 56,86 |
| 192966 | OR | 32,99 | 2,62 | EPDM | 70 | PEROX | - | 5000 | 40,06 |
| 193618 | OR | 32,99 | 2,62 | EPDM | 70 | PEROX | PACK | 150 | 44,07 |
| 189493 | OR | 33,05 | 1,78 | EPDM | 70 | PEROX | - | 5000 | 44,07 |
| 190115 | OR | 33,05 | 1,78 | EPDM | 70 | PEROX | PACK | 150 | 47,25 |
| 189562 | OR | 34 | 3 | EPDM | 70 | PEROX | - | 2500 | 45,29 |
| 190225 | OR | 34 | 3 | EPDM | 70 | PEROX | PACK | 150 | 48,47 |
| 191945 | OR | 34,1 | 3,6 | EPDM | 70 | PEROX | - | 2000 | 57,48 |
| 192013 | OR | 34,1 | 3,6 | EPDM | 70 | PEROX | PACK | 100 | 61,67 |
| 193133 | OR | 34,29 | 5,33 | EPDM | 70 | PEROX | - | 1000 | 109,74 |
| 193641 | OR | 34,29 | 5,33 | EPDM | 70 | PEROX | PACK | 50 | 120,71 |
| 189579 | OR | 34,52 | 3,53 | EPDM | 70 | PEROX | - | 2500 | 53,30 |
| 190233 | OR | 34,52 | 3,53 | EPDM | 70 | PEROX | PACK | 100 | 57,73 |
| 189532 | OR | 34,59 | 2,62 | EPDM | 70 | PEROX | - | 5000 | 41,80 |
| 190124 | OR | 34,59 | 2,62 | EPDM | 70 | PEROX | PACK | 150 | 44,99 |
| 189494 | OR | 34,65 | 1,78 | EPDM | 70 | PEROX | - | 5000 | 38,32 |
| 190214 | OR | 34,65 | 1,78 | EPDM | 70 | PEROX | PACK | 150 | 41,55 |
| 191910 | OR | 35 | 2 | EPDM | 70 | PEROX | - | 5000 | 40,93 |
| 191977 | OR | 35 | 2 | EPDM | 70 | PEROX | PACK | 150 | 44,36 |
| 191946 | OR | 35,6 | 3,6 | EPDM | 70 | PEROX | - | 2000 | 57,48 |
| 192014 | OR | 35,6 | 3,6 | EPDM | 70 | PEROX | PACK | 100 | 61,67 |
| 189513 | OR | 36 | 2 | EPDM | 70 | PEROX | - | 5000 | 40,06 |
| 190215 | OR | 36 | 2 | EPDM | 70 | PEROX | PACK | 150 | 43,24 |
| 189563 | OR | 36 | 3 | EPDM | 70 | PEROX | - | 2500 | 45,29 |
| 190226 | OR | 36 | 3 | EPDM | 70 | PEROX | PACK | 150 | 48,47 |
| 189580 | OR | 36,09 | 3,53 | EPDM | 70 | PEROX | - | 2500 | 57,48 |
| 190134 | OR | 36,09 | 3,53 | EPDM | 70 | PEROX | PACK | 100 | 62,09 |
| 191947 | OR | 37,3 | 3,6 | EPDM | 70 | PEROX | - | 2000 | 58,35 |
| 192015 | OR | 37,3 | 3,6 | EPDM | 70 | PEROX | PACK | 100 | 62,54 |
| 187660 | OR | 37,47 | 5,33 | EPDM | 70 | PEROX | - | 1000 | 139,35 |
| 192020 | OR | 37,47 | 5,33 | EPDM | 70 | PEROX | PACK | 50 | 150,30 |
| 189581 | OR | 37,69 | 3,53 | EPDM | 70 | PEROX | - | 2500 | 60,09 |
| 190234 | OR | 37,69 | 3,53 | EPDM | 70 | PEROX | PACK | 100 | 64,52 |
| 189533 | OR | 37,77 | 2,62 | EPDM | 70 | PEROX | - | 5000 | 50,51 |
| 190129 | OR | 37,77 | 2,62 | EPDM | 70 | PEROX | PACK | 100 | 55,12 |
| 189495 | OR | 37,82 | 1,78 | EPDM | 70 | PEROX | - | 5000 | 38,67 |
| 190116 | OR | 37,82 | 1,78 | EPDM | 70 | PEROX | PACK | 150 | 41,85 |
| 189564 | OR | 38 | 3 | EPDM | 70 | PEROX | - | 2500 | 53,13 |

| CODICE | TIPO | d1 mm | d2 mm | MAT. | SH | MAT | CONFEZIONAMENTO | | LISTINO 5-2016 X 100 € |
|---|---|---|---|---|---|---|---|---|---|
| 190229 | OR | 38 | 3 | EPDM | 70 | PEROX | PACK | 100 | 57,55 |
| 189565 | OR | 39 | 3 | EPDM | 70 | PEROX | - | 2500 | 54,00 |
| 190230 | OR | 39 | 3 | EPDM | 70 | PEROX | PACK | 100 | 58,44 |
| 193078 | OR | 39,34 | 2,62 | EPDM | 70 | PEROX | - | 5000 | 52,08 |
| 193628 | OR | 39,34 | 2,62 | EPDM | 70 | PEROX | PACK | 100 | 57,31 |
| 191933 | OR | 39,69 | 3,53 | EPDM | 70 | PEROX | - | 2500 | 66,19 |
| 192000 | OR | 39,69 | 3,53 | EPDM | 70 | PEROX | PACK | 100 | 71,59 |
| 189519 | OR | 40 | 2,5 | EPDM | 70 | PEROX | - | 5000 | 54,87 |
| 190228 | OR | 40 | 2,5 | EPDM | 70 | PEROX | PACK | 100 | 59,31 |
| 189566 | OR | 40 | 3 | EPDM | 70 | PEROX | - | 2500 | 59,22 |
| 190231 | OR | 40 | 3 | EPDM | 70 | PEROX | PACK | 100 | 63,65 |
| 189599 | OR | 40 | 4 | EPDM | 70 | PEROX | - | 2000 | 73,16 |
| 190235 | OR | 40 | 4 | EPDM | 70 | PEROX | PACK | 100 | 77,95 |
| 189606 | OR | 40,64 | 5,33 | EPDM | 70 | PEROX | - | 1000 | 113,22 |
| 190153 | OR | 40,64 | 5,33 | EPDM | 70 | PEROX | PACK | 50 | 120,88 |
| 193126 | OR | 40,87 | 3,53 | EPDM | 70 | PEROX | - | 2000 | 73,68 |
| 193635 | OR | 40,87 | 3,53 | EPDM | 70 | PEROX | PACK | 100 | 81,00 |
| 193113 | OR | 40,94 | 2,62 | EPDM | 70 | PEROX | - | 2500 | 47,03 |
| 193629 | OR | 40,94 | 2,62 | EPDM | 70 | PEROX | PACK | 100 | 51,73 |
| 191950 | OR | 42 | 4 | EPDM | 70 | PEROX | - | 1500 | 78,38 |
| 192018 | OR | 42 | 4 | EPDM | 70 | PEROX | PACK | 50 | 86,90 |
| 189534 | OR | 42,52 | 2,62 | EPDM | 70 | PEROX | - | 2500 | 54,00 |
| 190130 | OR | 42,52 | 2,62 | EPDM | 70 | PEROX | PACK | 100 | 58,60 |
| 191952 | OR | 43,82 | 5,33 | EPDM | 70 | PEROX | - | 1000 | 153,28 |
| 192021 | OR | 43,82 | 5,33 | EPDM | 70 | PEROX | PACK | 50 | 164,24 |
| 191920 | OR | 44,12 | 2,62 | EPDM | 70 | PEROX | - | 2500 | 57,48 |
| 191987 | OR | 44,12 | 2,62 | EPDM | 70 | PEROX | PACK | 100 | 62,84 |
| 193070 | OR | 44,17 | 1,78 | EPDM | 70 | PEROX | - | 5000 | 45,29 |
| 193622 | OR | 44,17 | 1,78 | EPDM | 70 | PEROX | PACK | 150 | 49,82 |
| 189514 | OR | 46 | 2 | EPDM | 70 | PEROX | - | 5000 | 56,61 |
| 190227 | OR | 46 | 2 | EPDM | 70 | PEROX | PACK | 100 | 61,03 |
| 191954 | OR | 46,99 | 5,33 | EPDM | 70 | PEROX | - | 1000 | 154,85 |
| 192022 | OR | 46,99 | 5,33 | EPDM | 70 | PEROX | PACK | 50 | 164,95 |
| 189582 | OR | 47,22 | 3,53 | EPDM | 70 | PEROX | - | 2000 | 74,20 |
| 190135 | OR | 47,22 | 3,53 | EPDM | 70 | PEROX | PACK | 100 | 79,17 |
| 191921 | OR | 47,29 | 2,62 | EPDM | 70 | PEROX | - | 2500 | 62,71 |
| 191988 | OR | 47,29 | 2,62 | EPDM | 70 | PEROX | PACK | 100 | 68,18 |
| 187953 | OR | 47,35 | 1,78 | EPDM | 70 | PEROX | - | 5000 | 61,65 |
| 197630 | OR | 47,35 | 1,78 | EPDM | 70 | PEROX | PACK | 150 | 65,75 |
| 193114 | OR | 48,9 | 2,62 | EPDM | 70 | PEROX | - | 2500 | 62,01 |
| 193630 | OR | 48,9 | 2,62 | EPDM | 70 | PEROX | PACK | 100 | 68,28 |
| 189567 | OR | 50 | 3 | EPDM | 70 | PEROX | - | 2500 | 66,19 |
| 190232 | OR | 50 | 3 | EPDM | 70 | PEROX | PACK | 100 | 70,62 |
| 189600 | OR | 50 | 4 | EPDM | 70 | PEROX | - | 1500 | 99,81 |
| 190248 | OR | 50 | 4 | EPDM | 70 | PEROX | PACK | 50 | 107,47 |
| 189607 | OR | 50,17 | 5,33 | EPDM | 70 | PEROX | - | 750 | 174,18 |
| 190257 | OR | 50,17 | 5,33 | EPDM | 70 | PEROX | PACK | 25 | 189,01 |
| 189583 | OR | 50,39 | 3,53 | EPDM | 70 | PEROX | - | 1500 | 94,41 |
| 190150 | OR | 50,39 | 3,53 | EPDM | 70 | PEROX | PACK | 50 | 102,07 |

| CODICE | TIPO | d1 mm | d2 mm | MAT. | SH | MAT | CONFEZIONAMENTO | | LISTINO 5-2016 X 100 € |
|---|---|---|---|---|---|---|---|---|---|
| 193115 | OR | 50,47 | 2,62 | EPDM | 70 | PEROX | - | 2500 | 64,80 |
| 193633 | OR | 50,47 | 2,62 | EPDM | 70 | PEROX | PACK | 100 | 71,24 |
| 191922 | OR | 52,07 | 2,62 | EPDM | 70 | PEROX | - | 2500 | 66,19 |
| 191989 | OR | 52,07 | 2,62 | EPDM | 70 | PEROX | PACK | 100 | 71,60 |
| 191955 | OR | 53,34 | 5,33 | EPDM | 70 | PEROX | - | 750 | 161,99 |
| 192023 | OR | 53,34 | 5,33 | EPDM | 70 | PEROX | PACK | 50 | 172,95 |
| 189584 | OR | 53,57 | 3,53 | EPDM | 70 | PEROX | - | 1500 | 95,80 |
| 190243 | OR | 53,57 | 3,53 | EPDM | 70 | PEROX | PACK | 50 | 103,47 |
| 193116 | OR | 53,64 | 2,62 | EPDM | 70 | PEROX | - | 2500 | 67,93 |
| 193634 | OR | 53,64 | 2,62 | EPDM | 70 | PEROX | PACK | 100 | 74,73 |
| 193117 | OR | 55,25 | 2,62 | EPDM | 70 | PEROX | - | 2500 | 78,38 |
| 193636 | OR | 55,25 | 2,62 | EPDM | 70 | PEROX | PACK | 100 | 86,22 |
| 191956 | OR | 56,52 | 5,33 | EPDM | 70 | PEROX | - | 750 | 191,60 |
| 192024 | OR | 56,52 | 5,33 | EPDM | 70 | PEROX | PACK | 25 | 207,97 |
| 189585 | OR | 56,74 | 3,53 | EPDM | 70 | PEROX | - | 1500 | 96,67 |
| 190151 | OR | 56,74 | 3,53 | EPDM | 70 | PEROX | PACK | 50 | 105,26 |
| 191923 | OR | 56,82 | 2,62 | EPDM | 70 | PEROX | - | 2500 | 80,12 |
| 191990 | OR | 56,82 | 2,62 | EPDM | 70 | PEROX | PACK | 50 | 88,64 |
| 193071 | OR | 56,87 | 1,78 | EPDM | 70 | PEROX | - | 5000 | 63,05 |
| 193631 | OR | 56,87 | 1,78 | EPDM | 70 | PEROX | PACK | 100 | 69,33 |
| 189535 | OR | 58,42 | 2,62 | EPDM | 70 | PEROX | - | 2500 | 83,61 |
| 190139 | OR | 58,42 | 2,62 | EPDM | 70 | PEROX | PACK | 50 | 91,76 |
| 191957 | OR | 59,69 | 5,33 | EPDM | 70 | PEROX | - | 750 | 200,31 |
| 192025 | OR | 59,69 | 5,33 | EPDM | 70 | PEROX | PACK | 25 | - |
| 189586 | OR | 59,92 | 3,53 | EPDM | 70 | PEROX | - | 1500 | 98,59 |
| 190244 | OR | 59,92 | 3,53 | EPDM | 70 | PEROX | PACK | 50 | 106,25 |
| 189568 | OR | 60 | 3 | EPDM | 70 | PEROX | - | 2000 | 101,03 |
| 190240 | OR | 60 | 3 | EPDM | 70 | PEROX | PACK | 50 | 110,76 |
| 193072 | OR | 60,05 | 1,78 | EPDM | 70 | PEROX | - | 2500 | 80,82 |
| 193637 | OR | 60,05 | 1,78 | EPDM | 70 | PEROX | PACK | 100 | 88,83 |
| 193118 | OR | 61,6 | 2,62 | EPDM | 70 | PEROX | - | 2500 | 84,48 |
| 193639 | OR | 61,6 | 2,62 | EPDM | 70 | PEROX | PACK | 50 | 93,01 |
| 189608 | OR | 62,87 | 5,33 | EPDM | 70 | PEROX | - | 500 | 191,60 |
| 190164 | OR | 62,87 | 5,33 | EPDM | 70 | PEROX | PACK | 25 | 205,54 |
| 191911 | OR | 63 | 2 | EPDM | 70 | PEROX | - | 2500 | 83,61 |
| 191978 | OR | 63 | 2 | EPDM | 70 | PEROX | PACK | 50 | 92,12 |
| 189587 | OR | 63,09 | 3,53 | EPDM | 70 | PEROX | - | 1500 | 148,06 |
| 190245 | OR | 63,09 | 3,53 | EPDM | 70 | PEROX | PACK | 50 | 158,16 |
| 189536 | OR | 63,17 | 2,62 | EPDM | 70 | PEROX | - | 2500 | 92,32 |
| 190237 | OR | 63,17 | 2,62 | EPDM | 70 | PEROX | PACK | 50 | 100,47 |
| 191924 | OR | 64,77 | 2,62 | EPDM | 70 | PEROX | - | 2500 | 94,06 |
| 191991 | OR | 64,77 | 2,62 | EPDM | 70 | PEROX | PACK | 50 | 108,57 |
| 191932 | OR | 65 | 3 | EPDM | 70 | PEROX | - | 2000 | 97,54 |
| 191999 | OR | 65 | 3 | EPDM | 70 | PEROX | PACK | 50 | 106,07 |
| 191958 | OR | 66,04 | 5,33 | EPDM | 70 | PEROX | - | 500 | 209,02 |
| 192026 | OR | 66,04 | 5,33 | EPDM | 70 | PEROX | PACK | 25 | 225,39 |
| 189588 | OR | 66,27 | 3,53 | EPDM | 70 | PEROX | - | 1500 | 139,35 |
| 190246 | OR | 66,27 | 3,53 | EPDM | 70 | PEROX | PACK | 50 | 149,45 |
| 189496 | OR | 66,4 | 1,78 | EPDM | 70 | PEROX | - | 2500 | 92,32 |

| CODICE | TIPO | d1 mm | d2 mm | MAT. | SH | MAT | CONFEZIONAMENTO | | LISTINO 5-2016 X 100 € |
|---|---|---|---|---|---|---|---|---|---|
| 190136 | OR | 66,4 | 1,78 | EPDM | 70 | PEROX | PACK | 50 | 100,47 |
| 191959 | OR | 69,22 | 5,33 | EPDM | 70 | PEROX | - | 500 | 209,02 |
| 192027 | OR | 69,22 | 5,33 | EPDM | 70 | PEROX | PACK | 25 | 225,39 |
| 189537 | OR | 69,52 | 2,62 | EPDM | 70 | PEROX | - | 2500 | 97,54 |
| 190140 | OR | 69,52 | 2,62 | EPDM | 70 | PEROX | PACK | 50 | 105,70 |
| 189569 | OR | 70 | 3 | EPDM | 70 | PEROX | - | 2000 | 141,09 |
| 190241 | OR | 70 | 3 | EPDM | 70 | PEROX | PACK | 50 | 150,82 |
| 189609 | OR | 72,39 | 5,33 | EPDM | 70 | PEROX | - | 500 | 209,02 |
| 190165 | OR | 72,39 | 5,33 | EPDM | 70 | PEROX | PACK | 25 | 222,96 |
| 191951 | OR | 75 | 4 | EPDM | 70 | PEROX | - | 1000 | 170,70 |
| 192019 | OR | 75 | 4 | EPDM | 70 | PEROX | PACK | 50 | 181,65 |
| 191960 | OR | 75,57 | 5,33 | EPDM | 70 | PEROX | - | 500 | 217,73 |
| 192028 | OR | 75,57 | 5,33 | EPDM | 70 | PEROX | PACK | 25 | 231,67 |
| 189589 | OR | 75,79 | 3,53 | EPDM | 70 | PEROX | - | 1000 | 155,90 |
| 190152 | OR | 75,79 | 3,53 | EPDM | 70 | PEROX | PACK | 50 | 168,43 |
| 189538 | OR | 75,87 | 2,62 | EPDM | 70 | PEROX | - | 2000 | 139,35 |
| 190141 | OR | 75,87 | 2,62 | EPDM | 70 | PEROX | PACK | 50 | 148,23 |
| 191961 | OR | 78,74 | 5,33 | EPDM | 70 | PEROX | - | 500 | 222,96 |
| 192029 | OR | 78,74 | 5,33 | EPDM | 70 | PEROX | PACK | 25 | 236,89 |
| 190573 | OR | 80 | 2 | EPDM | 70 | PEROX | - | 2500 | 94,06 |
| 191790 | OR | 80 | 2 | EPDM | 70 | PEROX | PACK | 50 | 102,21 |
| 189570 | OR | 80 | 3 | EPDM | 70 | PEROX | - | 1500 | 144,57 |
| 190149 | OR | 80 | 3 | EPDM | 70 | PEROX | PACK | 50 | 154,68 |
| 191962 | OR | 81,92 | 5,33 | EPDM | 70 | PEROX | - | 500 | 233,41 |
| 192030 | OR | 81,92 | 5,33 | EPDM | 70 | PEROX | PACK | 25 | 247,34 |
| 189571 | OR | 82 | 3 | EPDM | 70 | PEROX | - | 1000 | 147,19 |
| 190242 | OR | 82 | 3 | EPDM | 70 | PEROX | PACK | 50 | 160,58 |
| 189539 | OR | 82,22 | 2,62 | EPDM | 70 | PEROX | - | 1500 | 135,87 |
| 190148 | OR | 82,22 | 2,62 | EPDM | 70 | PEROX | PACK | 50 | 145,97 |
| 192838 | OR | 84,1 | 5,7 | EPDM | 70 | PEROX | - | 250 | 296,11 |
| 192849 | OR | 84,1 | 5,7 | EPDM | 70 | PEROX | PACK | 25 | 356,71 |
| 189795 | OR | 85,09 | 5,33 | EPDM | 70 | PEROX | - | 500 | 228,18 |
| 190166 | OR | 85,09 | 5,33 | EPDM | 70 | PEROX | PACK | 25 | 242,20 |
| 189590 | OR | 85,32 | 3,53 | EPDM | 70 | PEROX | - | 1000 | 172,45 |
| 190247 | OR | 85,32 | 3,53 | EPDM | 70 | PEROX | PACK | 50 | 184,98 |
| 191963 | OR | 88,27 | 5,33 | EPDM | 70 | PEROX | - | 500 | 242,12 |
| 192031 | OR | 88,27 | 5,33 | EPDM | 70 | PEROX | PACK | 25 | 256,05 |
| 191934 | OR | 88,49 | 3,53 | EPDM | 70 | PEROX | - | 1000 | 191,60 |
| 192001 | OR | 88,49 | 3,53 | EPDM | 70 | PEROX | PACK | 25 | 205,54 |
| 189540 | OR | 88,57 | 2,62 | EPDM | 70 | PEROX | - | 1500 | 156,77 |
| 190238 | OR | 88,57 | 2,62 | EPDM | 70 | PEROX | PACK | 50 | 167,04 |
| 191964 | OR | 91,44 | 5,33 | EPDM | 70 | PEROX | - | 500 | 245,60 |
| 192032 | OR | 91,44 | 5,33 | EPDM | 70 | PEROX | PACK | 25 | 259,54 |
| 191965 | OR | 94,62 | 5,33 | EPDM | 70 | PEROX | - | 500 | 249,95 |
| 192033 | OR | 94,62 | 5,33 | EPDM | 70 | PEROX | PACK | 25 | 263,89 |
| 193127 | OR | 94,84 | 3,53 | EPDM | 70 | PEROX | - | 1000 | 188,12 |
| 193643 | OR | 94,84 | 3,53 | EPDM | 70 | PEROX | PACK | 25 | 206,93 |
| 191966 | OR | 97,79 | 5,33 | EPDM | 70 | PEROX | - | 500 | 249,95 |
| 192034 | OR | 97,79 | 5,33 | EPDM | 70 | PEROX | PACK | 25 | 263,89 |

| CODICE | TIPO | d1 mm | d2 mm | MAT. | SH | MAT | CONFEZIONAMENTO | | LISTINO 5-2016 X 100 € |
|---|---|---|---|---|---|---|---|---|---|
| 191912 | OR | 100 | 2 | EPDM | 70 | PEROX | - | 1000 | 217,73 |
| 191979 | OR | 100 | 2 | EPDM | 70 | PEROX | PACK | 25 | 231,67 |
| 189604 | OR | 100 | 5 | EPDM | 70 | PEROX | - | 500 | 296,11 |
| 190256 | OR | 100 | 5 | EPDM | 70 | PEROX | PACK | 25 | 310,05 |
| 189610 | OR | 100,97 | 5,33 | EPDM | 70 | PEROX | - | 250 | 313,53 |
| 190167 | OR | 100,97 | 5,33 | EPDM | 70 | PEROX | PACK | 25 | 328,45 |
| 189591 | OR | 101,19 | 3,53 | EPDM | 70 | PEROX | - | 750 | 193,34 |
| 190159 | OR | 101,19 | 3,53 | EPDM | 70 | PEROX | PACK | 25 | 207,28 |
| 189541 | OR | 101,27 | 2,62 | EPDM | 70 | PEROX | - | 1000 | 170,70 |
| 190239 | OR | 101,27 | 2,62 | EPDM | 70 | PEROX | PACK | 50 | 183,24 |
| 189497 | OR | 101,32 | 1,78 | EPDM | 70 | PEROX | - | 1000 | 161,99 |
| 190138 | OR | 101,32 | 1,78 | EPDM | 70 | PEROX | PACK | 50 | 174,53 |
| 191967 | OR | 104,14 | 5,33 | EPDM | 70 | PEROX | - | 500 | 306,57 |
| 192035 | OR | 104,14 | 5,33 | EPDM | 70 | PEROX | PACK | 25 | 320,50 |
| 189592 | OR | 104,37 | 3,53 | EPDM | 70 | PEROX | - | 750 | 198,57 |
| 190160 | OR | 104,37 | 3,53 | EPDM | 70 | PEROX | PACK | 25 | 212,51 |
| 189611 | OR | 107,32 | 5,33 | EPDM | 70 | PEROX | - | 250 | 311,61 |
| 190168 | OR | 107,32 | 5,33 | EPDM | 70 | PEROX | PACK | 25 | 326,53 |
| 189593 | OR | 107,54 | 3,53 | EPDM | 70 | PEROX | - | 750 | 240,37 |
| 190251 | OR | 107,54 | 3,53 | EPDM | 70 | PEROX | PACK | 25 | 255,21 |
| 189542 | OR | 107,62 | 2,62 | EPDM | 70 | PEROX | - | 1000 | 206,93 |
| 190154 | OR | 107,62 | 2,62 | EPDM | 70 | PEROX | PACK | 25 | 223,29 |
| 189594 | OR | 110,72 | 3,53 | EPDM | 70 | PEROX | - | 750 | 242,12 |
| 190161 | OR | 110,72 | 3,53 | EPDM | 70 | PEROX | PACK | 25 | 256,05 |
| 189612 | OR | 113,67 | 5,33 | EPDM | 70 | PEROX | - | 250 | 348,37 |
| 190169 | OR | 113,67 | 5,33 | EPDM | 70 | PEROX | PACK | 25 | 363,28 |
| 189595 | OR | 113,89 | 3,53 | EPDM | 70 | PEROX | - | 750 | 242,12 |
| 190162 | OR | 113,89 | 3,53 | EPDM | 70 | PEROX | PACK | 25 | 256,05 |
| 189544 | OR | 113,97 | 2,62 | EPDM | 70 | PEROX | - | 1000 | 209,02 |
| 190155 | OR | 113,97 | 2,62 | EPDM | 70 | PEROX | PACK | 25 | 225,39 |
| 189596 | OR | 117,07 | 3,53 | EPDM | 70 | PEROX | - | 750 | 247,34 |
| 190163 | OR | 117,07 | 3,53 | EPDM | 70 | PEROX | PACK | 25 | 261,28 |
| 189601 | OR | 120 | 4 | EPDM | 70 | PEROX | - | 500 | 261,28 |
| 190255 | OR | 120 | 4 | EPDM | 70 | PEROX | PACK | 25 | 275,21 |
| 189545 | OR | 120,32 | 2,62 | EPDM | 70 | PEROX | - | 1000 | 219,47 |
| 190156 | OR | 120,32 | 2,62 | EPDM | 70 | PEROX | PACK | 25 | 235,85 |
| 189597 | OR | 123,42 | 3,53 | EPDM | 70 | PEROX | - | 500 | 254,31 |
| 190252 | OR | 123,42 | 3,53 | EPDM | 70 | PEROX | PACK | 25 | 269,15 |
| 193128 | OR | 126,59 | 3,53 | EPDM | 70 | PEROX | - | 500 | 238,63 |
| 193644 | OR | 126,59 | 3,53 | EPDM | 70 | PEROX | PACK | 25 | 262,50 |
| 189546 | OR | 126,67 | 2,62 | EPDM | 70 | PEROX | - | 1000 | 226,44 |
| 190157 | OR | 126,67 | 2,62 | EPDM | 70 | PEROX | PACK | 25 | 242,81 |
| 189613 | OR | 129,54 | 5,33 | EPDM | 70 | PEROX | - | 250 | 388,43 |
| 190258 | OR | 129,54 | 5,33 | EPDM | 70 | PEROX | PACK | 25 | 407,23 |
| 189598 | OR | 129,77 | 3,53 | EPDM | 70 | PEROX | - | 500 | 269,99 |
| 190254 | OR | 129,77 | 3,53 | EPDM | 70 | PEROX | PACK | 25 | 283,92 |
| 189547 | OR | 139,37 | 2,62 | EPDM | 70 | PEROX | - | 1000 | 271,73 |
| 190158 | OR | 139,37 | 2,62 | EPDM | 70 | PEROX | PACK | 25 | 288,10 |
| 193134 | OR | 142,24 | 5,33 | EPDM | 70 | PEROX | - | 250 | 484,23 |

| CODICE | TIPO | d1 mm | d2 mm | MAT. | SH | MAT | CONFEZIONAMENTO | | LISTINO 5-2016 X 100 € |
|---|---|---|---|---|---|---|---|---|---|
| 193646 | OR | 142,24 | 5,33 | EPDM | 70 | PEROX | PACK | 10 | 532,66 |
| 189548 | OR | 152,07 | 2,62 | EPDM | 70 | PEROX | - | 750 | 306,57 |
| 190249 | OR | 152,07 | 2,62 | EPDM | 70 | PEROX | PACK | 25 | 320,50 |
| 189614 | OR | 158,12 | 5,33 | EPDM | 70 | PEROX | - | 250 | 475,52 |
| 190170 | OR | 158,12 | 5,33 | EPDM | 70 | PEROX | PACK | 10 | 657,37 |
| 189615 | OR | 164,47 | 5,33 | EPDM | 70 | PEROX | - | 250 | 487,72 |
| 190261 | OR | 164,47 | 5,33 | EPDM | 70 | PEROX | PACK | 10 | 519,77 |
| 193142 | OR | 164,47 | 6,99 | EPDM | 70 | PEROX | - | 150 | 818,67 |
| 193652 | OR | 164,47 | 6,99 | EPDM | 70 | PEROX | PACK | 5 | 900,53 |
| 193119 | OR | 164,77 | 2,62 | EPDM | 70 | PEROX | - | 750 | 313,53 |
| 193645 | OR | 164,77 | 2,62 | EPDM | 70 | PEROX | PACK | 25 | 344,89 |
| 189616 | OR | 170,82 | 5,33 | EPDM | 70 | PEROX | - | 250 | 553,91 |
| 190263 | OR | 170,82 | 5,33 | EPDM | 70 | PEROX | PACK | 10 | 585,93 |
| 189549 | OR | 171,12 | 2,62 | EPDM | 70 | PEROX | - | 750 | 383,21 |
| 190250 | OR | 171,12 | 2,62 | EPDM | 70 | PEROX | PACK | 25 | 397,14 |
| 189617 | OR | 177,17 | 5,33 | EPDM | 70 | PEROX | - | 250 | 574,81 |
| 190264 | OR | 177,17 | 5,33 | EPDM | 70 | PEROX | PACK | 10 | 606,86 |
| 193143 | OR | 177,17 | 6,99 | EPDM | 70 | PEROX | - | 150 | 836,09 |
| 193653 | OR | 177,17 | 6,99 | EPDM | 70 | PEROX | PACK | 5 | 919,69 |
| 189618 | OR | 183,52 | 5,33 | EPDM | 70 | PEROX | - | 250 | 583,52 |
| 190171 | OR | 183,52 | 5,33 | EPDM | 70 | PEROX | PACK | 10 | 765,36 |
| 189605 | OR | 190 | 5 | EPDM | 70 | PEROX | - | 250 | 574,81 |
| 190260 | OR | 190 | 5 | EPDM | 70 | PEROX | PACK | 10 | 606,86 |
| 193129 | OR | 196,44 | 3,53 | EPDM | 70 | PEROX | - | 500 | 522,55 |
| 193647 | OR | 196,44 | 3,53 | EPDM | 70 | PEROX | PACK | 10 | 574,81 |
| 189602 | OR | 200 | 4 | EPDM | 70 | PEROX | - | 500 | 522,55 |
| 190259 | OR | 200 | 4 | EPDM | 70 | PEROX | PACK | 10 | 554,62 |
| 193135 | OR | 202,57 | 5,33 | EPDM | 70 | PEROX | - | 200 | 731,58 |
| 193648 | OR | 202,57 | 5,33 | EPDM | 70 | PEROX | PACK | 10 | 804,73 |
| 193144 | OR | 202,57 | 6,99 | EPDM | 70 | PEROX | - | 100 | 870,92 |
| 193654 | OR | 202,57 | 6,99 | EPDM | 70 | PEROX | PACK | 5 | 958,02 |
| 193136 | OR | 208,92 | 5,33 | EPDM | 70 | PEROX | - | 200 | 748,99 |
| 193649 | OR | 208,92 | 5,33 | EPDM | 70 | PEROX | PACK | 10 | 823,89 |
| 193137 | OR | 215,27 | 5,33 | EPDM | 70 | PEROX | - | 200 | 757,70 |
| 193650 | OR | 215,27 | 5,33 | EPDM | 70 | PEROX | PACK | 10 | 833,47 |
| 193145 | OR | 215,27 | 6,99 | EPDM | 70 | PEROX | - | 100 | 923,18 |
| 193656 | OR | 215,27 | 6,99 | EPDM | 70 | PEROX | PACK | 5 | 1.015,50 |
| 193130 | OR | 221,84 | 3,53 | EPDM | 70 | PEROX | - | 250 | 923,18 |
| 193655 | OR | 221,84 | 3,53 | EPDM | 70 | PEROX | PACK | 5 | 1.015,50 |
| 193138 | OR | 227,97 | 5,33 | EPDM | 70 | PEROX | - | 200 | 1.114,78 |
| 193658 | OR | 227,97 | 5,33 | EPDM | 70 | PEROX | PACK | 5 | 1.226,26 |
| 193139 | OR | 234,32 | 5,33 | EPDM | 70 | PEROX | - | 200 | 1.132,20 |
| 193659 | OR | 234,32 | 5,33 | EPDM | 70 | PEROX | PACK | 5 | 1.245,42 |
| 193131 | OR | 405,26 | 3,53 | EPDM | 70 | PEROX | - | 50 | 3.222,42 |
| 193140 | OR | 405,26 | 5,33 | EPDM | 70 | PEROX | - | 50 | 3.779,81 |
| 193141 | OR | 506,86 | 5,33 | EPDM | 70 | PEROX | - | 25 | 4.633,31 |

| CODICE | TIPO | d1 mm | d2 mm | MAT. | SH | MAT. | COLORE | CONFEZIONAMENTO | LISTINO 5-2016 X 100 € |
|---|---|---|---|---|---|---|---|---|---|
| 196819 | OR | 7 | 1 | FKM | 75 | PEROX | NERO | P250 | 11,68 |
| 196820 | OR | 8 | 1 | FKM | 75 | PEROX | NERO | P250 | 12,45 |
| 194866 | OR | 5 | 1,5 | FKM | 75 | PEROX | NERO | P250 | 13,22 |
| 195495 | OR | 4,47 | 1,78 | FKM | 75 | PEROX | NERO | P250 | 13,22 |
| 196822 | OR | 9,25 | 1,78 | FKM | 75 | PEROX | NERO | P100 | 20,35 |
| 196823 | OR | 10,82 | 1,78 | FKM | 75 | PEROX | NERO | P100 | 22,31 |
| 195496 | OR | 12,42 | 1,78 | FKM | 75 | PEROX | NERO | P100 | 24,97 |
| 196824 | OR | 17,17 | 1,78 | FKM | 75 | PEROX | NERO | P100 | 32,38 |
| 196825 | OR | 21,95 | 1,78 | FKM | 75 | PEROX | NERO | P50 | 48,88 |
| 196826 | OR | 25,12 | 1,78 | FKM | 75 | PEROX | NERO | P50 | 50,07 |
| 196827 | OR | 26,7 | 1,78 | FKM | 75 | PEROX | NERO | P50 | 56,64 |
| 196828 | OR | 29,87 | 1,78 | FKM | 75 | PEROX | NERO | P50 | 65,17 |
| 196829 | OR | 41 | 1,78 | FKM | 75 | PEROX | NERO | P25 | 101,82 |
| 194867 | OR | 10 | 2 | FKM | 75 | PEROX | NERO | P100 | 21,12 |
| 194868 | OR | 12 | 2 | FKM | 75 | PEROX | NERO | P100 | 22,03 |
| 196830 | OR | 14 | 2 | FKM | 75 | PEROX | NERO | P100 | 22,66 |
| 196831 | OR | 18 | 2 | FKM | 75 | PEROX | NERO | P100 | 32,38 |
| 194869 | OR | 17 | 2,5 | FKM | 75 | PEROX | NERO | P50 | 68,32 |
| 194870 | OR | 20 | 2,5 | FKM | 75 | PEROX | NERO | P50 | 71,40 |
| 195497 | OR | 10,77 | 2,62 | FKM | 75 | PEROX | NERO | P50 | 43,50 |
| 196832 | OR | 13,94 | 2,62 | FKM | 75 | PEROX | NERO | P50 | 44,27 |
| 196833 | OR | 18,72 | 2,62 | FKM | 75 | PEROX | NERO | P50 | 67,90 |
| 196834 | OR | 21,89 | 2,62 | FKM | 75 | PEROX | NERO | P25 | 74,69 |
| 195488 | OR | 23,47 | 2,62 | FKM | 75 | PEROX | NERO | P25 | 80,14 |
| 196836 | OR | 25,07 | 2,62 | FKM | 75 | PEROX | NERO | P25 | 94,06 |
| 196837 | OR | 26,64 | 2,62 | FKM | 75 | PEROX | NERO | P25 | 93,29 |
| 196838 | OR | 32,99 | 2,62 | FKM | 75 | PEROX | NERO | P25 | 95,66 |
| 196839 | OR | 37,77 | 2,62 | FKM | 75 | PEROX | NERO | P25 | 108,81 |
| 196840 | OR | 69,52 | 2,62 | FKM | 75 | PEROX | NERO | P10 | 248,39 |
| 196841 | OR | 20 | 3 | FKM | 75 | PEROX | NERO | P50 | 66,78 |
| 196842 | OR | 23 | 3 | FKM | 75 | PEROX | NERO | P25 | 76,22 |
| 196843 | OR | 50 | 3 | FKM | 75 | PEROX | NERO | P10 | 174,69 |
| 196844 | OR | 60 | 3 | FKM | 75 | PEROX | NERO | P10 | 185,52 |
| 195498 | OR | 20,22 | 3,53 | FKM | 75 | PEROX | NERO | P25 | 90,98 |
| 195499 | OR | 21,82 | 3,53 | FKM | 75 | PEROX | NERO | P25 | 93,29 |
| 196845 | OR | 23,39 | 3,53 | FKM | 75 | PEROX | NERO | P25 | 101,05 |
| 196846 | OR | 24,99 | 3,53 | FKM | 75 | PEROX | NERO | P25 | 103,43 |
| 196847 | OR | 28,17 | 3,53 | FKM | 75 | PEROX | NERO | P25 | 120,49 |
| 196848 | OR | 32,92 | 3,53 | FKM | 75 | PEROX | NERO | P25 | 142,24 |
| 196849 | OR | 34,52 | 3,53 | FKM | 75 | PEROX | NERO | P25 | 143,01 |
| 196850 | OR | 36,09 | 3,53 | FKM | 75 | PEROX | NERO | P25 | 151,54 |
| 195500 | OR | 37,69 | 3,53 | FKM | 75 | PEROX | NERO | P25 | 155,38 |
| 196851 | OR | 40,87 | 3,53 | FKM | 75 | PEROX | NERO | P10 | 175,45 |
| 196852 | OR | 47,22 | 3,53 | FKM | 75 | PEROX | NERO | P10 | 201,82 |
| 195501 | OR | 50,39 | 3,53 | FKM | 75 | PEROX | NERO | P10 | 205,73 |
| 196853 | OR | 53,57 | 3,53 | FKM | 75 | PEROX | NERO | P10 | 217,34 |
| 196854 | OR | 56,74 | 3,53 | FKM | 75 | PEROX | NERO | P10 | 232,87 |
| 197574 | OR | 32 | 4 | FKM | 75 | PEROX | NERO | P10 | - |
| 196855 | OR | 30 | 5 | FKM | 75 | PEROX | NERO | P10 | 256,15 |

| CODICE | TIPO | d1 mm | d2 mm | MAT. | SH | MAT. | COLORE | CONFEZIONAMENTO | LISTINO 5-2016 X 100 € |
|---|---|---|---|---|---|---|---|---|---|
| 196856 | OR | 75 | 5 | FKM | 75 | PEROX | NERO | P5 | 514,62 |
| 196857 | OR | 85 | 5 | FKM | 75 | PEROX | NERO | P5 | 530,14 |
| 195502 | OR | 32,69 | 5,33 | FKM | 75 | PEROX | NERO | P10 | 225,10 |
| 196858 | OR | 46,99 | 5,33 | FKM | 75 | PEROX | NERO | P10 | 249,93 |
| 196859 | OR | 50,17 | 5,33 | FKM | 75 | PEROX | NERO | P10 | 260,07 |
| 196860 | OR | 221,62 | 5,33 | FKM | 75 | PEROX | NERO | P3 | 1.110,00 |

FKM 75 VERDE

# O-RING

| CODICE | TIPO | d1 mm | d2 mm | MAT. | SH | COLORE | LISTINO 5-2016 X 100 € |
|---|---|---|---|---|---|---|---|
| 196764 | OR | 4 | 1 | FKM | 75 | VERDE | 9,97 |
| 195596 | OR | 8 | 1 | FKM | 75 | VERDE | 13,04 |
| 190332 | OR | 10 | 1 | FKM | 75 | VERDE | 13,94 |
| 190333 | OR | 13 | 1 | FKM | 75 | VERDE | 15,30 |
| 190334 | OR | 14 | 1 | FKM | 75 | VERDE | 15,69 |
| 192276 | OR | 16 | 1 | FKM | 75 | VERDE | 17,15 |
| 196710 | OR | 7,5 | 1,5 | FKM | 75 | VERDE | 11,36 |
| 192226 | OR | 18 | 1,5 | FKM | 75 | VERDE | 20,25 |
| 193231 | OR | 2,57 | 1,78 | FKM | 75 | VERDE | 9,97 |
| 193232 | OR | 2,9 | 1,78 | FKM | 75 | VERDE | 10,28 |
| 193233 | OR | 3,68 | 1,78 | FKM | 75 | VERDE | 10,35 |
| 193234 | OR | 4,47 | 1,78 | FKM | 75 | VERDE | 10,43 |
| 190433 | OR | 5,28 | 1,78 | FKM | 75 | VERDE | 10,59 |
| 193235 | OR | 6,07 | 1,78 | FKM | 75 | VERDE | 10,66 |
| 192206 | OR | 7,65 | 1,78 | FKM | 75 | VERDE | 10,82 |
| 190335 | OR | 9,25 | 1,78 | FKM | 75 | VERDE | 11,13 |
| 193236 | OR | 10,82 | 1,78 | FKM | 75 | VERDE | 11,59 |
| 190336 | OR | 11,1 | 1,78 | FKM | 75 | VERDE | 12,13 |
| 190337 | OR | 12,42 | 1,78 | FKM | 75 | VERDE | 16,30 |
| 190338 | OR | 14 | 1,78 | FKM | 75 | VERDE | 17,39 |
| 190339 | OR | 15,6 | 1,78 | FKM | 75 | VERDE | 17,31 |
| 193237 | OR | 17,17 | 1,78 | FKM | 75 | VERDE | 18,85 |
| 190340 | OR | 18,77 | 1,78 | FKM | 75 | VERDE | 17,70 |
| 192207 | OR | 20,35 | 1,78 | FKM | 75 | VERDE | 26,43 |
| 192208 | OR | 21,95 | 1,78 | FKM | 75 | VERDE | 26,58 |
| 190341 | OR | 23,52 | 1,78 | FKM | 75 | VERDE | 27,97 |
| 192209 | OR | 25,12 | 1,78 | FKM | 75 | VERDE | 29,67 |
| 193238 | OR | 29,87 | 1,78 | FKM | 75 | VERDE | 37,94 |
| 194299 | OR | 34,65 | 1,78 | FKM | 75 | VERDE | 40,57 |
| 194300 | OR | 37,82 | 1,78 | FKM | 75 | VERDE | 44,20 |
| 194301 | OR | 41 | 1,78 | FKM | 75 | VERDE | 47,75 |
| 192210 | OR | 8 | 2 | FKM | 75 | VERDE | 12,21 |
| 192211 | OR | 10 | 2 | FKM | 75 | VERDE | 15,38 |
| 196698 | OR | 11 | 2 | FKM | 75 | VERDE | 16,30 |
| 190342 | OR | 12 | 2 | FKM | 75 | VERDE | 18,55 |
| 190343 | OR | 15 | 2 | FKM | 75 | VERDE | 18,85 |
| 190344 | OR | 20 | 2 | FKM | 75 | VERDE | 19,94 |
| 192213 | OR | 21 | 2 | FKM | 75 | VERDE | 28,82 |
| 192215 | OR | 23 | 2 | FKM | 75 | VERDE | 30,68 |
| 192216 | OR | 24 | 2 | FKM | 75 | VERDE | 31,53 |
| 190345 | OR | 26 | 2 | FKM | 75 | VERDE | 36,94 |
| 190346 | OR | 27 | 2 | FKM | 75 | VERDE | 43,20 |
| 192217 | OR | 55 | 2 | FKM | 75 | VERDE | 86,55 |
| 196766 | OR | 15,3 | 2,2 | FKM | 75 | VERDE | 30,91 |
| 190347 | OR | 13,3 | 2,4 | FKM | 75 | VERDE | 31,00 |
| 195595 | OR | 15,6 | 2,4 | FKM | 75 | VERDE | 33,12 |
| 190348 | OR | 16,3 | 2,4 | FKM | 75 | VERDE | 34,31 |
| 190349 | OR | 20,3 | 2,4 | FKM | 75 | VERDE | 35,16 |
| 192218 | OR | 25,3 | 2,4 | FKM | 75 | VERDE | 46,44 |

| CODICE | TIPO | d1 mm | d2 mm | MAT. | SH | COLORE | LISTINO 5-2016 X 100 € |
|---|---|---|---|---|---|---|---|
| 192278 | OR | 19,18 | 2,46 | FKM | 75 | VERDE | 44,20 |
| 190350 | OR | 9 | 2,5 | FKM | 75 | VERDE | 18,00 |
| 190351 | OR | 12 | 2,5 | FKM | 75 | VERDE | 23,49 |
| 190352 | OR | 15 | 2,5 | FKM | 75 | VERDE | 27,97 |
| 190353 | OR | 16 | 2,5 | FKM | 75 | VERDE | 29,67 |
| 190354 | OR | 17 | 2,5 | FKM | 75 | VERDE | 29,75 |
| 190355 | OR | 25 | 2,5 | FKM | 75 | VERDE | 46,44 |
| 190356 | OR | 32 | 2,5 | FKM | 75 | VERDE | 67,61 |
| 190357 | OR | 38 | 2,5 | FKM | 75 | VERDE | 73,02 |
| 192219 | OR | 55 | 2,5 | FKM | 75 | VERDE | 112,59 |
| 193483 | OR | 85 | 2,5 | FKM | 75 | VERDE | 243,25 |
| 193484 | OR | 90 | 2,5 | FKM | 75 | VERDE | 265,90 |
| 190434 | OR | 5,23 | 2,62 | FKM | 75 | VERDE | 10,97 |
| 197184 | OR | 7,59 | 2,62 | FKM | 75 | VERDE | 18,85 |
| 193239 | OR | 9,19 | 2,62 | FKM | 75 | VERDE | 19,40 |
| 193240 | OR | 10,77 | 2,62 | FKM | 75 | VERDE | 22,95 |
| 193241 | OR | 12,37 | 2,62 | FKM | 75 | VERDE | 26,04 |
| 193242 | OR | 15,54 | 2,62 | FKM | 75 | VERDE | 30,91 |
| 192220 | OR | 15,88 | 2,62 | FKM | 75 | VERDE | 31,50 |
| 193243 | OR | 17,12 | 2,62 | FKM | 75 | VERDE | 31,53 |
| 193244 | OR | 18,72 | 2,62 | FKM | 75 | VERDE | 33,77 |
| 193245 | OR | 20,29 | 2,62 | FKM | 75 | VERDE | 35,31 |
| 193246 | OR | 23,47 | 2,62 | FKM | 75 | VERDE | 42,35 |
| 193247 | OR | 25,07 | 2,62 | FKM | 75 | VERDE | 44,59 |
| 194085 | OR | 28,24 | 2,62 | FKM | 75 | VERDE | 48,68 |
| 194302 | OR | 29,82 | 2,62 | FKM | 75 | VERDE | 54,01 |
| 194303 | OR | 36,17 | 2,62 | FKM | 75 | VERDE | 62,59 |
| 191371 | OR | 37,77 | 2,62 | FKM | 75 | VERDE | 73,95 |
| 194304 | OR | 45,69 | 2,62 | FKM | 75 | VERDE | 83,76 |
| 193248 | OR | 59,99 | 2,62 | FKM | 75 | VERDE | 108,10 |
| 194305 | OR | 63,17 | 2,62 | FKM | 75 | VERDE | 117,15 |
| 195737 | OR | 72,69 | 2,62 | FKM | 75 | VERDE | 141,10 |
| 197181 | OR | 113,97 | 2,62 | FKM | 75 | VERDE | 247,81 |
| 190358 | OR | 9 | 3 | FKM | 75 | VERDE | 27,12 |
| 190359 | OR | 14 | 3 | FKM | 75 | VERDE | 35,85 |
| 196708 | OR | 22,2 | 3 | FKM | 75 | VERDE | 52,31 |
| 192221 | OR | 28 | 3 | FKM | 75 | VERDE | 57,10 |
| 194037 | OR | 29 | 3 | FKM | 75 | VERDE | 57,49 |
| 192222 | OR | 37 | 3 | FKM | 75 | VERDE | 75,73 |
| 193485 | OR | 55 | 3 | FKM | 75 | VERDE | 120,55 |
| 190360 | OR | 70 | 3 | FKM | 75 | VERDE | 154,16 |
| 190361 | OR | 74 | 3 | FKM | 75 | VERDE | 163,05 |
| 190362 | OR | 95 | 3 | FKM | 75 | VERDE | 226,41 |
| 116336 | OR | 100 | 3 | FKM | 75 | VERDE | 258,71 |
| 190363 | OR | 18 | 3,5 | FKM | 75 | VERDE | 53,70 |
| 194306 | OR | 5,94 | 3,53 | FKM | 75 | VERDE | 18,47 |
| 193308 | OR | 18,64 | 3,53 | FKM | 75 | VERDE | 55,40 |
| 192223 | OR | 20,22 | 3,53 | FKM | 75 | VERDE | 60,04 |
| 193309 | OR | 21,82 | 3,53 | FKM | 75 | VERDE | 63,98 |

FKM 75 VERDE



| CODICE | TIPO | d1 mm | d2 mm | MAT. | SH | COLORE | LISTINO 5-2016 X 100 € |
|---|---|---|---|---|---|---|---|
| 193310 | OR | 24,99 | 3,53 | FKM | 75 | VERDE | 66,12 |
| 193311 | OR | 28,17 | 3,53 | FKM | 75 | VERDE | 97,36 |
| 193312 | OR | 29,74 | 3,53 | FKM | 75 | VERDE | 98,21 |
| 192224 | OR | 32,92 | 3,53 | FKM | 75 | VERDE | 99,44 |
| 193313 | OR | 37,69 | 3,53 | FKM | 75 | VERDE | 100,07 |
| 193314 | OR | 40,87 | 3,53 | FKM | 75 | VERDE | 106,79 |
| 194307 | OR | 44,04 | 3,53 | FKM | 75 | VERDE | 110,89 |
| 196949 | OR | 46,04 | 3,53 | FKM | 75 | VERDE | 117,61 |
| 193315 | OR | 47,22 | 3,53 | FKM | 75 | VERDE | 120,78 |
| 194308 | OR | 50,39 | 3,53 | FKM | 75 | VERDE | 128,89 |
| 192228 | OR | 53,57 | 3,53 | FKM | 75 | VERDE | 143,34 |
| 193316 | OR | 78,97 | 3,53 | FKM | 75 | VERDE | 215,44 |
| 194309 | OR | 85,32 | 3,53 | FKM | 75 | VERDE | 224,40 |
| 192227 | OR | 88,49 | 3,53 | FKM | 75 | VERDE | 233,29 |
| 194310 | OR | 91,67 | 3,53 | FKM | 75 | VERDE | 244,26 |
| 194311 | OR | 94,84 | 3,53 | FKM | 75 | VERDE | 255,08 |
| 190364 | OR | 145,64 | 3,53 | FKM | 75 | VERDE | 507,76 |
| 192225 | OR | 16 | 4 | FKM | 75 | VERDE | 55,02 |
| 190365 | OR | 20 | 5 | FKM | 75 | VERDE | 122,55 |
| 193317 | OR | 37,47 | 5,33 | FKM | 75 | VERDE | 188,55 |
| 193318 | OR | 40,64 | 5,33 | FKM | 75 | VERDE | 211,80 |
| 194312 | OR | 43,82 | 5,33 | FKM | 75 | VERDE | 216,29 |
| 193319 | OR | 46,99 | 5,33 | FKM | 75 | VERDE | 268,52 |
| 193320 | OR | 50,17 | 5,33 | FKM | 75 | VERDE | 272,15 |
| 194313 | OR | 56,52 | 5,33 | FKM | 75 | VERDE | 282,05 |
| 193321 | OR | 59,69 | 5,33 | FKM | 75 | VERDE | 284,36 |
| 194314 | OR | 62,87 | 5,33 | FKM | 75 | VERDE | 310,79 |
| 193322 | OR | 75,57 | 5,33 | FKM | 75 | VERDE | 405,53 |
| 193323 | OR | 91,44 | 5,33 | FKM | 75 | VERDE | 532,10 |
| 193324 | OR | 107,32 | 5,33 | FKM | 75 | VERDE | 576,76 |
| 194315 | OR | 113,67 | 5,33 | FKM | 75 | VERDE | 599,17 |
| 193325 | OR | 113,67 | 6,99 | FKM | 75 | VERDE | 991,25 |
| 193326 | OR | 126,37 | 6,99 | FKM | 75 | VERDE | 1.248,11 |
| 193327 | OR | 151,77 | 6,99 | FKM | 75 | VERDE | 1.293,16 |
| 190366 | OR | 158,12 | 6,99 | FKM | 75 | VERDE | 1.302,12 |
| 193328 | OR | 164,47 | 6,99 | FKM | 75 | VERDE | 1.380,94 |
| 193329 | OR | 177,17 | 6,99 | FKM | 75 | VERDE | 1.784,23 |
| 193330 | OR | 183,52 | 6,99 | FKM | 75 | VERDE | 1.801,23 |
| 193331 | OR | 393,07 | 6,99 | FKM | 75 | VERDE | 5.103,48 |

| CODICE | NUOVO CODICE | TIPO | MAT. | SH | RIFERIMENTI USA | RIFERIMENTI UK | d1 mm | d2 mm | LISTINO 5-2016 x100 € |
|---|---|---|---|---|---|---|---|---|---|
| | | | | BRITISH STANDARD BS 1806 - AMERICAN STANDARD AS 568 A | | | | | |
| | | OR | FKM | 80 | | | 0,74 | 1,78 | |
| 12539 | | OR | FKM | 80 | 2-4 | 2007 | 1,78 | 1,78 | 12,60 |
| 12540 | 196917 | OR | FKM | 80 | 2-5 | 2010 | 2,57 | 1,78 | 12,60 |
| 12541 | | OR | FKM | 80 | 2-6 | 2012 101 | 2,90 | 1,78 | 12,60 |
| 12542 | 196595 | OR | FKM | 80 | 2-7 | 2015 102 | 3,68 | 1,78 | 12,60 |
| 12543 | | OR | FKM | 80 | 2-8 | 2018 103 | 4,48 | 1,78 | 12,72 |
| 12544 | | OR | FKM | 80 | 2-9 | 2021 104 | 5,28 | 1,78 | 12,72 |
| 12545 | 196370 | OR | FKM | 80 | 2-10 | 2025 105 | 6,07 | 1,78 | 12,82 |
| 12590 | | OR | FKM | 80 | 5-052 | 106 | 6,75 | 1,78 | 12,82 |
| 12546 | | OR | FKM | 80 | 2-11 | 2031 107 | 7,66 | 1,78 | 12,92 |
| 12592 | | OR | FKM | 80 | 5-612 | 108 | 8,73 | 1,78 | 13,24 |
| 12547 | 196596 | OR | FKM | 80 | 2-12 | 2037 110 | 9,25 | 1,78 | 14,08 |
| 12548 | | OR | FKM | 80 | 2-13 | 2043 | 10,82 | 1,78 | 15,09 |
| 12593 | | OR | FKM | 80 | 5-613 | 114 | 11,11 | 1,78 | 16,93 |
| 12549 | | OR | FKM | 80 | 2-14 | 2050 | 12,42 | 1,78 | 18,78 |
| 12550 | | OR | FKM | 80 | 2-15 | 2056 | 14,00 | 1,78 | 20,52 |
| 12551 | | OR | FKM | 80 | 2-16 | 2062 | 15,60 | 1,78 | 22,00 |
| 12552 | | OR | FKM | 80 | 2-17 | 2068 | 17,16 | 1,78 | 23,42 |
| 12553 | 196297 | OR | FKM | 80 | 2-18 | 2075 | 18,77 | 1,78 | 24,53 |
| 12554 | | OR | FKM | 80 | 2-19 | 2081 | 20,35 | 1,78 | 25,79 |
| 12555 | 197269 | OR | FKM | 80 | 2-20 | 2087 | 21,95 | 1,78 | 27,01 |
| 12556 | | OR | FKM | 80 | 2-21 | 2093 | 23,53 | 1,78 | 27,91 |
| 12557 | 196441 | OR | FKM | 80 | 2-22 | 2100 | 25,12 | 1,78 | 28,81 |
| 12558 | | OR | FKM | 80 | 2-23 | 2106 | 26,70 | 1,78 | 30,44 |
| 12559 | | OR | FKM | 80 | 2-24 | 2112 | 28,30 | 1,78 | 31,44 |
| 12560 | | OR | FKM | 80 | 2-25 | 2118 | 29,87 | 1,78 | 32,55 |
| 12561 | | OR | FKM | 80 | 2-26 | 2125 | 31,47 | 1,78 | 33,61 |
| 12562 | 197005 | OR | FKM | 80 | 2-27 | 2131 | 33,05 | 1,78 | 34,72 |
| 12563 | 197252 | OR | FKM | 80 | 2-28 | 2137 | 34,65 | 1,78 | 36,46 |
| 12564 | | OR | FKM | 80 | 2-29 | 2150 | 37,82 | 1,78 | 38,73 |
| 12565 | | OR | FKM | 80 | 2-30 | 2162 | 41,00 | 1,78 | 42,25 |
| 12566 | | OR | FKM | 80 | 2-31 | 2175 | 44,17 | 1,78 | 43,36 |
| 12567 | | OR | FKM | 80 | 2-32 | 2187 | 47,37 | 1,78 | 46,48 |
| 12568 | | OR | FKM | 80 | 2-33 | 2200 | 50,52 | 1,78 | 53,44 |
| 12569 | | OR | FKM | 80 | 2-34 | 2212 | 53,67 | 1,78 | 55,71 |
| 12570 | | OR | FKM | 80 | 2-35 | 2225 | 56,87 | 1,78 | 57,66 |
| 12571 | 196492 | OR | FKM | 80 | 2-36 | 2237 | 60,04 | 1,78 | 59,72 |
| 12572 | | OR | FKM | 80 | 2-37 | 2250 | 63,22 | 1,78 | 64,10 |
| 12573 | | OR | FKM | 80 | 2-38 | 2262 | 66,40 | 1,78 | 66,58 |
| 12574 | 196388 | OR | FKM | 80 | 2-39 | 2275 | 69,57 | 1,78 | 69,11 |
| 12575 | | OR | FKM | 80 | 2-40 | 2287 | 72,76 | 1,78 | 72,27 |
| 12576 | | OR | FKM | 80 | 2-41 | 2300 | 75,92 | 1,78 | 84,20 |
| 12577 | | OR | FKM | 80 | 2-42 | 2325 | 82,28 | 1,78 | 101,82 |
| 12578 | | OR | FKM | 80 | 2-43 | 2350 | 88,62 | 1,78 | 112,21 |
| 12579 | | OR | FKM | 80 | 2-44 | 2375 | 94,97 | 1,78 | 120,92 |
| 12580 | | OR | FKM | 80 | 2-45 | 2400 | 101,34 | 1,78 | 129,04 |
| 12581 | | OR | FKM | 80 | 2-46 | 2425 | 107,70 | 1,78 | 139,02 |
| 12582 | | OR | FKM | 80 | 2-47 | 2450 | 114,00 | 1,78 | 147,04 |

| CODICE | NUOVO CODICE | TIPO | MAT. | SH | RIFERIMENTI USA | RIFERIMENTI UK | d1 mm | d2 mm | LISTINO 5-2016 X 100 € |
|---|---|---|---|---|---|---|---|---|---|
| 12583 | | OR | FKM | 80 | 2-48 | 2475 | 120,40 | 1,78 | 155,05 |
| 12584 | | OR | FKM | 80 | 2-49 | 2500 | 126,76 | 1,78 | 172,99 |
| 12585 | | OR | FKM | 80 | 2-50 | 2525 | 133,07 | 1,78 | 239,17 |
| 13753 | | OR | FKM | 80 | | 2550 | 138,94 | 1,78 | 301,50 |
| 13754 | | OR | FKM | 80 | | 2562 | 142,11 | 1,78 | 324,73 |
| 23852 | | OR | FKM | 80 | 2-102 | | 1,24 | 2,62 | 14,45 |
| 24894 | | OR | FKM | 80 | 2-103 | | 2,06 | 2,62 | 14,45 |
| 24912 | | OR | FKM | 80 | 2-104 | | 2,84 | 2,62 | 15,09 |
| 24927 | | OR | FKM | 80 | 2-105 | | 3,63 | 2,62 | 16,36 |
| 12611 | | OR | FKM | 80 | 2-106 | | 4,42 | 2,62 | 17,25 |
| 12612 | | OR | FKM | 80 | 2-107 | 3021 | 5,23 | 2,62 | 17,83 |
| 12613 | | OR | FKM | 80 | 2-108 | 3024 | 6,02 | 2,62 | 18,46 |
| 12614 | | OR | FKM | 80 | 2-109 | 3030 | 7,60 | 2,62 | 20,84 |
| 75469 | | OR | FKM | 80 | 2-110 | 109 | 9,13 | 2,62 | 22,63 |
| 12615 | | OR | FKM | 80 | 2-110 | 3037 111 | 9,19 | 2,62 | 22,63 |
| 12605 | | OR | FKM | 80 | 5-614 | 112 | 9,92 | 2,62 | 23,90 |
| 12616 | | OR | FKM | 80 | 2-111 | 3043 113 | 10,78 | 2,62 | 25,07 |
| 12606 | | OR | FKM | 80 | 5-615 | 115 | 11,91 | 2,62 | 25,64 |
| 12617 | 196551 | OR | FKM | 80 | 2-112 | 3050 116 | 12,37 | 2,62 | 26,28 |
| 12608 | | OR | FKM | 80 | 5-616 | 117 | 13,10 | 2,62 | 26,90 |
| 12618 | | OR | FKM | 80 | 2-113 | 3056 118 | 13,95 | 2,62 | 27,12 |
| 12609 | | OR | FKM | 80 | 5-243 | 119 | 15,08 | 2,62 | 27,43 |
| 12619 | | OR | FKM | 80 | 2-114 | 3062 120 | 15,54 | 2,62 | 27,91 |
| 12610 | | OR | FKM | 80 | 5-617 | 121 | 15,88 | 2,62 | 28,28 |
| 196453 | | OR | FKM | 80 | 2-115 | 3068 122 | 17,13 | 2,62 | 29,70 |
| 12684 | | OR | FKM | 80 | 5-256 | 123 | 17,86 | 2,62 | 30,91 |
| 12621 | | OR | FKM | 80 | 2-116 | 3075 124 | 18,72 | 2,62 | 31,65 |
| 12622 | 196672 | OR | FKM | 80 | 2-117 | 3081 127 | 20,29 | 2,62 | 32,65 |
| 12685 | 186386 | OR | FKM | 80 | | 128 | 20,63 | 2,62 | 34,30 |
| 12623 | | OR | FKM | 80 | 2-118 | 3087 | 21,89 | 2,62 | 36,72 |
| 12686 | | OR | FKM | 80 | | 130 | 22,22 | 2,62 | 37,20 |
| 12624 | | OR | FKM | 80 | 2-119 | 3093 | 23,47 | 2,62 | 38,36 |
| 12687 | | OR | FKM | 80 | | 132 | 23,81 | 2,62 | 38,83 |
| 12625 | | OR | FKM | 80 | 2-120 | 3100 | 25,07 | 2,62 | 39,57 |
| 12626 | 196552 | OR | FKM | 80 | 2-121 | 3106 | 26,64 | 2,62 | 41,21 |
| 12627 | | OR | FKM | 80 | 2-122 | 3112 | 28,25 | 2,62 | 43,47 |
| 12628 | | OR | FKM | 80 | 2-123 | 3118 | 29,82 | 2,62 | 45,27 |
| 12629 | | OR | FKM | 80 | 2-124 | 3125 | 31,42 | 2,62 | 47,79 |
| 12630 | | OR | FKM | 80 | 2-125 | 3131 | 33,00 | 2,62 | 50,49 |
| 12631 | 196553 | OR | FKM | 80 | 2-126 | 3137 | 34,59 | 2,62 | 53,44 |
| 12632 | | OR | FKM | 80 | 2-127 | 3143 | 36,17 | 2,62 | 55,93 |
| 12633 | | OR | FKM | 80 | 2-128 | 3150 | 37,77 | 2,62 | 58,29 |
| 12634 | | OR | FKM | 80 | 2-129 | 3156 | 39,34 | 2,62 | 60,56 |
| 12635 | 196299 | OR | FKM | 80 | 2-130 | 3162 | 40,95 | 2,62 | 62,73 |
| 12636 | | OR | FKM | 80 | 2-131 | 3168 | 42,52 | 2,62 | 65,21 |
| 12637 | 196300 | OR | FKM | 80 | 2-132 | 3175 | 44,12 | 2,62 | 67,47 |
| 12638 | | OR | FKM | 80 | 2-133 | 3181 | 45,69 | 2,62 | 69,74 |
| 12639 | 196371 | OR | FKM | 80 | 2-134 | 3187 | 47,29 | 2,62 | 72,02 |
| 12640 | | OR | FKM | 80 | 2-135 | 3193 | 48,90 | 2,62 | 74,44 |

| CODICE | NUOVO CODICE | TIPO | MAT. | SH | RIFERIMENTI USA | RIFERIMENTI UK | d1 mm | d2 mm | LISTINO 5-2016 X 100 € |
|---|---|---|---|---|---|---|---|---|---|
| 12641 | | OR | FKM | 80 | 2-136 | 3200 | 50,47 | 2,62 | 76,70 |
| 12642 | 197289 | OR | FKM | 80 | 2-137 | 3206 | 52,07 | 2,62 | 77,66 |
| 12643 | | OR | FKM | 80 | 2-138 | 3212 | 53,65 | 2,62 | 79,30 |
| 12644 | 196483 | OR | FKM | 80 | 2-139 | 3218 | 55,25 | 2,62 | 80,19 |
| 12645 | | OR | FKM | 80 | 2-140 | 3225 | 56,82 | 2,62 | 82,36 |
| 12646 | | OR | FKM | 80 | 2-141 | 3231 | 58,42 | 2,62 | 84,62 |
| 12647 | | OR | FKM | 80 | 2-142 | 3237 | 60,00 | 2,62 | 86,68 |
| 12648 | | OR | FKM | 80 | 2-143 | 3243 | 61,60 | 2,62 | 88,95 |
| 12649 | | OR | FKM | 80 | 2-144 | 3250 | 63,17 | 2,62 | 91,11 |
| 12650 | | OR | FKM | 80 | 2-145 | 3256 | 64,77 | 2,62 | 93,38 |
| 12651 | | OR | FKM | 80 | 2-146 | 3262 | 66,35 | 2,62 | 95,54 |
| 12652 | | OR | FKM | 80 | 2-147 | 3268 | 67,95 | 2,62 | 97,76 |
| 12653 | | OR | FKM | 80 | 2-148 | 3275 | 69,52 | 2,62 | 99,87 |
| 12654 | | OR | FKM | 80 | 2-149 | 3281 | 71,12 | 2,62 | 102,09 |
| 12655 | | OR | FKM | 80 | 2-150 | 3287 | 72,69 | 2,62 | 104,30 |
| 12656 | | OR | FKM | 80 | 2-151 | 3300 | 75,87 | 2,62 | 113,22 |
| 12657 | | OR | FKM | 80 | 2-152 | 3325 | 82,22 | 2,62 | 124,40 |
| 12658 | | OR | FKM | 80 | 2-153 | 3350 | 88,57 | 2,62 | 136,86 |
| 12659 | | OR | FKM | 80 | 2-154 | 3375 | 94,93 | 2,62 | 152,04 |
| 12660 | | OR | FKM | 80 | 2-155 | 3400 | 101,27 | 2,62 | 161,86 |
| 12661 | | OR | FKM | 80 | 2-156 | 3425 | 107,63 | 2,62 | 174,95 |
| 12662 | | OR | FKM | 80 | 2-157 | 3450 | 113,98 | 2,62 | 188,34 |
| 12663 | | OR | FKM | 80 | 2-158 | 3475 | 120,33 | 2,62 | 198,69 |
| 12664 | | OR | FKM | 80 | 2-159 | 3500 | 126,67 | 2,62 | 208,81 |
| 12665 | | OR | FKM | 80 | 2-160 | 3525 | 133,00 | 2,62 | 231,71 |
| 12666 | 196364 | OR | FKM | 80 | 2-161 | 3550 | 139,38 | 2,62 | 262,25 |
| 12667 | | OR | FKM | 80 | 2-162 | 3575 | 145,72 | 2,62 | 280,19 |
| 12668 | | OR | FKM | 80 | 2-163 | 3600 | 152,07 | 2,62 | 289,22 |
| 12669 | | OR | FKM | 80 | 2-164 | 3625 | 158,41 | 2,62 | 306,94 |
| 12670 | | OR | FKM | 80 | 2-165 | 3650 | 164,78 | 2,62 | 318,23 |
| 12671 | | OR | FKM | 80 | 2-166 | 3675 | 171,13 | 2,62 | 335,85 |
| 12672 | | OR | FKM | 80 | 2-167 | 3700 | 177,47 | 2,62 | 347,25 |
| 12673 | | OR | FKM | 80 | 2-168 | 3725 | 183,83 | 2,62 | 364,88 |
| 12674 | | OR | FKM | 80 | 2-169 | 3750 | 190,18 | 2,62 | 382,60 |
| 12675 | | OR | FKM | 80 | 2-170 | 3775 | 196,53 | 2,62 | 400,22 |
| 12676 | | OR | FKM | 80 | 2-171 | 3800 | 202,87 | 2,62 | 419,05 |
| 12677 | | OR | FKM | 80 | 2-172 | 3825 | 209,23 | 2,62 | 446,90 |
| 12678 | | OR | FKM | 80 | 2-173 | 3850 | 215,58 | 2,62 | 484,99 |
| 12679 | | OR | FKM | 80 | 2-174 | 3875 | 221,93 | 2,62 | 533,01 |
| 12680 | | OR | FKM | 80 | 2-175 | 3900 | 228,28 | 2,62 | 581,07 |
| 12681 | | OR | FKM | 80 | 2-176 | 3925 | 234,63 | 2,62 | 634,51 |
| 12682 | | OR | FKM | 80 | 2-177 | 3950 | 240,98 | 2,62 | 698,61 |
| 12683 | | OR | FKM | 80 | 2-178 | 3975 | 247,33 | 2,62 | 766,41 |
| 13682 | | OR | FKM | 80 | 2-201 | | 4,34 | 3,53 | 25,17 |
| 13683 | | OR | FKM | 80 | 2-202 | | 5,94 | 3,53 | 26,43 |
| 12695 | | OR | FKM | 80 | 2-203 | 4028 | 7,52 | 3,53 | 26,48 |
| 12696 | | OR | FKM | 80 | 2-204 | 4036 | 9,12 | 3,53 | 28,91 |
| 12697 | | OR | FKM | 80 | 2-205 | 4042 | 10,69 | 3,53 | 30,44 |
| 12698 | | OR | FKM | 80 | 2-206 | 4050 | 12,29 | 3,53 | 31,97 |

| CODICE | NUOVO CODICE | TIPO | MAT. | SH | RIFERIMENTI USA | RIFERIMENTI UK | d1 mm | d2 mm | LISTINO 5-2016 X 100 € |
|---|---|---|---|---|---|---|---|---|---|
| 12699 | | OR | FKM | 80 | 2-207 | 4055 | 13,87 | 3,53 | 33,29 |
| 12700 | | OR | FKM | 80 | 2-208 | 4061 | 15,47 | 3,53 | 35,88 |
| 13684 | | OR | FKM | 80 | 2-209 | 4067 | 17,04 | 3,53 | 37,72 |
| 12702 | | OR | FKM | 80 | 2-210 | 4075 125 | 18,64 | 3,53 | 40,62 |
| 12703 | | OR | FKM | 80 | 2-211 | 4081 126 | 20,22 | 3,53 | 42,84 |
| 12704 | | OR | FKM | 80 | 2-212 | 4087 129 | 21,82 | 3,53 | 49,75 |
| 12786 | | OR | FKM | 80 | 2-213 | 4093 131 | 23,40 | 3,53 | 52,44 |
| 12705 | | OR | FKM | 80 | 2-214 | 4100 133 | 24,99 | 3,53 | 54,72 |
| 194327 | | OR | FKM | 80 | 5-618 | 134 | 25,80 | 3,53 | 56,55 |
| 12706 | | OR | FKM | 80 | 2-215 | 4106 135 | 26,58 | 3,53 | 57,82 |
| 12707 | | OR | FKM | 80 | 2-216 | 4112 136 | 28,17 | 3,53 | 59,82 |
| 12708 | | OR | FKM | 80 | 2-217 | 4118 137 | 29,75 | 3,53 | 61,83 |
| 12709 | | OR | FKM | 80 | 2-218 | 4125 138 | 31,34 | 3,53 | 65,89 |
| 12710 | | OR | FKM | 80 | 2-219 | 4131 139 | 32,92 | 3,53 | 68,75 |
| 12711 | | OR | FKM | 80 | 2-220 | 4137 140 | 34,52 | 3,53 | 71,75 |
| 12712 | | OR | FKM | 80 | 2-221 | 4143 141 | 36,10 | 3,53 | 74,76 |
| 12713 | | OR | FKM | 80 | 2-222 | 4150 142 | 37,69 | 3,53 | 77,81 |
| 12693 | | OR | FKM | 80 | 5-321 | 144 | 39,69 | 3,53 | 81,57 |
| 12714 | | OR | FKM | 80 | 2-223 | 4162 | 40,87 | 3,53 | 83,83 |
| 12694 | | OR | FKM | 80 | 2-223 | 146 | 41,28 | 3,53 | 84,62 |
| 515196 | | OR | FKM | 80 | 5-332 | 147 | 42,86 | 3,53 | 87,58 |
| 12715 | | OR | FKM | 80 | 2-224 | 4175 | 44,04 | 3,53 | 89,74 |
| 13686 | | OR | FKM | 80 | | 149 | 44,45 | 3,53 | 90,48 |
| 13687 | | OR | FKM | 80 | 5-035 | 150 | 46,04 | 3,53 | 93,48 |
| 12716 | | OR | FKM | 80 | 2-225 | 4187 | 47,22 | 3,53 | 95,76 |
| 13688 | | OR | FKM | 80 | | 152 | 47,63 | 3,53 | 96,55 |
| 13689 | | OR | FKM | 80 | 5-701 | 153 | 49,21 | 3,53 | 99,50 |
| 12717 | | OR | FKM | 80 | 2-226 | 4200 | 50,40 | 3,53 | 101,67 |
| 13690 | | OR | FKM | 80 | | 155 | 50,80 | 3,53 | 104,77 |
| 12701 | | OR | FKM | 80 | 5-037 | 156 | 52,39 | 3,53 | 107,78 |
| 12718 | | OR | FKM | 80 | 2-227 | 4212 | 53,57 | 3,53 | 113,01 |
| 12772 | | OR | FKM | 80 | | 158 | 53,98 | 3,53 | 114,49 |
| 12773 | | OR | FKM | 80 | | 159 | 55,56 | 3,53 | 117,65 |
| 12719 | | OR | FKM | 80 | 2-228 | 4225 | 56,74 | 3,53 | 119,91 |
| 12774 | | OR | FKM | 80 | | 161 | 57,15 | 3,53 | 120,76 |
| 12775 | | OR | FKM | 80 | 5-702 | 162 | 58,74 | 3,53 | 123,92 |
| 12720 | 196389 | OR | FKM | 80 | 2-229 | 4237 | 59,92 | 3,53 | 126,30 |
| 12776 | | OR | FKM | 80 | | 164 | 60,33 | 3,53 | 127,04 |
| 12777 | | OR | FKM | 80 | 5-039 | 165 | 61,90 | 3,53 | 130,21 |
| 12721 | 196373 | OR | FKM | 80 | 2-230 | 4250 | 63,09 | 3,53 | 132,58 |
| 12778 | | OR | FKM | 80 | | 167 | 63,50 | 3,53 | 133,47 |
| 12779 | | OR | FKM | 80 | 5-703 | 168 | 65,10 | 3,53 | 136,59 |
| 12722 | | OR | FKM | 80 | 2-231 | 4262 | 66,27 | 3,53 | 138,97 |
| 12780 | | OR | FKM | 80 | | 170 | 66,67 | 3,53 | 141,23 |
| 12781 | | OR | FKM | 80 | 5-361 | 171 | 68,26 | 3,53 | 148,94 |
| 12723 | | OR | FKM | 80 | 2-232 | 4275 | 69,44 | 3,53 | 152,95 |
| 12782 | | OR | FKM | 80 | | 173 | 69,85 | 3,53 | 155,05 |
| 12783 | | OR | FKM | 80 | 5-704 | 174 | 71,44 | 3,53 | 158,96 |
| 12724 | | OR | FKM | 80 | 2-233 | 4287 | 72,62 | 3,53 | 162,06 |

| CODICE | NUOVO CODICE | TIPO | MAT. | SH | RIFERIMENTI USA | RIFERIMENTI UK | d1 mm | d2 mm | LISTINO 5-2016 X 100 € |
|---|---|---|---|---|---|---|---|---|---|
| 12784 | | OR | FKM | 80 | | 176 | 73,02 | 3,53 | 163,60 |
| 12785 | | OR | FKM | 80 | 5-705 | 177 | 74,60 | 3,53 | 166,24 |
| 12725 | | OR | FKM | 80 | 2-234 | 4300 | 75,80 | 3,53 | 168,77 |
| 12726 | | OR | FKM | 80 | 2-235 | 4312 | 78,97 | 3,53 | 172,78 |
| 12727 | | OR | FKM | 80 | 2-236 | 4325 | 82,14 | 3,53 | 179,58 |
| 12728 | | OR | FKM | 80 | 2-237 | 4337 | 85,32 | 3,53 | 186,24 |
| 12729 | | OR | FKM | 80 | 2-238 | 4350 | 88,50 | 3,53 | 192,88 |
| 12730 | | OR | FKM | 80 | 2-239 | 4362 | 91,67 | 3,53 | 199,53 |
| 12731 | | OR | FKM | 80 | 2-240 | 4375 | 94,84 | 3,53 | 206,18 |
| 12732 | | OR | FKM | 80 | 2-241 | 4387 | 98,02 | 3,53 | 212,72 |
| 12733 | | OR | FKM | 80 | 2-242 | 4400 | 101,20 | 3,53 | 219,36 |
| 12734 | | OR | FKM | 80 | 2-243 | 4412 | 104,37 | 3,53 | 226,06 |
| 12735 | | OR | FKM | 80 | 2-244 | 4425 | 107,54 | 3,53 | 232,72 |
| 12736 | | OR | FKM | 80 | 2-245 | 4437 | 110,72 | 3,53 | 239,36 |
| 12737 | | OR | FKM | 80 | 2-246 | 4450 | 113,90 | 3,53 | 246,06 |
| 12738 | | OR | FKM | 80 | 2-247 | 4462 | 117,07 | 3,53 | 252,71 |
| 12739 | | OR | FKM | 80 | 2-248 | 4475 | 120,25 | 3,53 | 259,40 |
| 12740 | | OR | FKM | 80 | 2-249 | 4487 | 123,42 | 3,53 | 266,00 |
| 12741 | | OR | FKM | 80 | 2-250 | 4500 | 126,60 | 3,53 | 278,03 |
| 12742 | | OR | FKM | 80 | 2-251 | 4512 | 129,77 | 3,53 | 300,66 |
| 12743 | | OR | FKM | 80 | 2-252 | 4525 | 132,94 | 3,53 | 306,57 |
| 12744 | | OR | FKM | 80 | 2-253 | 4537 | 136,12 | 3,53 | 313,48 |
| 12745 | | OR | FKM | 80 | 2-254 | 4550 | 139,30 | 3,53 | 326,77 |
| 12746 | | OR | FKM | 80 | 2-255 | 4562 | 142,47 | 3,53 | 329,10 |
| 12747 | | OR | FKM | 80 | 2-256 | 4575 | 145,65 | 3,53 | 347,04 |
| 12748 | | OR | FKM | 80 | 2-257 | 4587 | 148,82 | 3,53 | 375,42 |
| 12749 | | OR | FKM | 80 | 2-258 | 4600 | 151,99 | 3,53 | 398,16 |
| 12750 | | OR | FKM | 80 | 2-259 | 4625 | 158,35 | 3,53 | 412,87 |
| 12751 | | OR | FKM | 80 | 2-260 | 4650 | 164,70 | 3,53 | 430,66 |
| 12752 | | OR | FKM | 80 | 2-261 | 4675 | 171,05 | 3,53 | 433,83 |
| 12753 | | OR | FKM | 80 | 2-262 | 4700 | 177,40 | 3,53 | 448,07 |
| 12754 | 196937 | OR | FKM | 80 | 2-263 | 4725 | 183,75 | 3,53 | 469,27 |
| 13274 | | OR | FKM | 80 | 2-264 | 4750 | 190,10 | 3,53 | 483,95 |
| 12755 | | OR | FKM | 80 | 2-265 | 4775 | 196,44 | 3,53 | 506,99 |
| 12756 | | OR | FKM | 80 | 2-266 | 4800 | 202,79 | 3,53 | 527,58 |
| 12757 | | OR | FKM | 80 | 2-267 | 4825 | 209,14 | 3,53 | 548,84 |
| 12758 | | OR | FKM | 80 | 2-268 | 4850 | 215,49 | 3,53 | 570,25 |
| 12759 | | OR | FKM | 80 | 2-269 | 4875 | 221,84 | 3,53 | 592,15 |
| 12760 | | OR | FKM | 80 | 2-270 | 4900 | 228,19 | 3,53 | 614,25 |
| 12761 | | OR | FKM | 80 | 2-271 | 4925 | 234,54 | 3,53 | 636,26 |
| 12762 | | OR | FKM | 80 | 2-272 | 4950 | 240,89 | 3,53 | 659,00 |
| 12763 | | OR | FKM | 80 | 2-273 | 4975 | 247,24 | 3,53 | 681,94 |
| 12764 | | OR | FKM | 80 | 2-274 | 41000 | 253,59 | 3,53 | 711,17 |
| 12765 | | OR | FKM | 80 | 2-275 | 41050 | 266,30 | 3,53 | 786,66 |
| 12766 | | OR | FKM | 80 | 2-276 | 41100 | 279,00 | 3,53 | 830,35 |
| 12767 | | OR | FKM | 80 | 2-277 | 41150 | 291,70 | 3,53 | 904,62 |
| 12768 | | OR | FKM | 80 | 2-278 | 41200 | 304,39 | 3,53 | 930,85 |
| 12769 | | OR | FKM | 80 | 2-279 | 41300 | 329,80 | 3,53 | 1.016,79 |
| 12770 | | OR | FKM | 80 | 2-280 | 41400 | 355,20 | 3,53 | 1.115,71 |

| CODICE | NUOVO CODICE | TIPO | MAT. | SH | RIFERIMENTI USA | RIFERIMENTI UK | d1 mm | d2 mm | LISTINO 5-2016 X 100 € |
|---|---|---|---|---|---|---|---|---|---|
| 12771 | | OR | FKM | 80 | 2-281 | 41500 | 380,60 | 3,53 | 1.202,87 |
| 13726 | | OR | FKM | 80 | 2-282 | 41600 | 405,26 | 3,53 | 1.302,31 |
| 13730 | | OR | FKM | 80 | 2-283 | 41700 | 430,66 | 3,53 | 1.430,77 |
| 13736 | | OR | FKM | 80 | 2-284 | 41800 | 456,06 | 3,53 | 1.555,28 |
| 26632 | | OR | FKM | 80 | 2-309 | | 10,46 | 5,33 | 64,25 |
| 26635 | | OR | FKM | 80 | 2-310 | 6050 | 12,07 | 5,33 | 70,75 |
| 26639 | | OR | FKM | 80 | 2-311 | 6055 | 13,64 | 5,33 | 77,02 |
| 10226 | | OR | FKM | 80 | 2-312 | 6060 | 15,24 | 5,33 | 82,04 |
| 26644 | | OR | FKM | 80 | 2-313 | 6065 | 16,81 | 5,33 | 86,68 |
| 26648 | | OR | FKM | 80 | 2-314 | 6075 | 18,42 | 5,33 | 92,01 |
| 10279 | | OR | FKM | 80 | 2-315 | 6080 | 19,99 | 5,33 | 95,65 |
| 10307 | | OR | FKM | 80 | 2-316 | 6085 | 21,59 | 5,33 | 99,02 |
| 26660 | | OR | FKM | 80 | 2-317 | 6095 | 23,17 | 5,33 | 103,45 |
| 26665 | | OR | FKM | 80 | 2-318 | 6100 | 24,77 | 5,33 | 106,42 |
| 23798 | | OR | FKM | 80 | 2-319 | 6105 | 26,34 | 5,33 | 112,53 |
| 26670 | | OR | FKM | 80 | 2-320 | 6110 | 27,93 | 5,33 | 117,65 |
| 10428 | | OR | FKM | 80 | 2-321 | 6115 | 29,51 | 5,33 | 123,13 |
| 26679 | | OR | FKM | 80 | 2-322 | 6125 | 31,12 | 5,33 | 128,94 |
| 23799 | | OR | FKM | 80 | 2-323 | 6130 | 32,69 | 5,33 | 134,42 |
| 26684 | | OR | FKM | 80 | 2-324 | 6135 | 34,29 | 5,33 | 140,08 |
| 12807 | | OR | FKM | 80 | 2-325 | 6150 143 | 37,47 | 5,33 | 151,25 |
| 12808 | | OR | FKM | 80 | 2-326 | 6162 145 | 40,65 | 5,33 | 162,49 |
| 12809 | | OR | FKM | 80 | 2-327 | 6175 148 | 43,82 | 5,33 | 173,79 |
| 12810 | | OR | FKM | 80 | 2-328 | 6187 151 | 47,00 | 5,33 | 184,91 |
| 12811 | | OR | FKM | 80 | 2-329 | 6200 154 | 50,16 | 5,33 | 190,87 |
| 12812 | | OR | FKM | 80 | 2-330 | 6212 157 | 53,34 | 5,33 | 201,80 |
| 12813 | | OR | FKM | 80 | 2-331 | 6225 160 | 56,52 | 5,33 | 212,72 |
| 12814 | | OR | FKM | 80 | 2-332 | 6237 163 | 59,70 | 5,33 | 229,80 |
| 12815 | | OR | FKM | 80 | 2-333 | 6250 166 | 62,87 | 5,33 | 241,05 |
| 12816 | | OR | FKM | 80 | 2-334 | 6262 169 | 66,04 | 5,33 | 252,29 |
| 12817 | | OR | FKM | 80 | 2-335 | 6275 172 | 69,22 | 5,33 | 270,64 |
| 12818 | | OR | FKM | 80 | 2-336 | 6287 175 | 72,40 | 5,33 | 285,83 |
| 12787 | | OR | FKM | 80 | | 178 | 74,63 | 5,33 | 297,86 |
| 12819 | | OR | FKM | 80 | 2-337 | 6300 179 | 75,57 | 5,33 | 301,45 |
| 12820 | | OR | FKM | 80 | 2-338 | 6312 180 | 78,74 | 5,33 | 321,29 |
| 12788 | | OR | FKM | 80 | | 181 | 79,77 | 5,33 | 325,04 |
| 12821 | | OR | FKM | 80 | 2-339 | 6325 182 | 81,92 | 5,33 | 333,48 |
| 12822 | | OR | FKM | 80 | 2-340 | 6337 183 | 85,09 | 5,33 | 345,50 |
| 12823 | | OR | FKM | 80 | 2-341 | 6350 184 | 88,27 | 5,33 | 357,75 |
| 195554 | | OR | FKM | 80 | | 185 | 89,69 | 5,33 | 362,97 |
| 12824 | | OR | FKM | 80 | 3-342 | 6362 186 | 91,44 | 5,33 | 369,78 |
| 12825 | | OR | FKM | 80 | 2-343 | 6375 187 | 94,62 | 5,33 | 381,96 |
| 26733 | 196572 | OR | FKM | 80 | 2-344 | 6387 188 | 97,80 | 5,33 | 389,09 |
| 12790 | | OR | FKM | 80 | | 189 | 100,00 | 5,33 | 392,41 |
| 12827 | | OR | FKM | 80 | 2-345 | 6400 190 | 100,97 | 5,33 | 395,99 |
| 12828 | | OR | FKM | 80 | 2-346 | 6412 191 | 104,14 | 5,33 | 407,82 |
| 12829 | 196391 | OR | FKM | 80 | 2-347 | 6425 192 | 107,32 | 5,33 | 419,63 |
| 12791 | | OR | FKM | 80 | | 193 | 109,54 | 5,33 | 427,97 |
| 12830 | | OR | FKM | 80 | 2-348 | 6437 194 | 110,49 | 5,33 | 431,61 |

| CODICE | NUOVO CODICE | TIPO | MAT. | SH | RIFERIMENTI USA | RIFERIMENTI UK | d1 mm | d2 mm | LISTINO 5-2016 X 100 € |
|---|---|---|---|---|---|---|---|---|---|
| 12831 | | OR | FKM | 80 | 2-349 | 6450 195 | 113,67 | 5,33 | 443,43 |
| 12832 | | OR | FKM | 80 | 2-350 | 6460 | 116,84 | 5,33 | 450,54 |
| 194627 | | OR | FKM | 80 | | 199 | 117,48 | 5,33 | 455,24 |
| 12833 | | OR | FKM | 80 | 2-351 | 6473 | 120,02 | 5,33 | 463,85 |
| 12793 | | OR | FKM | 80 | | 201 | 120,70 | 5,33 | 467,00 |
| 12834 | | OR | FKM | 80 | 2-352 | 6485 | 123,20 | 5,33 | 474,29 |
| 12794 | | OR | FKM | 80 | | 203 | 123,80 | 5,33 | 478,93 |
| 12835 | | OR | FKM | 80 | 2-353 | 6500 | 126,37 | 5,33 | 487,79 |
| 12795 | | OR | FKM | 80 | | 206 | 127,00 | 5,33 | 490,75 |
| 12836 | | OR | FKM | 80 | 2-354 | 6510 | 129,54 | 5,33 | 520,71 |
| 194628 | | OR | FKM | 80 | | 208 | 130,18 | 5,33 | 528,05 |
| 12837 | | OR | FKM | 80 | 2-355 | 6523 | 132,72 | 5,33 | 537,81 |
| 12797 | | OR | FKM | 80 | | 210 | 133,35 | 5,33 | 540,60 |
| 12838 | | OR | FKM | 80 | 2-356 | 6535 | 135,90 | 5,33 | 550,78 |
| 12798 | | OR | FKM | 80 | | 213 | 136,53 | 5,33 | 553,15 |
| 12839 | | OR | FKM | 80 | 2-357 | 6550 | 139,07 | 5,33 | 562,92 |
| 12799 | | OR | FKM | 80 | | 215 | 139,70 | 5,33 | 565,55 |
| 12840 | | OR | FKM | 80 | 2-358 | 6560 | 142,24 | 5,33 | 575,58 |
| 12800 | | OR | FKM | 80 | | 217 | 142,88 | 5,33 | 578,00 |
| 12841 | | OR | FKM | 80 | 2-359 | 6573 | 145,42 | 5,33 | 586,14 |
| 12801 | | OR | FKM | 80 | | 219 | 146,05 | 5,33 | 590,45 |
| 12842 | | OR | FKM | 80 | 2-360 | 6585 | 148,60 | 5,33 | 600,06 |
| 12802 | | OR | FKM | 80 | | 221 | 149,23 | 5,33 | 602,65 |
| 12843 | 196440 | OR | FKM | 80 | 2-361 | 6600 | 151,77 | 5,33 | 627,82 |
| 12844 | | OR | FKM | 80 | 2-362 | 6625 | 158,12 | 5,33 | 659,00 |
| 195674 | | OR | FKM | 80 | | 6635 | 161,30 | 5,33 | 674,69 |
| 12845 | | OR | FKM | 80 | 2-363 | 6645 | 164,47 | 5,33 | 690,38 |
| 12846 | | OR | FKM | 80 | 2-364 | 6670 | 170,82 | 5,33 | 721,45 |
| 12847 | | OR | FKM | 80 | 2-365 | 6700 | 177,17 | 5,33 | 752,63 |
| 12848 | | OR | FKM | 80 | 2-366 | 6720 | 183,52 | 5,33 | 783,50 |
| 12849 | | OR | FKM | 80 | 2-367 | 6745 | 189,87 | 5,33 | 814,95 |
| 12850 | | OR | FKM | 80 | 2-368 | 6775 | 196,22 | 5,33 | 845,91 |
| 12851 | | OR | FKM | 80 | 2-369 | 6795 | 202,57 | 5,33 | 876,99 |
| 12852 | | OR | FKM | 80 | 2-370 | 6820 | 208,92 | 5,33 | 908,01 |
| 12853 | | OR | FKM | 80 | 2-371 | 6850 | 215,27 | 5,33 | 939,39 |
| 12854 | | OR | FKM | 80 | 2-372 | 6870 | 221,62 | 5,33 | 970,57 |
| 12855 | | OR | FKM | 80 | 2-373 | 6895 | 227,97 | 5,33 | 1.004,71 |
| 12856 | | OR | FKM | 80 | 2-374 | 6920 | 234,32 | 5,33 | 1.032,99 |
| 12857 | | OR | FKM | 80 | 2-375 | 6945 | 240,67 | 5,33 | 1.064,06 |
| 12858 | | OR | FKM | 80 | 2-376 | 6975 | 247,02 | 5,33 | 1.095,03 |
| 12859 | | OR | FKM | 80 | 2-377 | 6995 | 253,57 | 5,33 | 1.126,10 |
| 12860 | | OR | FKM | 80 | 2-378 | 61050 | 266,07 | 5,33 | 1.195,22 |
| 12861 | | OR | FKM | 80 | 2-379 | 61100 | 278,77 | 5,33 | 1.251,72 |
| 12862 | | OR | FKM | 80 | 2-380 | 61150 | 291,47 | 5,33 | 1.337,08 |
| 12863 | | OR | FKM | 80 | 2-381 | 61200 | 304,17 | 5,33 | 1.394,58 |
| 12864 | | OR | FKM | 80 | 2-382 | 61300 | 329,57 | 5,33 | 1.503,90 |
| 12865 | | OR | FKM | 80 | 2-383 | 61400 | 354,97 | 5,33 | 1.613,53 |
| 12866 | | OR | FKM | 80 | 2-384 | 61500 | 380,37 | 5,33 | 1.722,89 |
| 12867 | | OR | FKM | 80 | 2-385 | 61600 | 405,26 | 5,33 | 1.829,99 |

| CODICE | NUOVO CODICE | TIPO | MAT. | SH | RIFERIMENTI USA | RIFERIMENTI UK | d1 mm | d2 mm | LISTINO 5-2016 X 100 € |
|---|---|---|---|---|---|---|---|---|---|
| 13731 | | OR | FKM | 80 | 2-386 | 61700 | 430,66 | 5,33 | 2.012,46 |
| 13737 | | OR | FKM | 80 | 2-387 | 61800 | 456,06 | 5,33 | 2.191,01 |
| 13741 | | OR | FKM | 80 | 2-388 | 61900 | 481,46 | 5,33 | 2.266,27 |
| 11962 | | OR | FKM | 80 | 2-389 | 62000 | 506,81 | 5,33 | 2.551,13 |
| 65116 | | OR | FKM | 80 | 2-390 | 62100 | 532,20 | 5,33 | 2.674,04 |
| 12005 | | OR | FKM | 80 | 2-391 | 62200 | 557,61 | 5,33 | 2.797,02 |
| 65115 | | OR | FKM | 80 | 2-392 | 62300 | 582,68 | 5,33 | 2.905,75 |
| 68454 | | OR | FKM | 80 | 2-393 | 62400 | 608,08 | 5,33 | 3.276,82 |
| 36566 | | OR | FKM | 80 | 2-394 | 62500 | 633,48 | 5,33 | 3.324,36 |
| 39240 | | OR | FKM | 80 | 2-395 | 62600 | 658,88 | 5,33 | 3.512,40 |
| 12884 | | OR | FKM | 80 | 2-425 | 8450 196 | 113,67 | 6,99 | 743,35 |
| 12868 | | OR | FKM | 80 | | 197 | 114,70 | 6,99 | 749,58 |
| 12885 | | OR | FKM | 80 | 2-426 | 8462 198 | 116,84 | 6,99 | 762,87 |
| 12886 | | OR | FKM | 80 | 2-427 | 8475 200 | 120,02 | 6,99 | 782,65 |
| 12887 | | OR | FKM | 80 | 2-428 | 8487 202 | 123,20 | 6,99 | 801,96 |
| 12869 | | OR | FKM | 80 | | 204 | 124,60 | 6,99 | 810,62 |
| 12888 | | OR | FKM | 80 | 2-429 | 8500 205 | 126,37 | 6,99 | 821,64 |
| 12889 | | OR | FKM | 80 | 2-430 | 8512 207 | 129,54 | 6,99 | 874,82 |
| 12890 | | OR | FKM | 80 | 2-431 | 8525 209 | 132,72 | 6,99 | 895,29 |
| 12870 | | OR | FKM | 80 | | 211 | 134,50 | 6,99 | 906,47 |
| 12891 | | OR | FKM | 80 | 2-432 | 8537 212 | 135,90 | 6,99 | 915,44 |
| 12892 | | OR | FKM | 80 | 2-433 | 8550 214 | 139,07 | 6,99 | 935,92 |
| 12893 | | OR | FKM | 80 | 2-434 | 8562 216 | 142,24 | 6,99 | 956,39 |
| 12894 | | OR | FKM | 80 | 2-435 | 8575 218 | 145,42 | 6,99 | 977,06 |
| 12895 | | OR | FKM | 80 | 2-436 | 8587 220 | 148,60 | 6,99 | 996,90 |
| 12896 | | OR | FKM | 80 | 2-437 | 8600 222 | 151,77 | 6,99 | 1.017,27 |
| 12871 | | OR | FKM | 80 | | 223 | 155,60 | 6,99 | 1.041,75 |
| 12897 | | OR | FKM | 80 | 2-438 | 8625 224 | 158,12 | 6,99 | 1.057,89 |
| 12872 | | OR | FKM | 80 | | 225 | 159,50 | 6,99 | 1.066,97 |
| 12873 | | OR | FKM | 80 | | 226 | 161,90 | 6,99 | 1.082,00 |
| 12898 | | OR | FKM | 80 | 2-439 | 8650 227 | 164,47 | 6,99 | 1.098,46 |
| 12874 | | OR | FKM | 80 | | 228 | 166,70 | 6,99 | 1.112,76 |
| 12875 | | OR | FKM | 80 | | 229 | 168,30 | 6,99 | 1.123,20 |
| 12899 | | OR | FKM | 80 | 2-440 | 8675 230 | 170,82 | 6,99 | 1.139,39 |
| 12876 | | OR | FKM | 80 | | 231 | 174,60 | 6,99 | 1.163,35 |
| 12900 | | OR | FKM | 80 | 2-441 | 8700 232 | 177,17 | 6,99 | 1.180,03 |
| 12877 | | OR | FKM | 80 | | 233 | 181,00 | 6,99 | 1.204,40 |
| 12901 | | OR | FKM | 80 | 2-442 | 8725 234 | 183,52 | 6,99 | 1.225,82 |
| 12878 | | OR | FKM | 80 | | 235 | 187,30 | 6,99 | 1.244,92 |
| 12902 | | OR | FKM | 80 | 2-443 | 8750 236 | 189,87 | 6,99 | 1.261,38 |
| 12879 | | OR | FKM | 80 | | 237 | 193,70 | 6,99 | 1.285,96 |
| 12903 | | OR | FKM | 80 | 2-444 | 8775 238 | 196,22 | 6,99 | 1.302,00 |
| 12880 | | OR | FKM | 80 | | 239 | 199,80 | 6,99 | 1.326,37 |
| 12904 | | OR | FKM | 80 | 2-445 | 8800 240 | 202,57 | 6,99 | 1.402,05 |
| 12881 | | OR | FKM | 80 | | 8825 241 | 208,92 | 6,99 | 1.419,78 |
| 12905 | | OR | FKM | 80 | 2-446 | 8850 242 | 215,27 | 6,99 | 1.437,50 |
| 12882 | | OR | FKM | 80 | | 8875 243 | 221,62 | 6,99 | 1.474,90 |
| 12906 | | OR | FKM | 80 | 2-447 | 8900 244 | 227,97 | 6,99 | 1.519,71 |
| 12883 | | OR | FKM | 80 | | 8925 245 | 234,32 | 6,99 | 1.560,87 |

| CODICE | NUOVO CODICE | TIPO | MAT. | SH | RIFERIMENTI USA | RIFERIMENTI UK | | d1 mm | d2 mm | LISTINO 5-2016 X 100 € |
|---|---|---|---|---|---|---|---|---|---|---|
| 12907 | | OR | FKM | 80 | 2-448 | 8950 | 246 | 240,67 | 6,99 | 1.601,91 |
| 13661 | | OR | FKM | 80 | | 8975 | 247 | 247,00 | 6,99 | 1.643,07 |
| 12908 | | OR | FKM | 80 | 2-449 | 81000 | 248 | 253,57 | 6,99 | 1.684,12 |
| 13662 | | OR | FKM | 80 | | 81025 | 249 | 259,70 | 6,99 | 1.171,16 |
| 12909 | | OR | FKM | 80 | 2-450 | 81050 | 250 | 266,07 | 6,99 | 1.766,28 |
| 194126 | | OR | FKM | 80 | | 81075 | 251 | 272,40 | 6,99 | 1.807,27 |
| 12910 | | OR | FKM | 80 | 2-451 | 81100 | 252 | 278,77 | 6,99 | 1.848,48 |
| 13666 | | OR | FKM | 80 | | 81125 | 253 | 285,10 | 6,99 | 1.889,52 |
| 12911 | | OR | FKM | 80 | 2-452 | 81150 | 254 | 291,47 | 6,99 | 1.930,69 |
| 13668 | | OR | FKM | 80 | | 81175 | 255 | 297,80 | 6,99 | 1.971,63 |
| 12912 | | OR | FKM | 80 | 2-453 | 81200 | 256 | 304,17 | 6,99 | 2.012,67 |
| 12913 | | OR | FKM | 80 | 2-454 | 81250 | 257 | 316,87 | 6,99 | 2.094,82 |
| 12914 | | OR | FKM | 80 | 2-455 | 81300 | 258 | 329,57 | 6,99 | 2.177,03 |
| 12915 | | OR | FKM | 80 | 2-456 | 81350 | 259 | 342,27 | 6,99 | 2.259,24 |
| 12916 | | OR | FKM | 80 | 2-457 | 81400 | 260 | 354,97 | 6,99 | 2.341,45 |
| 12917 | | OR | FKM | 80 | 2-458 | 81450 | 261 | 367,67 | 6,99 | 2.423,59 |
| 12918 | | OR | FKM | 80 | 2-459 | 81500 | 262 | 380,37 | 6,99 | 2.505,80 |
| 12919 | | OR | FKM | 80 | 2-460 | 81550 | 263 | 393,07 | 6,99 | 2.587,89 |
| 13727 | | OR | FKM | 80 | 2-461 | 81600 | | 405,26 | 6,99 | 2.699,68 |
| 13728 | | OR | FKM | 80 | 2-462 | 81650 | | 417,96 | 6,99 | 2.814,79 |
| 13732 | | OR | FKM | 80 | 2-463 | 81700 | | 430,66 | 6,99 | 2.929,96 |
| 13734 | | OR | FKM | 80 | 2-464 | 81750 | | 443,36 | 6,99 | 3.045,07 |
| 13738 | | OR | FKM | 80 | 2-465 | 81800 | | 456,06 | 6,99 | 3.160,24 |
| 13681 | | OR | FKM | 80 | 2-466 | 81850 | | 468,76 | 6,99 | 3.275,57 |
| 13742 | 196607 | OR | FKM | 80 | 2-467 | 81900 | | 481,46 | 6,99 | 3.377,39 |
| 13743 | | OR | FKM | 80 | 2-468 | 81950 | | 494,16 | 6,99 | 3.505,74 |
| 11963 | | OR | FKM | 80 | 2-469 | 82000 | | 506,86 | 6,99 | 3.620,74 |
| 11986 | | OR | FKM | 80 | 2-470 | 82100 | | 532,26 | 6,99 | 3.818,11 |
| 12006 | | OR | FKM | 80 | 2-471 | 82200 | | 557,66 | 6,99 | 4.015,48 |
| 12021 | | OR | FKM | 80 | 2-472 | 82300 | | 582,68 | 6,99 | 4.210,14 |
| 41511 | | OR | FKM | 80 | 2-473 | 82400 | | 608,08 | 6,99 | 4.406,12 |
| 21141 | | OR | FKM | 80 | 2-474 | 82500 | | 633,48 | 6,99 | 4.604,77 |
| 21142 | | OR | FKM | 80 | 2-475 | 82600 | | 658,88 | 6,99 | 4.802,09 |
| | | | | METRIC STANDARD | | | | | | |
| 24878 | | OR | FKM | 80 | | | | 1,15 | 1,00 | 8,43 |
| 12207 | | OR | FKM | 80 | | | | 1,50 | 1,00 | 8,89 |
| 12208 | | OR | FKM | 80 | | | | 1,80 | 1,00 | 8,89 |
| 13108 | | OR | FKM | 80 | | | | 2,00 | 1,00 | 8,30 |
| 12211 | | OR | FKM | 80 | | | | 2,50 | 1,00 | 9,79 |
| 13111 | | OR | FKM | 80 | | | | 3,00 | 1,00 | 9,50 |
| 13115 | | OR | FKM | 80 | | | | 3,50 | 1,00 | 11,17 |
| 13117 | | OR | FKM | 80 | | | | 4,00 | 1,00 | 10,07 |
| 23859 | | OR | FKM | 80 | | | | 4,50 | 1,00 | 12,00 |
| 13126 | | OR | FKM | 80 | | | | 5,00 | 1,00 | 10,61 |
| 23864 | | OR | FKM | 80 | | | | 5,50 | 1,00 | 13,06 |
| 13134 | | OR | FKM | 80 | | | | 6,00 | 1,00 | 12,00 |
| 24964 | | OR | FKM | 80 | | | | 6,50 | 1,00 | 15,46 |
| 12228 | | OR | FKM | 80 | | | | 7,00 | 1,00 | 16,52 |
| 66511 | | OR | FKM | 80 | | | | 7,50 | 1,00 | 17,06 |

| CODICE | NUOVO CODICE | TIPO | MAT. | SH | RIFERIMENTI USA | RIFERIMENTI UK | d1 mm | d2 mm | LISTINO 5-2016 X 100 € |
|---|---|---|---|---|---|---|---|---|---|
| 13147 | | OR | FKM | 80 | | | 8,00 | 1,00 | 15,03 |
| 12234 | | OR | FKM | 80 | | | 8,50 | 1,00 | 17,60 |
| 12235 | | OR | FKM | 80 | | | 9,00 | 1,00 | 15,46 |
| 25007 | | OR | FKM | 80 | | | 9,50 | 1,00 | 18,66 |
| 12241 | | OR | FKM | 80 | | | 10,00 | 1,00 | 16,84 |
| 25015 | | OR | FKM | 80 | | | 10,50 | 1,00 | 20,26 |
| 12247 | | OR | FKM | 80 | | | 11,00 | 1,00 | 18,48 |
| 25025 | | OR | FKM | 80 | | | 11,50 | 1,00 | 21,86 |
| 12255 | | OR | FKM | 80 | | | 12,00 | 1,00 | 19,61 |
| 25035 | | OR | FKM | 80 | | | 12,50 | 1,00 | 23,69 |
| 12261 | | OR | FKM | 80 | | | 13,00 | 1,00 | 21,48 |
| 66512 | | OR | FKM | 80 | | | 13,50 | 1,00 | 25,86 |
| 12266 | | OR | FKM | 80 | | | 14,00 | 1,00 | 23,33 |
| 25053 | | OR | FKM | 80 | | | 14,50 | 1,00 | 27,35 |
| 25061 | | OR | FKM | 80 | | | 15,00 | 1,00 | 24,15 |
| 66513 | | OR | FKM | 80 | | | 15,50 | 1,00 | 28,23 |
| 12275 | | OR | FKM | 80 | | | 16,00 | 1,00 | 28,85 |
| 66514 | | OR | FKM | 80 | | | 16,50 | 1,00 | 29,42 |
| 12279 | | OR | FKM | 80 | | | 17,00 | 1,00 | 30,02 |
| 66515 | | OR | FKM | 80 | | | 17,50 | 1,00 | 30,70 |
| 12284 | | OR | FKM | 80 | | | 18,00 | 1,00 | 31,90 |
| 10265 | | OR | FKM | 80 | | | 18,50 | 1,00 | 32,09 |
| 23899 | | OR | FKM | 80 | | | 19,00 | 1,00 | 32,59 |
| 12293 | | OR | FKM | 80 | | | 19,50 | 1,00 | 33,16 |
| 12294 | | OR | FKM | 80 | | | 20,00 | 1,00 | 33,66 |
| 66516 | | OR | FKM | 80 | | | 20,50 | 1,00 | 34,20 |
| 10296 | | OR | FKM | 80 | | | 21,00 | 1,00 | 34,68 |
| 10304 | | OR | FKM | 80 | | | 21,50 | 1,00 | 35,28 |
| 35190 | | OR | FKM | 80 | | | 22,00 | 1,00 | 35,28 |
| 25112 | | OR | FKM | 80 | | | 22,50 | 1,00 | 36,00 |
| 10327 | | OR | FKM | 80 | | | 23,00 | 1,00 | 36,00 |
| 25121 | | OR | FKM | 80 | | | 23,50 | 1,00 | 36,15 |
| 10344 | | OR | FKM | 80 | | | 24,00 | 1,00 | 36,15 |
| 66517 | | OR | FKM | 80 | | | 24,50 | 1,00 | 36,43 |
| 66518 | | OR | FKM | 80 | | | 25,00 | 1,00 | 36,43 |
| 24873 | | OR | FKM | 80 | | | 0,74 | 1,02 | 8,12 |
| 13751 | | OR | FKM | 80 | | | 1,78 | 1,02 | 8,12 |
| 12537 | | OR | FKM | 80 | | | 1,07 | 1,27 | 8,12 |
| 24939 | | OR | FKM | 80 | | | 4,70 | 1,42 | 20,44 |
| 24891 | | OR | FKM | 80 | | | 1,85 | 1,50 | 9,68 |
| 12209 | | OR | FKM | 80 | | | 2,00 | 1,50 | 8,89 |
| 24901 | | OR | FKM | 80 | | | 2,50 | 1,50 | 10,65 |
| 24910 | | OR | FKM | 80 | | | 2,80 | 1,50 | 10,65 |
| 13112 | | OR | FKM | 80 | | | 3,00 | 1,50 | 10,33 |
| 12218 | | OR | FKM | 80 | | | 3,50 | 1,50 | 12,44 |
| 13119 | | OR | FKM | 80 | | | 4,00 | 1,50 | 11,05 |
| 13123 | | OR | FKM | 80 | | | 4,50 | 1,50 | 11,54 |
| 13128 | | OR | FKM | 80 | | | 5,00 | 1,50 | 11,82 |
| 13132 | | OR | FKM | 80 | | | 5,50 | 1,50 | 14,49 |

| CODICE | NUOVO CODICE | TIPO | MAT. | SH | RIFERIMENTI USA | RIFERIMENTI UK | d1 mm | d2 mm | LISTINO 5-2016 X 100 € |
|---|---|---|---|---|---|---|---|---|---|
| 13135 | | OR | FKM | 80 | | | 6,00 | 1,50 | 13,34 |
| 12226 | | OR | FKM | 80 | | | 6,50 | 1,50 | 17,16 |
| 13141 | | OR | FKM | 80 | | | 7,00 | 1,50 | 15,92 |
| 13145 | | OR | FKM | 80 | | | 7,50 | 1,50 | 18,95 |
| 13149 | | OR | FKM | 80 | | | 8,00 | 1,50 | 16,70 |
| 13156 | | OR | FKM | 80 | | | 8,50 | 1,50 | 19,84 |
| 13160 | | OR | FKM | 80 | | | 9,00 | 1,50 | 17,20 |
| 12238 | | OR | FKM | 80 | | | 9,50 | 1,50 | 20,72 |
| 13169 | | OR | FKM | 80 | | | 10,00 | 1,50 | 18,73 |
| 13175 | | OR | FKM | 80 | | | 10,50 | 1,50 | 22,50 |
| 13177 | | OR | FKM | 80 | | | 11,00 | 1,50 | 20,52 |
| 13180 | | OR | FKM | 80 | | | 11,50 | 1,50 | 24,29 |
| 13182 | | OR | FKM | 80 | | | 12,00 | 1,50 | 21,84 |
| 25036 | | OR | FKM | 80 | | | 12,50 | 1,50 | 26,36 |
| 13189 | | OR | FKM | 80 | | | 13,00 | 1,50 | 23,85 |
| 26637 | | OR | FKM | 80 | | | 13,50 | 1,50 | 28,74 |
| 13196 | | OR | FKM | 80 | | | 14,00 | 1,50 | 25,92 |
| 10217 | | OR | FKM | 80 | | | 14,50 | 1,50 | 30,38 |
| 13201 | | OR | FKM | 80 | | | 15,00 | 1,50 | 26,74 |
| 13702 | | OR | FKM | 80 | | | 15,50 | 1,50 | 31,37 |
| 13208 | | OR | FKM | 80 | | | 16,00 | 1,50 | 27,77 |
| 12278 | | OR | FKM | 80 | | | 16,50 | 1,50 | 32,69 |
| 13216 | | OR | FKM | 80 | | | 17,00 | 1,50 | 28,88 |
| 10247 | | OR | FKM | 80 | | | 17,50 | 1,50 | 34,12 |
| 13221 | | OR | FKM | 80 | | | 18,00 | 1,50 | 35,46 |
| 23898 | | OR | FKM | 80 | | | 18,50 | 1,50 | 35,64 |
| 13228 | | OR | FKM | 80 | | | 19,00 | 1,50 | 31,41 |
| 25094 | | OR | FKM | 80 | | | 19,50 | 1,50 | 36,77 |
| 13235 | | OR | FKM | 80 | | | 20,00 | 1,50 | 32,37 |
| 66519 | | OR | FKM | 80 | | | 20,50 | 1,50 | 37,96 |
| 13242 | | OR | FKM | 80 | | | 21,00 | 1,50 | 38,56 |
| 65611 | | OR | FKM | 80 | | | 21,50 | 1,50 | 38,56 |
| 13247 | | OR | FKM | 80 | | | 22,00 | 1,50 | 33,97 |
| 26659 | | OR | FKM | 80 | | | 22,50 | 1,50 | 38,56 |
| 13253 | | OR | FKM | 80 | | | 23,00 | 1,50 | 39,85 |
| 66520 | | OR | FKM | 80 | | | 23,50 | 1,50 | 39,85 |
| 13257 | | OR | FKM | 80 | | | 24,00 | 1,50 | 40,16 |
| 66521 | | OR | FKM | 80 | | | 24,50 | 1,50 | 40,16 |
| 13263 | | OR | FKM | 80 | | | 25,00 | 1,50 | 34,90 |
| 25136 | | OR | FKM | 80 | | | 25,50 | 1,50 | 40,27 |
| 13269 | | OR | FKM | 80 | | | 26,00 | 1,50 | 40,91 |
| 66522 | | OR | FKM | 80 | | | 26,50 | 1,50 | 40,91 |
| 13276 | | OR | FKM | 80 | | | 27,00 | 1,50 | 48,25 |
| 10400 | | OR | FKM | 80 | | | 27,50 | 1,50 | 48,25 |
| 13281 | | OR | FKM | 80 | | | 28,00 | 1,50 | 49,75 |
| 66523 | | OR | FKM | 80 | | | 28,50 | 1,50 | 49,75 |
| 13674 | | OR | FKM | 80 | | | 29,00 | 1,50 | 52,52 |
| 12323 | | OR | FKM | 80 | | | 29,50 | 1,50 | 52,52 |
| 12324 | | OR | FKM | 80 | | | 30,00 | 1,50 | 52,77 |

| CODICE | NUOVO CODICE | TIPO | MAT. | SH | RIFERIMENTI USA | RIFERIMENTI UK | d1 mm | d2 mm | LISTINO 5-2016 X 100 € |
|---|---|---|---|---|---|---|---|---|---|
| 66524 | | OR | FKM | 80 | | | 30,50 | 1,50 | 52,77 |
| 13298 | | OR | FKM | 80 | | | 31,00 | 1,50 | 53,03 |
| 10452 | | OR | FKM | 80 | | | 31,50 | 1,50 | 53,03 |
| 13304 | | OR | FKM | 80 | | | 32,00 | 1,50 | 53,89 |
| 66525 | | OR | FKM | 80 | | | 32,50 | 1,50 | 53,89 |
| 10470 | | OR | FKM | 80 | | | 33,00 | 1,50 | 54,77 |
| 66526 | | OR | FKM | 80 | | | 33,50 | 1,50 | 54,77 |
| 12081 | | OR | FKM | 80 | | | 34,00 | 1,50 | 57,09 |
| 66527 | | OR | FKM | 80 | | | 34,50 | 1,50 | 57,09 |
| 13317 | | OR | FKM | 80 | | | 35,00 | 1,50 | 57,33 |
| 66528 | | OR | FKM | 80 | | | 35,50 | 1,50 | 57,33 |
| 13323 | | OR | FKM | 80 | | | 36,00 | 1,50 | 57,51 |
| 66529 | | OR | FKM | 80 | | | 36,50 | 1,50 | 57,51 |
| 13329 | | OR | FKM | 80 | | | 37,00 | 1,50 | 58,11 |
| 66530 | | OR | FKM | 80 | | | 37,50 | 1,50 | 58,11 |
| 10533 | | OR | FKM | 80 | | | 38,00 | 1,50 | 65,13 |
| 66531 | | OR | FKM | 80 | | | 38,50 | 1,50 | 65,13 |
| 10546 | | OR | FKM | 80 | | | 39,00 | 1,50 | 69,66 |
| 10558 | | OR | FKM | 80 | | | 39,50 | 1,50 | 69,66 |
| 13344 | | OR | FKM | 80 | | | 40,00 | 1,50 | 69,91 |
| 13965 | | OR | FKM | 80 | | | 41,00 | 1,50 | 65,45 |
| 13354 | | OR | FKM | 80 | | | 42,00 | 1,50 | 70,93 |
| 25232 | | OR | FKM | 80 | | | 43,00 | 1,50 | 71,75 |
| 66532 | | OR | FKM | 80 | | | 44,00 | 1,50 | 72,58 |
| 13371 | | OR | FKM | 80 | | | 45,00 | 1,50 | 65,28 |
| 23932 | | OR | FKM | 80 | | | 46,00 | 1,50 | 78,06 |
| 13379 | | OR | FKM | 80 | | | 47,00 | 1,50 | 80,73 |
| 25432 | | OR | FKM | 80 | | | 48,00 | 1,50 | 83,51 |
| 12364 | | OR | FKM | 80 | | | 49,00 | 1,50 | 86,28 |
| 10671 | | OR | FKM | 80 | | | 50,00 | 1,50 | 89,27 |
| 23803 | | OR | FKM | 80 | | | 51,00 | 1,50 | 90,00 |
| 23940 | | OR | FKM | 80 | | | 52,00 | 1,50 | 90,92 |
| 13401 | | OR | FKM | 80 | | | 53,00 | 1,50 | 91,77 |
| 66533 | | OR | FKM | 80 | | | 54,00 | 1,50 | 92,87 |
| 13406 | | OR | FKM | 80 | | | 55,00 | 1,50 | 94,08 |
| 66534 | | OR | FKM | 80 | | | 56,00 | 1,50 | 95,26 |
| 13415 | | OR | FKM | 80 | | | 57,00 | 1,50 | 97,50 |
| 66535 | | OR | FKM | 80 | | | 58,00 | 1,50 | 99,70 |
| 75488 | | OR | FKM | 80 | | | 59,00 | 1,50 | 101,95 |
| 12376 | | OR | FKM | 80 | | | 60,00 | 1,50 | 104,16 |
| 25283 | | OR | FKM | 80 | | | 61,00 | 1,50 | 105,45 |
| 23947 | | OR | FKM | 80 | | | 62,00 | 1,50 | 106,76 |
| 10830 | | OR | FKM | 80 | | | 63,00 | 1,50 | 106,76 |
| 13780 | | OR | FKM | 80 | | | 64,00 | 1,50 | 107,98 |
| 13437 | | OR | FKM | 80 | | | 65,00 | 1,50 | 109,71 |
| 66536 | | OR | FKM | 80 | | | 66,00 | 1,50 | 110,54 |
| 10871 | | OR | FKM | 80 | | | 67,00 | 1,50 | 112,21 |
| 23806 | | OR | FKM | 80 | | | 68,00 | 1,50 | 113,89 |
| 10885 | | OR | FKM | 80 | | | 69,00 | 1,50 | 115,44 |

| CODICE | NUOVO CODICE | TIPO | MAT. | SH | RIFERIMENTI USA | RIFERIMENTI UK | d1 mm | d2 mm | LISTINO 5-2016 X 100 € |
|---|---|---|---|---|---|---|---|---|---|
| 66537 | | OR | FKM | 80 | | | 70,00 | 1,50 | 117,22 |
| 13781 | | OR | FKM | 80 | | | 71,00 | 1,50 | 119,08 |
| 10914 | | OR | FKM | 80 | | | 72,00 | 1,50 | 120,83 |
| 66538 | | OR | FKM | 80 | | | 73,00 | 1,50 | 127,96 |
| 10926 | | OR | FKM | 80 | | | 74,00 | 1,50 | 135,01 |
| 66539 | | OR | FKM | 80 | | | 75,00 | 1,50 | 142,77 |
| 10944 | | OR | FKM | 80 | | | 76,00 | 1,50 | 147,50 |
| 66540 | | OR | FKM | 80 | | | 77,00 | 1,50 | 152,13 |
| 10963 | | OR | FKM | 80 | | | 78,00 | 1,50 | 156,65 |
| 66541 | | OR | FKM | 80 | | | 79,00 | 1,50 | 161,21 |
| 10977 | | OR | FKM | 80 | | | 80,00 | 1,50 | 163,42 |
| 66542 | | OR | FKM | 80 | | | 81,00 | 1,50 | 165,61 |
| 65750 | | OR | FKM | 80 | | | 82,00 | 1,50 | 167,86 |
| 66543 | | OR | FKM | 80 | | | 83,00 | 1,50 | 171,18 |
| 66544 | | OR | FKM | 80 | | | 84,00 | 1,50 | 174,71 |
| 13782 | | OR | FKM | 80 | | | 85,00 | 1,50 | 178,05 |
| 66545 | | OR | FKM | 80 | | | 86,00 | 1,50 | 179,44 |
| 66546 | | OR | FKM | 80 | | | 87,00 | 1,50 | 181,18 |
| 11050 | | OR | FKM | 80 | | | 88,00 | 1,50 | 183,21 |
| 66547 | | OR | FKM | 80 | | | 89,00 | 1,50 | 187,13 |
| 66548 | | OR | FKM | 80 | | | 90,00 | 1,50 | 191,29 |
| 66549 | | OR | FKM | 80 | | | 91,00 | 1,50 | 195,53 |
| 11085 | | OR | FKM | 80 | | | 92,00 | 1,50 | 196,63 |
| 66550 | | OR | FKM | 80 | | | 93,00 | 1,50 | 197,78 |
| 11103 | | OR | FKM | 80 | | | 94,00 | 1,50 | 199,41 |
| 13783 | | OR | FKM | 80 | | | 95,00 | 1,50 | 201,38 |
| 66551 | | OR | FKM | 80 | | | 96,00 | 1,50 | 203,69 |
| 66552 | | OR | FKM | 80 | | | 97,00 | 1,50 | 206,11 |
| 25345 | | OR | FKM | 80 | | | 98,00 | 1,50 | 208,51 |
| 66553 | | OR | FKM | 80 | | | 99,00 | 1,50 | 210,28 |
| 11147 | | OR | FKM | 80 | | | 100,00 | 1,50 | 212,02 |
| | | BRITISH STANDARD METRIC BS 4518 - SWEDISH STANDARD SMS 1586 | | | | | | | |
| 49512 | | OR | FKM | 80 | | | 2,75 | 1,60 | 11,86 |
| 12920 | | OR | FKM | 80 | | | 3,10 | 1,60 | 10,79 |
| 12921 | | OR | FKM | 80 | | | 4,10 | 1,60 | 11,82 |
| 66468 | | OR | FKM | 80 | | | 4,70 | 1,60 | 13,60 |
| 25360 | | OR | FKM | 80 | | | 5,00 | 1,60 | 14,21 |
| 12922 | | OR | FKM | 80 | | | 5,10 | 1,60 | 12,32 |
| 12923 | | OR | FKM | 80 | | | 6,10 | 1,60 | 14,38 |
| 12924 | | OR | FKM | 80 | | | 7,10 | 1,60 | 16,17 |
| 12925 | | OR | FKM | 80 | | | 8,10 | 1,60 | 16,70 |
| 12926 | | OR | FKM | 80 | | | 9,10 | 1,60 | 17,24 |
| 12927 | | OR | FKM | 80 | | | 10,10 | 1,60 | 18,97 |
| 12928 | | OR | FKM | 80 | | | 11,10 | 1,60 | 20,65 |
| 12929 | | OR | FKM | 80 | | | 12,10 | 1,60 | 21,84 |
| 12930 | | OR | FKM | 80 | | | 13,10 | 1,60 | 24,15 |
| 12931 | | OR | FKM | 80 | | | 14,10 | 1,60 | 25,92 |
| 12932 | 196562 | OR | FKM | 80 | | | 15,10 | 1,60 | 28,23 |
| 12933 | | OR | FKM | 80 | | | 16,10 | 1,60 | 29,27 |

| CODICE | NUOVO CODICE | TIPO | MAT. | SH | RIFERIMENTI USA | RIFERIMENTI UK | d1 mm | d2 mm | LISTINO 5-2016 X 100 € |
|---|---|---|---|---|---|---|---|---|---|
| 12934 | | OR | FKM | 80 | | | 17,10 | 1,60 | 30,28 |
| 12935 | | OR | FKM | 80 | | | 18,10 | 1,60 | 31,05 |
| 13645 | | OR | FKM | 80 | | | 19,10 | 1,60 | 32,33 |
| 12936 | | OR | FKM | 80 | | | 20,10 | 1,60 | 37,32 |
| 12937 | | OR | FKM | 80 | | | 21,10 | 1,60 | 40,27 |
| 12938 | | OR | FKM | 80 | | | 22,10 | 1,60 | 34,90 |
| 12939 | | OR | FKM | 80 | | | 25,10 | 1,60 | 40,24 |
| 12940 | | OR | FKM | 80 | | | 27,10 | 1,60 | 41,88 |
| 12941 | | OR | FKM | 80 | | | 29,10 | 1,60 | 45,51 |
| 12942 | | OR | FKM | 80 | | | 32,10 | 1,60 | 47,22 |
| 12943 | | OR | FKM | 80 | | | 35,10 | 1,60 | 49,79 |
| 12944 | | OR | FKM | 80 | | | 37,10 | 1,60 | 50,32 |
| FRENCH STANDARD R - JAPANESE STANDARD JIS 240 P+G | | | | | | | | | |
| 13109 | | OR | FKM | 80 | | | 2,40 | 1,90 | - |
| 13110 | | OR | FKM | 80 | | | 2,60 | 1,90 | 9,00 |
| 65500 | | OR | FKM | 80 | | | 2,80 | 1,90 | 9,51 |
| 13114 | | OR | FKM | 80 | | | 3,40 | 1,90 | 9,71 |
| 65506 | | OR | FKM | 80 | | | 3,80 | 1,90 | 9,51 |
| 13168 | | OR | FKM | 80 | | | 4,20 | 1,90 | 9,64 |
| 24941 | | OR | FKM | 80 | | | 4,80 | 1,90 | 9,88 |
| 13125 | | OR | FKM | 80 | | | 4,90 | 1,90 | 9,88 |
| 13133 | | OR | FKM | 80 | | | 5,70 | 1,90 | 11,19 |
| 24952 | | OR | FKM | 80 | | | 5,80 | 1,90 | 11,19 |
| 13139 | | OR | FKM | 80 | | | 6,40 | 1,90 | 10,67 |
| 24969 | | OR | FKM | 80 | | | 6,80 | 1,90 | 10,72 |
| 13144 | | OR | FKM | 80 | | | 7,20 | 1,90 | 10,80 |
| 24982 | | OR | FKM | 80 | | | 7,80 | 1,90 | 13,35 |
| 13150 | | OR | FKM | 80 | | | 8,00 | 1,90 | 13,55 |
| 24995 | | OR | FKM | 80 | | | 8,80 | 1,90 | 13,81 |
| 13158 | | OR | FKM | 80 | | | 8,90 | 1,90 | 13,81 |
| 25009 | | OR | FKM | 80 | | | 9,80 | 1,90 | 13,12 |
| METRIC STANDARD | | | | | | | | | |
| 61547 | | OR | FKM | 80 | | | 2,50 | 2,00 | 19,49 |
| 13113 | | OR | FKM | 80 | | | 3,00 | 2,00 | 19,59 |
| 10074 | | OR | FKM | 80 | | | 3,50 | 2,00 | 19,66 |
| 13121 | | OR | FKM | 80 | | | 4,00 | 2,00 | 17,60 |
| 23860 | | OR | FKM | 80 | | | 4,50 | 2,00 | 20,65 |
| 13129 | | OR | FKM | 80 | | | 5,00 | 2,00 | 18,73 |
| 24947 | | OR | FKM | 80 | | | 5,50 | 2,00 | 21,90 |
| 13136 | | OR | FKM | 80 | | | 6,00 | 2,00 | 19,41 |
| 13140 | | OR | FKM | 80 | | | 6,50 | 2,00 | 20,19 |
| 13142 | | OR | FKM | 80 | | | 7,00 | 2,00 | 21,72 |
| 13146 | | OR | FKM | 80 | | | 7,50 | 2,00 | 25,40 |
| 13151 | | OR | FKM | 80 | | | 8,00 | 2,00 | 23,05 |
| 24991 | | OR | FKM | 80 | | | 8,50 | 2,00 | 26,81 |
| 13161 | | OR | FKM | 80 | | | 9,00 | 2,00 | 23,71 |
| 12239 | | OR | FKM | 80 | | | 9,50 | 2,00 | 27,87 |
| 13170 | | OR | FKM | 80 | | | 10,00 | 2,00 | 24,64 |
| 10158 | | OR | FKM | 80 | | | 10,50 | 2,00 | 28,91 |

| CODICE | NUOVO CODICE | TIPO | MAT. | SH | RIFERIMENTI USA | RIFERIMENTI UK | d1 mm | d2 mm | LISTINO 5-2016 X 100 € |
|---|---|---|---|---|---|---|---|---|---|
| 13178 | | OR | FKM | 80 | | | 11,00 | 2,00 | 26,06 |
| 12251 | | OR | FKM | 80 | | | 11,50 | 2,00 | 31,34 |
| 13183 | | OR | FKM | 80 | | | 12,00 | 2,00 | 28,17 |
| 195344 | | OR | FKM | 80 | | | 12,50 | 2,00 | 33,51 |
| 13190 | | OR | FKM | 80 | | | 13,00 | 2,00 | 29,92 |
| 25044 | | OR | FKM | 80 | | | 13,50 | 2,00 | 35,54 |
| 13197 | | OR | FKM | 80 | | | 14,00 | 2,00 | 31,67 |
| 12063 | | OR | FKM | 80 | | | 14,50 | 2,00 | 37,32 |
| 13202 | | OR | FKM | 80 | | | 15,00 | 2,00 | 33,01 |
| 66495 | | OR | FKM | 80 | | | 15,50 | 2,00 | 38,84 |
| 13209 | | OR | FKM | 80 | | | 16,00 | 2,00 | 34,22 |
| 66496 | | OR | FKM | 80 | | | 16,50 | 2,00 | 40,11 |
| 13217 | | OR | FKM | 80 | | | 17,00 | 2,00 | 35,26 |
| 12283 | | OR | FKM | 80 | | | 17,50 | 2,00 | 41,55 |
| 13222 | | OR | FKM | 80 | | | 18,00 | 2,00 | 36,83 |
| 66497 | | OR | FKM | 80 | | | 18,50 | 2,00 | 40,45 |
| 13229 | | OR | FKM | 80 | | | 19,00 | 2,00 | 38,06 |
| 25096 | | OR | FKM | 80 | | | 19,50 | 2,00 | 44,55 |
| 13236 | | OR | FKM | 80 | | | 20,00 | 2,00 | 39,07 |
| 10293 | | OR | FKM | 80 | | | 20,50 | 2,00 | 46,33 |
| 13243 | | OR | FKM | 80 | | | 21,00 | 2,00 | 47,51 |
| 66498 | | OR | FKM | 80 | | | 21,50 | 2,00 | 47,51 |
| 13248 | | OR | FKM | 80 | | | 22,00 | 2,00 | 42,13 |
| 66499 | | OR | FKM | 80 | | | 22,50 | 2,00 | 48,65 |
| 13254 | | OR | FKM | 80 | | | 23,00 | 2,00 | 43,16 |
| 10339 | | OR | FKM | 80 | | | 23,50 | 2,00 | 49,81 |
| 13258 | | OR | FKM | 80 | | | 24,00 | 2,00 | 43,95 |
| 65620 | | OR | FKM | 80 | | | 24,50 | 2,00 | 50,71 |
| 13264 | | OR | FKM | 80 | | | 25,00 | 2,00 | 44,73 |
| 65625 | | OR | FKM | 80 | | | 25,50 | 2,00 | 51,56 |
| 13270 | | OR | FKM | 80 | | | 26,00 | 2,00 | 46,72 |
| 66500 | | OR | FKM | 80 | | | 26,50 | 2,00 | 53,89 |
| 13277 | | OR | FKM | 80 | | | 27,00 | 2,00 | 56,26 |
| 25144 | | OR | FKM | 80 | | | 27,50 | 2,00 | 56,26 |
| 13282 | | OR | FKM | 80 | | | 28,00 | 2,00 | 50,92 |
| 65634 | | OR | FKM | 80 | | | 28,50 | 2,00 | 58,76 |
| 197029 | | OR | FKM | 80 | | | 29,00 | 2,00 | 61,24 |
| 65637 | | OR | FKM | 80 | | | 29,50 | 2,00 | 61,24 |
| 13292 | | OR | FKM | 80 | | | 30,00 | 2,00 | 53,95 |
| 66501 | | OR | FKM | 80 | | | 30,50 | 2,00 | 62,25 |
| 13299 | | OR | FKM | 80 | | | 31,00 | 2,00 | 63,25 |
| 25177 | | OR | FKM | 80 | | | 31,50 | 2,00 | 63,25 |
| 13305 | | OR | FKM | 80 | | | 32,00 | 2,00 | 57,47 |
| 66502 | | OR | FKM | 80 | | | 32,50 | 2,00 | 66,35 |
| 13309 | | OR | FKM | 80 | | | 33,00 | 2,00 | 60,14 |
| 10479 | | OR | FKM | 80 | | | 33,50 | 2,00 | 69,40 |
| 13313 | | OR | FKM | 80 | | | 34,00 | 2,00 | 62,79 |
| 65649 | | OR | FKM | 80 | | | 34,50 | 2,00 | 72,39 |
| 13318 | | OR | FKM | 80 | | | 35,00 | 2,00 | 63,99 |

| CODICE | NUOVO CODICE | TIPO | MAT. | SH | RIFERIMENTI USA | RIFERIMENTI UK | d1 mm | d2 mm | LISTINO 5-2016 X 100 € |
|---|---|---|---|---|---|---|---|---|---|
| 65654 | | OR | FKM | 80 | | | 35,50 | 2,00 | 73,78 |
| 13324 | | OR | FKM | 80 | | | 36,00 | 2,00 | 65,10 |
| 66503 | | OR | FKM | 80 | | | 36,50 | 2,00 | 75,17 |
| 13330 | | OR | FKM | 80 | | | 37,00 | 2,00 | 66,31 |
| 65661 | | OR | FKM | 80 | | | 37,50 | 2,00 | 76,50 |
| 12345 | | OR | FKM | 80 | | | 38,00 | 2,00 | 69,55 |
| 25427 | | OR | FKM | 80 | | | 38,50 | 2,00 | 80,27 |
| 13339 | | OR | FKM | 80 | | | 39,00 | 2,00 | 84,08 |
| 65665 | | OR | FKM | 80 | | | 39,50 | 2,00 | 84,08 |
| 13345 | | OR | FKM | 80 | | | 40,00 | 2,00 | 85,00 |
| 12351 | | OR | FKM | 80 | | | 41,00 | 2,00 | 86,00 |
| 13355 | | OR | FKM | 80 | | | 42,00 | 2,00 | 87,14 |
| 13361 | | OR | FKM | 80 | | | 43,00 | 2,00 | 88,25 |
| 12356 | | OR | FKM | 80 | | | 44,00 | 2,00 | 89,34 |
| 13372 | | OR | FKM | 80 | | | 45,00 | 2,00 | 81,30 |
| 13376 | | OR | FKM | 80 | | | 46,00 | 2,00 | 80,83 |
| 13380 | | OR | FKM | 80 | | | 47,00 | 2,00 | 96,39 |
| 13384 | | OR | FKM | 80 | | | 48,00 | 2,00 | 85,76 |
| 10662 | | OR | FKM | 80 | | | 49,00 | 2,00 | 101,67 |
| 13390 | | OR | FKM | 80 | | | 50,00 | 2,00 | 104,16 |
| 13784 | | OR | FKM | 80 | | | 51,00 | 2,00 | 105,55 |
| 13396 | | OR | FKM | 80 | | | 52,00 | 2,00 | 106,94 |
| 12367 | | OR | FKM | 80 | | | 53,00 | 2,00 | 93,87 |
| 10732 | | OR | FKM | 80 | | | 54,00 | 2,00 | 109,81 |
| 13407 | | OR | FKM | 80 | | | 55,00 | 2,00 | 111,21 |
| 13413 | | OR | FKM | 80 | | | 56,00 | 2,00 | 97,50 |
| 13416 | | OR | FKM | 80 | | | 57,00 | 2,00 | 99,18 |
| 13420 | | OR | FKM | 80 | | | 58,00 | 2,00 | 100,81 |
| 13785 | | OR | FKM | 80 | | | 59,00 | 2,00 | 118,33 |
| 12377 | | OR | FKM | 80 | | | 60,00 | 2,00 | 120,26 |
| 10812 | | OR | FKM | 80 | | | 61,00 | 2,00 | 121,87 |
| 12380 | | OR | FKM | 80 | | | 62,00 | 2,00 | 123,49 |
| 13432 | | OR | FKM | 80 | | | 63,00 | 2,00 | 125,10 |
| 13695 | | OR | FKM | 80 | | | 64,00 | 2,00 | 126,49 |
| 12502 | | OR | FKM | 80 | | | 65,00 | 2,00 | 127,88 |
| 12388 | | OR | FKM | 80 | | | 66,00 | 2,00 | 129,27 |
| 10872 | | OR | FKM | 80 | | | 67,00 | 2,00 | 130,90 |
| 12389 | | OR | FKM | 80 | | | 68,00 | 2,00 | 132,04 |
| 66504 | | OR | FKM | 80 | | | 69,00 | 2,00 | 133,32 |
| 13452 | | OR | FKM | 80 | | | 70,00 | 2,00 | 140,09 |
| 10908 | | OR | FKM | 80 | | | 71,00 | 2,00 | 146,86 |
| 12190 | | OR | FKM | 80 | | | 72,00 | 2,00 | 153,69 |
| 13459 | | OR | FKM | 80 | | | 73,00 | 2,00 | 158,96 |
| 13461 | | OR | FKM | 80 | | | 74,00 | 2,00 | 142,41 |
| 26718 | | OR | FKM | 80 | | | 75,00 | 2,00 | 169,71 |
| 12406 | | OR | FKM | 80 | | | 76,00 | 2,00 | 173,60 |
| 66505 | | OR | FKM | 80 | | | 77,00 | 2,00 | 177,59 |
| 13470 | | OR | FKM | 80 | | | 78,00 | 2,00 | 181,58 |
| 10970 | | OR | FKM | 80 | | | 79,00 | 2,00 | 185,46 |

| CODICE | NUOVO CODICE | TIPO | MAT. | SH | RIFERIMENTI USA | RIFERIMENTI UK | d1 mm | d2 mm | LISTINO 5-2016 X 100 € |
|---|---|---|---|---|---|---|---|---|---|
| 13475 | | OR | FKM | 80 | | | 80,00 | 2,00 | 162,21 |
| 10994 | | OR | FKM | 80 | | | 81,00 | 2,00 | 188,87 |
| 196670 | | OR | FKM | 80 | | | 82,00 | 2,00 | 190,55 |
| 66506 | | OR | FKM | 80 | | | 83,00 | 2,00 | 195,01 |
| 11014 | | OR | FKM | 80 | | | 84,00 | 2,00 | 199,35 |
| 13484 | | OR | FKM | 80 | | | 85,00 | 2,00 | 176,48 |
| 13487 | | OR | FKM | 80 | | | 86,00 | 2,00 | 205,07 |
| 13488 | | OR | FKM | 80 | | | 87,00 | 2,00 | 206,58 |
| 13786 | | OR | FKM | 80 | | | 88,00 | 2,00 | 207,97 |
| 11062 | | OR | FKM | 80 | | | 89,00 | 2,00 | 211,38 |
| 13490 | | OR | FKM | 80 | | | 90,00 | 2,00 | 214,70 |
| 11082 | | OR | FKM | 80 | | | 91,00 | 2,00 | 218,21 |
| 66507 | | OR | FKM | 80 | | | 92,00 | 2,00 | 220,36 |
| 13787 | | OR | FKM | 80 | | | 93,00 | 2,00 | 222,39 |
| 13499 | | OR | FKM | 80 | | | 94,00 | 2,00 | 224,42 |
| 12422 | | OR | FKM | 80 | | | 95,00 | 2,00 | 227,12 |
| 13506 | | OR | FKM | 80 | | | 96,00 | 2,00 | 229,72 |
| 66508 | | OR | FKM | 80 | | | 97,00 | 2,00 | 232,40 |
| 12118 | | OR | FKM | 80 | | | 98,00 | 2,00 | 235,07 |
| 65762 | | OR | FKM | 80 | | | 99,00 | 2,00 | 237,77 |
| 12429 | | OR | FKM | 80 | | | 100,00 | 2,00 | 240,38 |
| | | BSTD METRIC BS 4518 - JAPAN STD JIS 240 P+G - SWEDISH STD SMS 1586 | | | | | | | |
| 12945 | | OR | FKM | 80 | | | 3,30 | 2,40 | 21,84 |
| 13641 | | OR | FKM | 80 | | | 3,60 | 2,40 | 21,84 |
| 12946 | | OR | FKM | 80 | | | 4,30 | 2,40 | 23,00 |
| 13891 | | OR | FKM | 80 | | | 4,60 | 2,40 | 26,53 |
| 12947 | | OR | FKM | 80 | | | 5,30 | 2,40 | 24,15 |
| 66509 | | OR | FKM | 80 | | | 5,50 | 2,40 | 27,85 |
| 194876 | | OR | FKM | 80 | | | 5,60 | 2,40 | 24,15 |
| 12948 | | OR | FKM | 80 | | | 6,30 | 2,40 | 24,15 |
| 13893 | | OR | FKM | 80 | | | 6,60 | 2,40 | 27,85 |
| 12949 | | OR | FKM | 80 | | | 7,30 | 2,40 | 25,86 |
| 13700 | | OR | FKM | 80 | | | 7,60 | 2,40 | 25,86 |
| 12950 | | OR | FKM | 80 | | | 8,30 | 2,40 | 27,59 |
| 13643 | | OR | FKM | 80 | | | 8,60 | 2,40 | 27,59 |
| 12951 | | OR | FKM | 80 | | | 9,30 | 2,40 | 28,74 |
| 13894 | | OR | FKM | 80 | | | 9,60 | 2,40 | 34,36 |
| 12952 | | OR | FKM | 80 | | | 10,30 | 2,40 | 30,48 |
| 13895 | | OR | FKM | 80 | | | 10,60 | 2,40 | 35,15 |
| 12953 | | OR | FKM | 80 | | | 11,30 | 2,40 | 32,19 |
| 66554 | | OR | FKM | 80 | | | 11,50 | 2,40 | 37,15 |
| 13701 | | OR | FKM | 80 | | | 11,60 | 2,40 | 32,19 |
| 12954 | | OR | FKM | 80 | | | 12,30 | 2,40 | 34,50 |
| 13896 | | OR | FKM | 80 | | | 12,60 | 2,40 | 39,81 |
| 12955 | | OR | FKM | 80 | | | 13,30 | 2,40 | 35,64 |
| 66555 | | OR | FKM | 80 | | | 13,50 | 2,40 | 42,06 |
| 13644 | | OR | FKM | 80 | | | 13,60 | 2,40 | 42,06 |
| 12956 | | OR | FKM | 80 | | | 14,30 | 2,40 | 37,35 |
| 13897 | | OR | FKM | 80 | | | 14,60 | 2,40 | 38,38 |

| CODICE | NUOVO CODICE | TIPO | MAT. | SH | RIFERIMENTI USA | RIFERIMENTI UK | d1 mm | d2 mm | LISTINO 5-2016 X 100 € |
|---|---|---|---|---|---|---|---|---|---|
| 12957 | | OR | FKM | 80 | | | 15,30 | 2,40 | 39,00 |
| 66557 | | OR | FKM | 80 | | | 15,50 | 2,40 | 46,19 |
| 13898 | | OR | FKM | 80 | | | 15,60 | 2,40 | 40,03 |
| 12958 | | OR | FKM | 80 | | | 16,30 | 2,40 | 40,57 |
| 13703 | | OR | FKM | 80 | | | 16,60 | 2,40 | 47,36 |
| 12959 | | OR | FKM | 80 | | | 17,30 | 2,40 | 41,55 |
| 66558 | | OR | FKM | 80 | | | 17,50 | 2,40 | 48,57 |
| 13899 | | OR | FKM | 80 | | | 17,60 | 2,40 | 42,09 |
| 12960 | | OR | FKM | 80 | | | 18,30 | 2,40 | 44,16 |
| 13900 | | OR | FKM | 80 | | | 18,60 | 2,40 | 50,92 |
| 12961 | | OR | FKM | 80 | | | 19,30 | 2,40 | 44,81 |
| 13901 | | OR | FKM | 80 | | | 19,60 | 2,40 | 51,70 |
| 12962 | | OR | FKM | 80 | | | 20,30 | 2,40 | 47,22 |
| 12963 | | OR | FKM | 80 | | | 21,30 | 2,40 | 48,85 |
| 66560 | | OR | FKM | 80 | | | 21,50 | 2,40 | 56,36 |
| 13902 | | OR | FKM | 80 | | | 21,60 | 2,40 | 48,85 |
| 12964 | | OR | FKM | 80 | | | 22,30 | 2,40 | 48,85 |
| 12965 | | OR | FKM | 80 | | | 23,30 | 2,40 | 51,74 |
| 66561 | | OR | FKM | 80 | | | 23,50 | 2,40 | 59,68 |
| 66562 | | OR | FKM | 80 | | | 24,50 | 2,40 | 61,61 |
| 13745 | | OR | FKM | 80 | | | 24,60 | 2,40 | 53,37 |
| 12966 | | OR | FKM | 80 | | | 25,30 | 2,40 | 54,41 |
| 10381 | | OR | FKM | 80 | | | 26,30 | 2,40 | 66,35 |
| 66563 | | OR | FKM | 80 | | | 27,50 | 2,40 | 66,35 |
| 13903 | | OR | FKM | 80 | | | 27,60 | 2,40 | 57,47 |
| 13904 | | OR | FKM | 80 | | | 29,60 | 2,40 | 60,58 |
| 12968 | | OR | FKM | 80 | | | 30,30 | 2,40 | 60,58 |
| 13905 | | OR | FKM | 80 | | | 31,60 | 2,40 | 73,42 |
| 12969 | | OR | FKM | 80 | | | 33,30 | 2,40 | 75,92 |
| 13675 | | OR | FKM | 80 | | | 34,60 | 2,40 | 87,67 |
| 13907 | | OR | FKM | 80 | | | 37,60 | 2,40 | 94,72 |
| 13908 | | OR | FKM | 80 | | | 39,60 | 2,40 | 85,18 |
| 13707 | | OR | FKM | 80 | | | 41,60 | 2,40 | 101,85 |
| 13909 | | OR | FKM | 80 | | | 44,60 | 2,40 | 106,02 |
| 13910 | | OR | FKM | 80 | | | 47,60 | 2,40 | 97,04 |
| 13911 | | OR | FKM | 80 | | | 49,60 | 2,40 | 117,30 |
| 13912 | | OR | FKM | 80 | | | 51,60 | 2,40 | 120,83 |
| 13913 | | OR | FKM | 80 | | | 54,60 | 2,40 | 125,56 |
| 13914 | | OR | FKM | 80 | | | 57,60 | 2,40 | 130,26 |
| 13915 | | OR | FKM | 80 | | | 59,60 | 2,40 | 134,43 |
| 13916 | | OR | FKM | 80 | | | 61,60 | 2,40 | 137,38 |
| 13917 | | OR | FKM | 80 | | | 64,60 | 2,40 | 142,77 |
| 66564 | | OR | FKM | 80 | | | 67,60 | 2,40 | 148,03 |
| 13918 | | OR | FKM | 80 | | | 69,60 | 2,40 | 151,03 |
| | | | | METRIC STANDARD | | | | | |
| 13122 | | OR | FKM | 80 | | | 4,00 | 2,50 | 27,67 |
| 66565 | | OR | FKM | 80 | | | 4,60 | 2,50 | 27,85 |
| 13130 | | OR | FKM | 80 | | | 5,00 | 2,50 | 24,18 |
| 66568 | | OR | FKM | 80 | | | 5,50 | 2,50 | 28,31 |

| CODICE | NUOVO CODICE | TIPO | MAT. | SH | RIFERIMENTI USA | RIFERIMENTI UK | d1 mm | d2 mm | LISTINO 5-2016 X 100 € |
|---|---|---|---|---|---|---|---|---|---|
| 13137 | | OR | FKM | 80 | | | 6,00 | 2,50 | 24,93 |
| 25365 | | OR | FKM | 80 | | | 6,50 | 2,50 | 29,27 |
| 13143 | | OR | FKM | 80 | | | 7,00 | 2,50 | 25,68 |
| 12230 | | OR | FKM | 80 | | | 7,50 | 2,50 | 29,84 |
| 13153 | | OR | FKM | 80 | | | 8,00 | 2,50 | 26,96 |
| 13157 | | OR | FKM | 80 | | | 8,50 | 2,50 | 32,15 |
| 196704 | | OR | FKM | 80 | | | 9,00 | 2,50 | 28,74 |
| 13167 | | OR | FKM | 80 | | | 9,50 | 2,50 | 35,18 |
| 13172 | | OR | FKM | 80 | | | 10,00 | 2,50 | 31,19 |
| 25988 | | OR | FKM | 80 | | | 10,50 | 2,50 | 36,47 |
| 13179 | | OR | FKM | 80 | | | 11,00 | 2,50 | 33,11 |
| 10175 | | OR | FKM | 80 | | | 11,50 | 2,50 | 39,81 |
| 13184 | | OR | FKM | 80 | | | 12,00 | 2,50 | 35,61 |
| 13188 | | OR | FKM | 80 | | | 12,50 | 2,50 | 41,45 |
| 13191 | | OR | FKM | 80 | | | 13,00 | 2,50 | 36,19 |
| 12265 | | OR | FKM | 80 | | | 13,50 | 2,50 | 43,04 |
| 13198 | | OR | FKM | 80 | | | 14,00 | 2,50 | 37,99 |
| 25054 | | OR | FKM | 80 | | | 14,50 | 2,50 | 44,55 |
| 13203 | | OR | FKM | 80 | | | 15,00 | 2,50 | 39,07 |
| 66569 | | OR | FKM | 80 | | | 15,50 | 2,50 | 46,79 |
| 13210 | | OR | FKM | 80 | | | 16,00 | 2,50 | 41,07 |
| 10241 | | OR | FKM | 80 | | | 16,50 | 2,50 | 47,97 |
| 13218 | | OR | FKM | 80 | | | 17,00 | 2,50 | 42,09 |
| 66570 | | OR | FKM | 80 | | | 17,50 | 2,50 | 49,68 |
| 13223 | | OR | FKM | 80 | | | 18,00 | 2,50 | 43,95 |
| 10267 | | OR | FKM | 80 | | | 18,50 | 2,50 | 51,70 |
| 13230 | | OR | FKM | 80 | | | 19,00 | 2,50 | 45,16 |
| 10274 | | OR | FKM | 80 | | | 19,50 | 2,50 | 52,60 |
| 13237 | | OR | FKM | 80 | | | 20,00 | 2,50 | 45,94 |
| 12298 | | OR | FKM | 80 | | | 20,50 | 2,50 | 56,26 |
| 194163 | | OR | FKM | 80 | | | 21,00 | 2,50 | 49,99 |
| 12302 | | OR | FKM | 80 | | | 21,50 | 2,50 | 57,69 |
| 13249 | | OR | FKM | 80 | | | 22,00 | 2,50 | 51,74 |
| 12070 | | OR | FKM | 80 | | | 22,50 | 2,50 | 59,68 |
| 13255 | | OR | FKM | 80 | | | 23,00 | 2,50 | 53,37 |
| 25118 | | OR | FKM | 80 | | | 23,50 | 2,50 | 61,61 |
| 13259 | | OR | FKM | 80 | | | 24,00 | 2,50 | 54,63 |
| 25127 | | OR | FKM | 80 | | | 24,50 | 2,50 | 63,03 |
| 13265 | | OR | FKM | 80 | | | 25,00 | 2,50 | 55,72 |
| 66571 | | OR | FKM | 80 | | | 25,50 | 2,50 | 64,32 |
| 13271 | | OR | FKM | 80 | | | 26,00 | 2,50 | 57,47 |
| 10382 | | OR | FKM | 80 | | | 26,50 | 2,50 | 66,35 |
| 13278 | | OR | FKM | 80 | | | 27,00 | 2,50 | 58,94 |
| 10401 | | OR | FKM | 80 | | | 27,50 | 2,50 | 67,98 |
| 132583 | | OR | FKM | 80 | | | 28,00 | 2,50 | 60,36 |
| 66572 | | OR | FKM | 80 | | | 28,50 | 2,50 | 69,66 |
| 13288 | | OR | FKM | 80 | | | 29,00 | 2,50 | 72,96 |
| 13293 | | OR | FKM | 80 | | | 30,00 | 2,50 | 64,70 |
| 13300 | | OR | FKM | 80 | | | 31,00 | 2,50 | 76,28 |

| CODICE | NUOVO CODICE | TIPO | MAT. | SH | RIFERIMENTI USA | RIFERIMENTI UK | d1 mm | d2 mm | LISTINO 5-2016 X 100 € |
|---|---|---|---|---|---|---|---|---|---|
| 25179 | | OR | FKM | 80 | | | 31,50 | 2,50 | 76,28 |
| 13306 | | OR | FKM | 80 | | | 32,00 | 2,50 | 77,20 |
| 13310 | | OR | FKM | 80 | | | 33,00 | 2,50 | 78,87 |
| 25198 | | OR | FKM | 80 | | | 33,50 | 2,50 | 91,02 |
| 12333 | | OR | FKM | 80 | | | 34,00 | 2,50 | 80,65 |
| 66575 | | OR | FKM | 80 | | | 34,50 | 2,50 | 93,05 |
| 13319 | | OR | FKM | 80 | | | 35,00 | 2,50 | 82,22 |
| 66576 | | OR | FKM | 80 | | | 35,50 | 2,50 | 94,90 |
| 13325 | | OR | FKM | 80 | | | 36,00 | 2,50 | 96,65 |
| 75650 | | OR | FKM | 80 | | | 36,50 | 2,50 | 96,65 |
| 13331 | | OR | FKM | 80 | | | 37,00 | 2,50 | 85,53 |
| 66577 | | OR | FKM | 80 | | | 37,50 | 2,50 | 98,72 |
| 13335 | | OR | FKM | 80 | | | 38,00 | 2,50 | 100,57 |
| 66578 | | OR | FKM | 80 | | | 38,50 | 2,50 | 100,57 |
| 13340 | | OR | FKM | 80 | | | 39,00 | 2,50 | 102,31 |
| 66579 | | OR | FKM | 80 | | | 39,50 | 2,50 | 102,31 |
| 13346 | | OR | FKM | 80 | | | 40,00 | 2,50 | 104,81 |
| 13351 | | OR | FKM | 80 | | | 41,00 | 2,50 | 106,12 |
| 13356 | | OR | FKM | 80 | | | 42,00 | 2,50 | 93,16 |
| 13362 | | OR | FKM | 80 | | | 43,00 | 2,50 | 109,25 |
| 13366 | | OR | FKM | 80 | | | 44,00 | 2,50 | 111,00 |
| 13373 | | OR | FKM | 80 | | | 45,00 | 2,50 | 98,24 |
| 10630 | | OR | FKM | 80 | | | 46,00 | 2,50 | 114,35 |
| 13381 | | OR | FKM | 80 | | | 47,00 | 2,50 | 100,11 |
| 12362 | | OR | FKM | 80 | | | 48,00 | 2,50 | 119,80 |
| 13788 | | OR | FKM | 80 | | | 49,00 | 2,50 | 128,88 |
| 13391 | | OR | FKM | 80 | | | 50,00 | 2,50 | 105,55 |
| 10694 | | OR | FKM | 80 | | | 51,00 | 2,50 | 123,31 |
| 13397 | | OR | FKM | 80 | | | 52,00 | 2,50 | 124,82 |
| 12368 | | OR | FKM | 80 | | | 53,00 | 2,50 | 110,82 |
| 13402 | | OR | FKM | 80 | | | 54,00 | 2,50 | 111,74 |
| 13408 | | OR | FKM | 80 | | | 55,00 | 2,50 | 130,08 |
| 10749 | | OR | FKM | 80 | | | 56,00 | 2,50 | 133,04 |
| 13417 | | OR | FKM | 80 | | | 57,00 | 2,50 | 135,19 |
| 13421 | | OR | FKM | 80 | | | 58,00 | 2,50 | 137,38 |
| 10784 | | OR | FKM | 80 | | | 59,00 | 2,50 | 139,71 |
| 13427 | | OR | FKM | 80 | | | 60,00 | 2,50 | 140,63 |
| 13966 | | OR | FKM | 80 | | | 61,00 | 2,50 | 141,84 |
| 12381 | | OR | FKM | 80 | | | 62,00 | 2,50 | 142,87 |
| 13433 | | OR | FKM | 80 | | | 63,00 | 2,50 | 143,86 |
| 66580 | | OR | FKM | 80 | | | 64,00 | 2,50 | 148,89 |
| 13438 | | OR | FKM | 80 | | | 65,00 | 2,50 | 149,82 |
| 66110 | | OR | FKM | 80 | | | 66,00 | 2,50 | 150,42 |
| 13445 | | OR | FKM | 80 | | | 67,00 | 2,50 | 150,80 |
| 13448 | | OR | FKM | 80 | | | 68,00 | 2,50 | 154,05 |
| 24387 | | OR | FKM | 80 | | | 69,00 | 2,50 | 155,65 |
| 13453 | | OR | FKM | 80 | | | 70,00 | 2,50 | 157,68 |
| 13789 | | OR | FKM | 80 | | | 71,00 | 2,50 | 159,70 |
| 13677 | | OR | FKM | 80 | | | 72,00 | 2,50 | 186,57 |

| CODICE | NUOVO CODICE | TIPO | MAT. | SH | RIFERIMENTI USA | RIFERIMENTI UK | d1 mm | d2 mm | LISTINO 5-2016 X 100 € |
|---|---|---|---|---|---|---|---|---|---|
| 12398 | | OR | FKM | 80 | | | 73,00 | 2,50 | 189,22 |
| 10927 | | OR | FKM | 80 | | | 74,00 | 2,50 | 191,83 |
| 13463 | | OR | FKM | 80 | | | 75,00 | 2,50 | 196,57 |
| 13467 | | OR | FKM | 80 | | | 76,00 | 2,50 | 201,38 |
| 25313 | | OR | FKM | 80 | | | 77,00 | 2,50 | 206,64 |
| 12408 | | OR | FKM | 80 | | | 78,00 | 2,50 | 207,85 |
| 26721 | | OR | FKM | 80 | | | 79,00 | 2,50 | 209,60 |
| 13476 | | OR | FKM | 80 | | | 80,00 | 2,50 | 182,75 |
| 23810 | | OR | FKM | 80 | | | 81,00 | 2,50 | 212,02 |
| 13649 | | OR | FKM | 80 | | | 82,00 | 2,50 | 213,23 |
| 12111 | | OR | FKM | 80 | | | 83,00 | 2,50 | 226,83 |
| 13791 | | OR | FKM | 80 | | | 84,00 | 2,50 | 228,04 |
| 13485 | | OR | FKM | 80 | | | 85,00 | 2,50 | 229,15 |
| 66581 | | OR | FKM | 80 | | | 86,00 | 2,50 | 230,37 |
| 25332 | | OR | FKM | 80 | | | 87,00 | 2,50 | 231,48 |
| 26727 | | OR | FKM | 80 | | | 88,00 | 2,50 | 231,48 |
| 66582 | | OR | FKM | 80 | | | 89,00 | 2,50 | 235,03 |
| 13491 | | OR | FKM | 80 | | | 90,00 | 2,50 | 238,59 |
| 66122 | | OR | FKM | 80 | | | 91,00 | 2,50 | 238,59 |
| 66583 | | OR | FKM | 80 | | | 92,00 | 2,50 | 242,15 |
| 12117 | | OR | FKM | 80 | | | 93,00 | 2,50 | 245,71 |
| 13500 | | OR | FKM | 80 | | | 94,00 | 2,50 | 249,28 |
| 13502 | | OR | FKM | 80 | | | 95,00 | 2,50 | 252,84 |
| 12425 | | OR | FKM | 80 | | | 96,00 | 2,50 | 256,39 |
| 66584 | | OR | FKM | 80 | | | 97,00 | 2,50 | 256,39 |
| 11132 | | OR | FKM | 80 | | | 98,00 | 2,50 | 259,95 |
| 66585 | | OR | FKM | 80 | | | 99,00 | 2,50 | 263,51 |
| 13792 | | OR | FKM | 80 | | | 100,00 | 2,50 | 267,08 |
| 66586 | | OR | FKM | 80 | | | 101,00 | 2,50 | 270,63 |
| 26735 | | OR | FKM | 80 | | | 102,00 | 2,50 | 274,19 |
| 12121 | | OR | FKM | 80 | | | 103,00 | 2,50 | 274,19 |
| 11166 | | OR | FKM | 80 | | | 104,00 | 2,50 | 277,75 |
| 11176 | | OR | FKM | 80 | | | 105,00 | 2,50 | 281,31 |
| 11193 | | OR | FKM | 80 | | | 106,00 | 2,50 | 284,88 |
| 13651 | | OR | FKM | 80 | | | 107,00 | 2,50 | 284,88 |
| 25473 | | OR | FKM | 80 | | | 108,00 | 2,50 | 288,44 |
| 12124 | | OR | FKM | 80 | | | 109,00 | 2,50 | 292,00 |
| 13793 | | OR | FKM | 80 | | | 110,00 | 2,50 | 295,56 |
| 66587 | | OR | FKM | 80 | | | 111,00 | 2,50 | 299,13 |
| 11225 | | OR | FKM | 80 | | | 112,00 | 2,50 | 299,13 |
| 12129 | | OR | FKM | 80 | | | 113,00 | 2,50 | 302,69 |
| 13794 | | OR | FKM | 80 | | | 114,00 | 2,50 | 306,24 |
| 13795 | | OR | FKM | 80 | | | 115,00 | 2,50 | 309,80 |
| 66588 | | OR | FKM | 80 | | | 116,00 | 2,50 | 313,37 |
| 11257 | | OR | FKM | 80 | | | 117,00 | 2,50 | 316,93 |
| 66589 | | OR | FKM | 80 | | | 118,00 | 2,50 | 316,93 |
| 66590 | | OR | FKM | 80 | | | 119,00 | 2,50 | 320,49 |
| 13533 | | OR | FKM | 80 | | | 120,00 | 2,50 | 324,05 |
| 11276 | | OR | FKM | 80 | | | 121,00 | 2,50 | 324,05 |

| CODICE | NUOVO CODICE | TIPO | MAT. | SH | RIFERIMENTI USA | RIFERIMENTI UK | d1 mm | d2 mm | LISTINO 5-2016 X 100 € |
|---|---|---|---|---|---|---|---|---|---|
| 25494 | | OR | FKM | 80 | | | 122,00 | 2,50 | 327,62 |
| 23981 | | OR | FKM | 80 | | | 123,00 | 2,50 | 331,18 |
| 66591 | | OR | FKM | 80 | | | 124,00 | 2,50 | 331,18 |
| 9926 | | OR | FKM | 80 | | | 125,00 | 2,50 | 334,74 |
| 66592 | | OR | FKM | 80 | | | 126,00 | 2,50 | 334,74 |
| 66593 | | OR | FKM | 80 | | | 127,00 | 2,50 | 345,42 |
| 11305 | | OR | FKM | 80 | | | 128,00 | 2,50 | 352,54 |
| 66594 | | OR | FKM | 80 | | | 129,00 | 2,50 | 363,23 |
| 9929 | | OR | FKM | 80 | | | 130,00 | 2,50 | 373,92 |
| 66595 | | OR | FKM | 80 | | | 131,00 | 2,50 | 384,59 |
| 13796 | | OR | FKM | 80 | | | 132,00 | 2,50 | 388,15 |
| 13797 | | OR | FKM | 80 | | | 133,00 | 2,50 | 395,28 |
| 66596 | | OR | FKM | 80 | | | 134,00 | 2,50 | 402,40 |
| 9934 | | OR | FKM | 80 | | | 135,00 | 2,50 | 409,53 |
| 66157 | | OR | FKM | 80 | | | 136,00 | 2,50 | 416,64 |
| 25511 | | OR | FKM | 80 | | | 137,00 | 2,50 | 423,77 |
| 13798 | | OR | FKM | 80 | | | 138,00 | 2,50 | 430,88 |
| 13799 | | OR | FKM | 80 | | | 139,00 | 2,50 | 438,00 |
| 9674 | | OR | FKM | 80 | | | 140,00 | 2,50 | 441,57 |
| 66597 | | OR | FKM | 80 | | | 141,00 | 2,50 | 448,68 |
| 66598 | | OR | FKM | 80 | | | 142,00 | 2,50 | 452,24 |
| 66599 | | OR | FKM | 80 | | | 143,00 | 2,50 | 459,37 |
| 66600 | | OR | FKM | 80 | | | 144,00 | 2,50 | 462,93 |
| 11380 | | OR | FKM | 80 | | | 145,00 | 2,50 | 466,49 |
| 66601 | | OR | FKM | 80 | | | 146,00 | 2,50 | 470,05 |
| 66602 | | OR | FKM | 80 | | | 147,00 | 2,50 | 470,05 |
| 66603 | | OR | FKM | 80 | | | 148,00 | 2,50 | 473,62 |
| 66604 | | OR | FKM | 80 | | | 149,00 | 2,50 | 477,18 |
| 9684 | | OR | FKM | 80 | | | 150,00 | 2,50 | 477,18 |
| | | | | FRENCH STANDARD R | | | | | |
| 13159 | | OR | FKM | 80 | | | 8,90 | 2,70 | 21,14 |
| 13176 | | OR | FKM | 80 | | | 10,50 | 2,70 | 24,77 |
| 13187 | | OR | FKM | 80 | | | 12,10 | 2,70 | 26,00 |
| 13195 | | OR | FKM | 80 | | | 13,60 | 2,70 | 27,85 |
| 13206 | | OR | FKM | 80 | | | 15,10 | 2,70 | 27,39 |
| 13215 | | OR | FKM | 80 | | | 16,90 | 2,70 | 31,17 |
| 13227 | | OR | FKM | 80 | | | 18,40 | 2,70 | 34,64 |
| 13835 | | OR | FKM | 80 | | | 27,30 | 2,70 | 97,45 |
| | | | | METRIC STANDARD | | | | | |
| 10067 | | OR | FKM | 80 | | | 3,00 | 3,00 | 29,60 |
| 10075 | | OR | FKM | 80 | | | 3,50 | 3,00 | 30,48 |
| 12220 | | OR | FKM | 80 | | | 4,00 | 3,00 | 31,09 |
| 66627 | | OR | FKM | 80 | | | 4,50 | 3,00 | 31,37 |
| 13131 | | OR | FKM | 80 | | | 5,00 | 3,00 | 31,97 |
| 66628 | | OR | FKM | 80 | | | 5,50 | 3,00 | 33,66 |
| 13138 | | OR | FKM | 80 | | | 6,00 | 3,00 | 30,63 |
| 12227 | | OR | FKM | 80 | | | 6,50 | 3,00 | 36,89 |
| 12229 | | OR | FKM | 80 | | | 7,00 | 3,00 | 33,29 |
| 65535 | | OR | FKM | 80 | | | 7,50 | 3,00 | 39,99 |

| CODICE | NUOVO CODICE | TIPO | MAT. | SH | RIFERIMENTI USA | RIFERIMENTI UK | d1 mm | d2 mm | LISTINO 5-2016 X 100 € |
|---|---|---|---|---|---|---|---|---|---|
| 13154 | | OR | FKM | 80 | | | 8,00 | 3,00 | 35,61 |
| 10132 | | OR | FKM | 80 | | | 8,50 | 3,00 | 43,04 |
| 13165 | | OR | FKM | 80 | | | 9,00 | 3,00 | 38,82 |
| 12240 | | OR | FKM | 80 | | | 9,50 | 3,00 | 46,01 |
| 13173 | | OR | FKM | 80 | | | 10,00 | 3,00 | 41,07 |
| 66629 | | OR | FKM | 80 | | | 10,50 | 3,00 | 48,39 |
| 12248 | | OR | FKM | 80 | | | 11,00 | 3,00 | 42,74 |
| 13181 | | OR | FKM | 80 | | | 11,50 | 3,00 | 50,21 |
| 13185 | | OR | FKM | 80 | | | 12,00 | 3,00 | 44,16 |
| 66630 | | OR | FKM | 80 | | | 12,50 | 3,00 | 51,64 |
| 13192 | | OR | FKM | 80 | | | 13,00 | 3,00 | 45,33 |
| 25047 | | OR | FKM | 80 | | | 13,50 | 3,00 | 52,52 |
| 13199 | | OR | FKM | 80 | | | 14,00 | 3,00 | 45,62 |
| 10219 | | OR | FKM | 80 | | | 14,50 | 3,00 | 53,43 |
| 13204 | | OR | FKM | 80 | | | 15,00 | 3,00 | 46,30 |
| 64759 | | OR | FKM | 80 | | | 15,50 | 3,00 | 53,43 |
| 13211 | | OR | FKM | 80 | | | 16,00 | 3,00 | 46,30 |
| 66631 | | OR | FKM | 80 | | | 16,50 | 3,00 | 54,56 |
| 13219 | | OR | FKM | 80 | | | 17,00 | 3,00 | 48,04 |
| 26647 | | OR | FKM | 80 | | | 17,50 | 3,00 | 56,80 |
| 13224 | | OR | FKM | 80 | | | 18,00 | 3,00 | 50,46 |
| 25087 | | OR | FKM | 80 | | | 18,50 | 3,00 | 59,04 |
| 13231 | | OR | FKM | 80 | | | 19,00 | 3,00 | 51,88 |
| 13638 | | OR | FKM | 80 | | | 19,50 | 3,00 | 60,65 |
| 13238 | | OR | FKM | 80 | | | 20,00 | 3,00 | 53,23 |
| 66632 | | OR | FKM | 80 | | | 20,50 | 3,00 | 62,79 |
| 13245 | | OR | FKM | 80 | | | 21,00 | 3,00 | 55,52 |
| 13919 | | OR | FKM | 80 | | | 21,50 | 3,00 | 65,45 |
| 13250 | | OR | FKM | 80 | | | 22,00 | 3,00 | 57,91 |
| 13920 | | OR | FKM | 80 | | | 22,50 | 3,00 | 68,12 |
| 13256 | | OR | FKM | 80 | | | 23,00 | 3,00 | 60,18 |
| 10340 | | OR | FKM | 80 | | | 23,50 | 3,00 | 70,71 |
| 13260 | | OR | FKM | 80 | | | 24,00 | 3,00 | 62,49 |
| 12977 | | OR | FKM | 80 | | | 24,20 | 3,00 | 62,95 |
| 13921 | | OR | FKM | 80 | | | 24,50 | 3,00 | 72,78 |
| 66633 | | OR | FKM | 80 | | | 24,60 | 3,00 | 72,78 |
| 13266 | | OR | FKM | 80 | | | 25,00 | 3,00 | 63,59 |
| 13922 | | OR | FKM | 80 | | | 25,50 | 3,00 | 75,57 |
| 13272 | | OR | FKM | 80 | | | 26,00 | 3,00 | 65,91 |
| 12979 | | OR | FKM | 80 | | | 26,20 | 3,00 | 66,31 |
| 13923 | | OR | FKM | 80 | | | 26,50 | 3,00 | 67,02 |
| 13279 | | OR | FKM | 80 | | | 27,00 | 3,00 | 68,16 |
| 13924 | | OR | FKM | 80 | | | 27,50 | 3,00 | 69,27 |
| 13284 | | OR | FKM | 80 | | | 28,00 | 3,00 | 70,47 |
| 66634 | | OR | FKM | 80 | | | 28,50 | 3,00 | 82,58 |
| 13289 | | OR | FKM | 80 | | | 29,00 | 3,00 | 72,68 |
| 12981 | | OR | FKM | 80 | | | 29,20 | 3,00 | 73,14 |
| 13925 | | OR | FKM | 80 | | | 29,50 | 3,00 | 84,43 |
| 13294 | | OR | FKM | 80 | | | 30,00 | 3,00 | 73,50 |

| CODICE | NUOVO CODICE | TIPO | MAT. | SH | RIFERIMENTI USA | RIFERIMENTI UK | d1 mm | d2 mm | LISTINO 5-2016 X 100 € |
|---|---|---|---|---|---|---|---|---|---|
| 66635 | | OR | FKM | 80 | | | 30,50 | 3,00 | 86,56 |
| 13301 | | OR | FKM | 80 | | | 31,00 | 3,00 | 76,50 |
| 13926 | | OR | FKM | 80 | | | 31,50 | 3,00 | 90,46 |
| 13307 | | OR | FKM | 80 | | | 32,00 | 3,00 | 80,27 |
| 12983 | | OR | FKM | 80 | | | 32,20 | 3,00 | 80,73 |
| 13927 | | OR | FKM | 80 | | | 32,50 | 3,00 | 93,87 |
| 13311 | | OR | FKM | 80 | | | 33,00 | 3,00 | 82,51 |
| 26683 | | OR | FKM | 80 | | | 33,50 | 3,00 | 97,50 |
| 13314 | | OR | FKM | 80 | | | 34,00 | 3,00 | 86,46 |
| 12984 | | OR | FKM | 80 | | | 34,20 | 3,00 | 86,92 |
| 13928 | | OR | FKM | 80 | | | 34,50 | 3,00 | 102,02 |
| 13320 | | OR | FKM | 80 | | | 35,00 | 3,00 | 90,46 |
| 13929 | | OR | FKM | 80 | | | 35,50 | 3,00 | 95,05 |
| 13326 | | OR | FKM | 80 | | | 36,00 | 3,00 | 92,75 |
| 12986 | | OR | FKM | 80 | | | 36,20 | 3,00 | 93,33 |
| 13930 | | OR | FKM | 80 | | | 36,50 | 3,00 | 108,43 |
| 13332 | | OR | FKM | 80 | | | 37,00 | 3,00 | 95,18 |
| 25214 | | OR | FKM | 80 | | | 37,47 | 3,00 | 111,10 |
| 13931 | | OR | FKM | 80 | | | 37,50 | 3,00 | 111,21 |
| 13336 | | OR | FKM | 80 | | | 38,00 | 3,00 | 97,58 |
| 10543 | | OR | FKM | 80 | | | 38,50 | 3,00 | 113,99 |
| 13341 | | OR | FKM | 80 | | | 39,00 | 3,00 | 99,88 |
| 12988 | | OR | FKM | 80 | | | 39,20 | 3,00 | 100,45 |
| 13932 | | OR | FKM | 80 | | | 39,50 | 3,00 | 116,76 |
| 13347 | | OR | FKM | 80 | | | 40,00 | 3,00 | 102,31 |
| 13352 | | OR | FKM | 80 | | | 41,00 | 3,00 | 104,73 |
| 13933 | | OR | FKM | 80 | | | 41,50 | 3,00 | 122,21 |
| 13357 | | OR | FKM | 80 | | | 42,00 | 3,00 | 107,04 |
| 12990 | | OR | FKM | 80 | | | 42,20 | 3,00 | 107,58 |
| 13934 | | OR | FKM | 80 | | | 42,50 | 3,00 | 126,09 |
| 13363 | | OR | FKM | 80 | | | 43,00 | 3,00 | 128,58 |
| 23930 | | OR | FKM | 80 | | | 43,69 | 3,00 | 131,65 |
| 13367 | | OR | FKM | 80 | | | 44,00 | 3,00 | 115,90 |
| 12991 | | OR | FKM | 80 | | | 44,20 | 3,00 | 115,90 |
| 13935 | | OR | FKM | 80 | | | 44,50 | 3,00 | 133,68 |
| 13374 | | OR | FKM | 80 | | | 45,00 | 3,00 | 115,90 |
| 13377 | | OR | FKM | 80 | | | 46,00 | 3,00 | 115,90 |
| 13382 | | OR | FKM | 80 | | | 47,00 | 3,00 | 133,68 |
| 13385 | | OR | FKM | 80 | | | 48,00 | 3,00 | 115,90 |
| 13387 | | OR | FKM | 80 | | | 49,00 | 3,00 | 118,15 |
| 12994 | | OR | FKM | 80 | | | 49,50 | 3,00 | 119,26 |
| 13392 | | OR | FKM | 80 | | | 50,00 | 3,00 | 120,48 |
| 13800 | | OR | FKM | 80 | | | 51,00 | 3,00 | 141,56 |
| 13398 | | OR | FKM | 80 | | | 52,00 | 3,00 | 124,88 |
| 10720 | | OR | FKM | 80 | | | 53,00 | 3,00 | 144,15 |
| 13403 | | OR | FKM | 80 | | | 54,00 | 3,00 | 125,00 |
| 12996 | | OR | FKM | 80 | | | 54,50 | 3,00 | 125,00 |
| 13409 | | OR | FKM | 80 | | | 55,00 | 3,00 | 125,46 |
| 13414 | | OR | FKM | 80 | | | 56,00 | 3,00 | 127,66 |

| CODICE | NUOVO CODICE | TIPO | MAT. | SH | RIFERIMENTI USA | RIFERIMENTI UK | d1 mm | d2 mm | LISTINO 5-2016 X 100 € |
|---|---|---|---|---|---|---|---|---|---|
| 13418 | | OR | FKM | 80 | | | 57,00 | 3,00 | 129,80 |
| 13422 | | OR | FKM | 80 | | | 58,00 | 3,00 | 131,93 |
| 13425 | | OR | FKM | 80 | | | 59,00 | 3,00 | 134,15 |
| 25279 | | OR | FKM | 80 | | | 59,36 | 3,00 | 155,73 |
| 13000 | | OR | FKM | 80 | | | 59,50 | 3,00 | 135,19 |
| 13428 | | OR | FKM | 80 | | | 60,00 | 3,00 | 136,28 |
| 10813 | | OR | FKM | 80 | | | 61,00 | 3,00 | 160,25 |
| 13431 | | OR | FKM | 80 | | | 62,00 | 3,00 | 133,50 |
| 12384 | | OR | FKM | 80 | | | 63,00 | 3,00 | 163,80 |
| 13435 | | OR | FKM | 80 | | | 64,00 | 3,00 | 167,36 |
| 13003 | | OR | FKM | 80 | | | 64,50 | 3,00 | 146,00 |
| 13439 | | OR | FKM | 80 | | | 65,00 | 3,00 | 170,93 |
| 13443 | | OR | FKM | 80 | | | 66,00 | 3,00 | 149,24 |
| 13446 | | OR | FKM | 80 | | | 67,00 | 3,00 | 174,49 |
| 12390 | | OR | FKM | 80 | | | 68,00 | 3,00 | 153,59 |
| 194256 | | OR | FKM | 80 | | | 69,00 | 3,00 | 178,05 |
| 13004 | | OR | FKM | 80 | | | 69,50 | 3,00 | 156,83 |
| 13454 | | OR | FKM | 80 | | | 70,00 | 3,00 | 157,97 |
| 12396 | | OR | FKM | 80 | | | 71,00 | 3,00 | 185,18 |
| 13457 | | OR | FKM | 80 | | | 72,00 | 3,00 | 192,30 |
| 12399 | | OR | FKM | 80 | | | 73,00 | 3,00 | 195,86 |
| 13462 | | OR | FKM | 80 | | | 74,00 | 3,00 | 172,68 |
| 13005 | | OR | FKM | 80 | | | 74,50 | 3,00 | 176,02 |
| 13464 | | OR | FKM | 80 | | | 75,00 | 3,00 | 177,20 |
| 13468 | | OR | FKM | 80 | | | 76,00 | 3,00 | 179,44 |
| 10957 | | OR | FKM | 80 | | | 77,00 | 3,00 | 210,10 |
| 13471 | | OR | FKM | 80 | | | 78,00 | 3,00 | 213,66 |
| 13473 | | OR | FKM | 80 | | | 79,00 | 3,00 | 186,27 |
| 13006 | | OR | FKM | 80 | | | 79,50 | 3,00 | 187,37 |
| 13477 | | OR | FKM | 80 | | | 80,00 | 3,00 | 195,65 |
| 25320 | | OR | FKM | 80 | | | 81,00 | 3,00 | 220,79 |
| 13480 | | OR | FKM | 80 | | | 82,00 | 3,00 | 196,75 |
| 12411 | | OR | FKM | 80 | | | 83,00 | 3,00 | 200,92 |
| 13483 | | OR | FKM | 80 | | | 84,00 | 3,00 | 205,19 |
| 13007 | | OR | FKM | 80 | | | 84,50 | 3,00 | 207,29 |
| 13486 | | OR | FKM | 80 | | | 85,00 | 3,00 | 210,10 |
| 12503 | | OR | FKM | 80 | | | 86,00 | 3,00 | 245,71 |
| 11401 | | OR | FKM | 80 | | | 86,50 | 3,00 | 694,41 |
| 26726 | | OR | FKM | 80 | | | 87,00 | 3,00 | 213,66 |
| 13489 | | OR | FKM | 80 | | | 88,00 | 3,00 | 217,23 |
| 26729 | | OR | FKM | 80 | | | 89,00 | 3,00 | 220,79 |
| 13492 | | OR | FKM | 80 | | | 90,00 | 3,00 | 220,79 |
| 23817 | | OR | FKM | 80 | | | 91,00 | 3,00 | 259,95 |
| 13496 | | OR | FKM | 80 | | | 92,00 | 3,00 | 231,48 |
| 13498 | | OR | FKM | 80 | | | 93,00 | 3,00 | 235,03 |
| 13501 | | OR | FKM | 80 | | | 94,00 | 3,00 | 238,59 |
| 13010 | | OR | FKM | 80 | | | 94,50 | 3,00 | 242,15 |
| 13503 | | OR | FKM | 80 | | | 95,00 | 3,00 | 242,15 |
| 12426 | | OR | FKM | 80 | | | 96,00 | 3,00 | 284,88 |

| CODICE | NUOVO CODICE | TIPO | MAT. | SH | RIFERIMENTI USA | RIFERIMENTI UK | d1 mm | d2 mm | LISTINO 5-2016 X 100 € |
|---|---|---|---|---|---|---|---|---|---|
| 38188 | | OR | FKM | 80 | | | 97,00 | 3,00 | 288,44 |
| 13508 | | OR | FKM | 80 | | | 98,00 | 3,00 | 252,84 |
| 13510 | | OR | FKM | 80 | | | 99,00 | 3,00 | 252,84 |
| 13011 | | OR | FKM | 80 | | | 99,50 | 3,00 | 256,39 |
| 9906 | | OR | FKM | 80 | | | 100,00 | 3,00 | 256,39 |
| 9643 | | OR | FKM | 80 | | | 101,00 | 3,00 | 808,34 |
| 12431 | | OR | FKM | 80 | | | 101,50 | 3,00 | 808,34 |
| 23815 | | OR | FKM | 80 | | | 102,00 | 3,00 | 299,13 |
| 9644 | | OR | FKM | 80 | | | 103,00 | 3,00 | 306,24 |
| 11167 | | OR | FKM | 80 | | | 104,00 | 3,00 | 306,24 |
| 13012 | | OR | FKM | 80 | | | 104,50 | 3,00 | 267,08 |
| 13518 | | OR | FKM | 80 | | | 105,00 | 3,00 | 267,08 |
| 9909 | | OR | FKM | 80 | | | 106,00 | 3,00 | 313,37 |
| 13968 | | OR | FKM | 80 | | | 107,00 | 3,00 | 316,93 |
| 13520 | | OR | FKM | 80 | | | 108,00 | 3,00 | 316,93 |
| 26738 | | OR | FKM | 80 | | | 109,00 | 3,00 | 320,49 |
| 13013 | | OR | FKM | 80 | | | 109,50 | 3,00 | 281,31 |
| 13521 | | OR | FKM | 80 | | | 110,00 | 3,00 | 281,31 |
| 11219 | | OR | FKM | 80 | | | 111,00 | 3,00 | 327,62 |
| 13524 | | OR | FKM | 80 | | | 112,00 | 3,00 | 331,18 |
| 24208 | | OR | FKM | 80 | | | 113,00 | 3,00 | 331,18 |
| 11232 | | OR | FKM | 80 | | | 114,00 | 3,00 | 334,74 |
| 13014 | | OR | FKM | 80 | | | 114,50 | 3,00 | 292,00 |
| 9917 | | OR | FKM | 80 | | | 115,00 | 3,00 | 292,00 |
| 11252 | | OR | FKM | 80 | | | 116,00 | 3,00 | 341,85 |
| 12133 | | OR | FKM | 80 | | | 117,00 | 3,00 | 345,42 |
| 9919 | | OR | FKM | 80 | | | 118,00 | 3,00 | 348,98 |
| 13532 | | OR | FKM | 80 | | | 119,00 | 3,00 | 348,98 |
| 13015 | | OR | FKM | 80 | | | 119,50 | 3,00 | 306,24 |
| 13534 | | OR | FKM | 80 | | | 120,00 | 3,00 | 306,24 |
| 9923 | | OR | FKM | 80 | | | 122,00 | 3,00 | 359,67 |
| 13802 | | OR | FKM | 80 | | | 123,00 | 3,00 | 363,23 |
| 13652 | | OR | FKM | 80 | | | 124,00 | 3,00 | 363,23 |
| 13016 | | OR | FKM | 80 | | | 124,50 | 3,00 | 316,93 |
| 13538 | | OR | FKM | 80 | | | 125,00 | 3,00 | 316,93 |
| 13803 | | OR | FKM | 80 | | | 126,00 | 3,00 | 370,35 |
| 25499 | | OR | FKM | 80 | | | 127,00 | 3,00 | 381,03 |
| 13542 | | OR | FKM | 80 | | | 128,00 | 3,00 | 384,59 |
| 13804 | | OR | FKM | 80 | | | 129,00 | 3,00 | 395,28 |
| 13017 | | OR | FKM | 80 | | | 129,50 | 3,00 | 345,42 |
| 13543 | | OR | FKM | 80 | | | 130,00 | 3,00 | 345,42 |
| 13546 | | OR | FKM | 80 | | | 132,00 | 3,00 | 420,20 |
| 66639 | | OR | FKM | 80 | | | 133,00 | 3,00 | 423,77 |
| 13549 | | OR | FKM | 80 | | | 134,00 | 3,00 | 445,13 |
| 13862 | | OR | FKM | 80 | | | 134,50 | 3,00 | 388,15 |
| 13550 | | OR | FKM | 80 | | | 135,00 | 3,00 | 388,15 |
| 13805 | | OR | FKM | 80 | | | 136,00 | 3,00 | 452,24 |
| 13553 | | OR | FKM | 80 | | | 137,00 | 3,00 | 462,93 |
| 13806 | | OR | FKM | 80 | | | 138,00 | 3,00 | 462,93 |

| CODICE | NUOVO CODICE | TIPO | MAT. | SH | RIFERIMENTI USA | RIFERIMENTI UK | d1 mm | d2 mm | LISTINO 5-2016 X 100 € |
|---|---|---|---|---|---|---|---|---|---|
| 13554 | | OR | FKM | 80 | | | 139,00 | 3,00 | 477,18 |
| 13018 | | OR | FKM | 80 | | | 139,50 | 3,00 | 416,64 |
| 13558 | | OR | FKM | 80 | | | 140,00 | 3,00 | 416,64 |
| 9936 | | OR | FKM | 80 | | | 142,00 | 3,00 | 487,85 |
| 25516 | | OR | FKM | 80 | | | 143,00 | 3,00 | 491,42 |
| 13563 | | OR | FKM | 80 | | | 144,00 | 3,00 | 494,98 |
| 13019 | | OR | FKM | 80 | | | 144,50 | 3,00 | 430,88 |
| 13564 | | OR | FKM | 80 | | | 145,00 | 3,00 | 430,88 |
| 12452 | | OR | FKM | 80 | | | 146,00 | 3,00 | 502,10 |
| 25532 | | OR | FKM | 80 | | | 147,00 | 3,00 | 505,67 |
| 66641 | | OR | FKM | 80 | | | 148,00 | 3,00 | 505,67 |
| 13692 | | OR | FKM | 80 | | | 149,00 | 3,00 | 505,67 |
| 13936 | | OR | FKM | 80 | | | 149,50 | 3,00 | 438,00 |
| 13567 | | OR | FKM | 80 | | | 150,00 | 3,00 | 438,00 |
| 9688 | | OR | FKM | 80 | | | 152,00 | 3,00 | 443,20 |
| 66643 | | OR | FKM | 80 | | | 153,00 | 3,00 | 461,46 |
| 13717 | | OR | FKM | 80 | | | 154,00 | 3,00 | 462,33 |
| 13937 | | OR | FKM | 80 | | | 154,50 | 3,00 | 460,56 |
| 13571 | | OR | FKM | 80 | | | 155,00 | 3,00 | 460,56 |
| 13573 | | OR | FKM | 80 | | | 156,00 | 3,00 | 474,79 |
| 11430 | | OR | FKM | 80 | | | 157,00 | 3,00 | 478,84 |
| 66647 | | OR | FKM | 80 | | | 158,00 | 3,00 | 506,90 |
| 13951 | | OR | FKM | 80 | | | 159,00 | 3,00 | 506,90 |
| 13938 | | OR | FKM | 80 | | | 159,50 | 3,00 | 520,27 |
| 13575 | | OR | FKM | 80 | | | 160,00 | 3,00 | 520,27 |
| 26774 | | OR | FKM | 80 | | | 162,00 | 3,00 | 531,56 |
| 13579 | | OR | FKM | 80 | | | 164,00 | 3,00 | 540,08 |
| 13939 | | OR | FKM | 80 | | | 164,50 | 3,00 | 545,08 |
| 23992 | | OR | FKM | 80 | | | 165,00 | 3,00 | 545,08 |
| 66651 | | OR | FKM | 80 | | | 167,00 | 3,00 | 559,26 |
| 26777 | | OR | FKM | 80 | | | 168,00 | 3,00 | 557,80 |
| 13719 | | OR | FKM | 80 | | | 169,50 | 3,00 | 596,59 |
| 13584 | | OR | FKM | 80 | | | 170,00 | 3,00 | 596,59 |
| 66652 | | OR | FKM | 80 | | | 171,00 | 3,00 | 596,59 |
| 20947 | | OR | FKM | 80 | | | 172,00 | 3,00 | 628,81 |
| 13588 | | OR | FKM | 80 | | | 174,00 | 3,00 | 528,30 |
| 13940 | | OR | FKM | 80 | | | 174,50 | 3,00 | 528,30 |
| 9707 | | OR | FKM | 80 | | | 175,00 | 3,00 | 576,26 |
| 13808 | | OR | FKM | 80 | | | 177,00 | 3,00 | 578,24 |
| 66654 | | OR | FKM | 80 | | | 178,00 | 3,00 | 649,47 |
| 13592 | | OR | FKM | 80 | | | 179,00 | 3,00 | 747,38 |
| 13941 | | OR | FKM | 80 | | | 179,50 | 3,00 | 747,38 |
| 13593 | | OR | FKM | 80 | | | 180,00 | 3,00 | 747,38 |
| JAPANESE STANDARD JIS 240 P+G | | | | | | | | | |
| 25126 | | OR | FKM | 80 | | | 24,40 | 3,10 | 72,22 |
| 25160 | | OR | FKM | 80 | | | 29,40 | 3,10 | 85,87 |
| 25201 | | OR | FKM | 80 | | | 34,40 | 3,10 | 103,00 |
| 25224 | | OR | FKM | 80 | | | 39,40 | 3,10 | 119,13 |
| 26691 | | OR | FKM | 80 | | | 44,40 | 3,10 | 132,71 |

| CODICE | NUOVO CODICE | TIPO | MAT. | SH | RIFERIMENTI USA | RIFERIMENTI UK | d1 mm | d2 mm | LISTINO 5-2016 X 100 € |
|---|---|---|---|---|---|---|---|---|---|
| 25254 | | OR | FKM | 80 | | | 49,40 | 3,10 | 148,60 |
| 65710 | | OR | FKM | 80 | | | 54,40 | 3,10 | 167,58 |
| 25280 | | OR | FKM | 80 | | | 59,40 | 3,10 | 184,17 |
| 25289 | | OR | FKM | 80 | | | 64,40 | 3,10 | 214,80 |
| 25299 | | OR | FKM | 80 | | | 69,40 | 3,10 | 224,67 |
| 26717 | | OR | FKM | 80 | | | 74,40 | 3,10 | 245,43 |
| 25315 | | OR | FKM | 80 | | | 79,40 | 3,10 | 264,41 |
| 25327 | | OR | FKM | 80 | | | 84,40 | 3,10 | 279,14 |
| 25334 | | OR | FKM | 80 | | | 89,40 | 3,10 | 294,19 |
| 25339 | | OR | FKM | 80 | | | 94,40 | 3,10 | 305,76 |
| 65763 | | OR | FKM | 80 | | | 99,40 | 3,10 | 324,59 |
| 25470 | | OR | FKM | 80 | | | 104,40 | 3,10 | 352,75 |
| 25474 | | OR | FKM | 80 | | | 109,40 | 3,10 | 363,88 |
| 65779 | | OR | FKM | 80 | | | 114,40 | 3,10 | 393,41 |
| 65783 | | OR | FKM | 80 | | | 119,40 | 3,10 | 402,44 |
| 65789 | | OR | FKM | 80 | | | 124,40 | 3,10 | 421,49 |
| 25503 | | OR | FKM | 80 | | | 129,40 | 3,10 | 427,67 |
| 65793 | | OR | FKM | 80 | | | 134,40 | 3,10 | 439,39 |
| 25513 | | OR | FKM | 80 | | | 139,40 | 3,10 | 446,34 |
| 25518 | | OR | FKM | 80 | | | 144,40 | 3,10 | 504,43 |
| | | | | FRENCH STANDARD R | | | | | |
| 13226 | | OR | FKM | 80 | | | 18,30 | 3,60 | 53,16 |
| 13697 | | OR | FKM | 80 | | | 19,80 | 3,60 | 59,49 |
| 13705 | | OR | FKM | 80 | | | 21,30 | 3,60 | 66,43 |
| 13790 | | OR | FKM | 80 | | | 23,00 | 3,60 | 68,13 |
| 13696 | | OR | FKM | 80 | | | 24,60 | 3,60 | 72,83 |
| 13275 | | OR | FKM | 80 | | | 26,20 | 3,60 | 88,19 |
| 13881 | | OR | FKM | 80 | | | 27,80 | 3,60 | 93,20 |
| 13850 | | OR | FKM | 80 | | | 29,30 | 3,60 | 94,51 |
| 13879 | | OR | FKM | 80 | | | 30,80 | 3,60 | 99,51 |
| 13706 | | OR | FKM | 80 | | | 32,50 | 3,60 | 100,65 |
| 13906 | | OR | FKM | 80 | | | 34,10 | 3,60 | 100,76 |
| 13953 | | OR | FKM | 80 | | | 35,60 | 3,60 | 105,32 |
| 13334 | | OR | FKM | 80 | | | 37,30 | 3,60 | 109,48 |
| | | | | METRIC STANDARD | | | | | |
| 12221 | | OR | FKM | 80 | | | 4,00 | 4,00 | 40,95 |
| 12052 | | OR | FKM | 80 | | | 5,00 | 4,00 | 44,51 |
| 10103 | | OR | FKM | 80 | | | 6,00 | 4,00 | 47,36 |
| 10116 | | OR | FKM | 80 | | | 7,00 | 4,00 | 50,21 |
| 12232 | | OR | FKM | 80 | | | 8,00 | 4,00 | 50,92 |
| 13166 | | OR | FKM | 80 | | | 9,00 | 4,00 | 57,69 |
| 13174 | | OR | FKM | 80 | | | 10,00 | 4,00 | 59,47 |
| 12249 | | OR | FKM | 80 | | | 11,00 | 4,00 | 64,10 |
| 13186 | | OR | FKM | 80 | | | 12,00 | 4,00 | 59,11 |
| 13194 | | OR | FKM | 80 | | | 13,00 | 4,00 | 72,29 |
| 13200 | | OR | FKM | 80 | | | 14,00 | 4,00 | 76,56 |
| 13957 | | OR | FKM | 80 | | | 15,00 | 4,00 | 70,15 |
| 13213 | | OR | FKM | 80 | | | 16,00 | 4,00 | 85,12 |
| 12198 | | OR | FKM | 80 | | | 17,00 | 4,00 | 89,38 |

| CODICE | NUOVO CODICE | TIPO | MAT. | SH | RIFERIMENTI USA | RIFERIMENTI UK | d1 mm | d2 mm | LISTINO 5-2016 X 100 € |
|---|---|---|---|---|---|---|---|---|---|
| 194630 | | OR | FKM | 80 | | | 18,00 | 4,00 | 79,41 |
| 13232 | | OR | FKM | 80 | | | 19,00 | 4,00 | 93,66 |
| 13240 | | OR | FKM | 80 | | | 20,00 | 4,00 | 96,85 |
| 12299 | | OR | FKM | 80 | | | 21,00 | 4,00 | 99,70 |
| 13252 | | OR | FKM | 80 | | | 22,00 | 4,00 | 89,03 |
| 12191 | | OR | FKM | 80 | | | 23,00 | 4,00 | 99,70 |
| 13261 | | OR | FKM | 80 | | | 24,00 | 4,00 | 94,36 |
| 13268 | | OR | FKM | 80 | | | 25,00 | 4,00 | 96,14 |
| 12315 | | OR | FKM | 80 | | | 26,00 | 4,00 | 115,73 |
| 12318 | | OR | FKM | 80 | | | 27,00 | 4,00 | 117,51 |
| 13286 | | OR | FKM | 80 | | | 28,00 | 4,00 | 106,83 |
| 67242 | | OR | FKM | 80 | | | 29,00 | 4,00 | 124,64 |
| 13296 | | OR | FKM | 80 | | | 30,00 | 4,00 | 110,39 |
| 12327 | | OR | FKM | 80 | | | 31,00 | 4,00 | 131,75 |
| 13308 | | OR | FKM | 80 | | | 32,00 | 4,00 | 134,43 |
| 10471 | | OR | FKM | 80 | | | 33,00 | 4,00 | 137,10 |
| 13316 | | OR | FKM | 80 | | | 34,00 | 4,00 | 144,21 |
| 13321 | | OR | FKM | 80 | | | 35,00 | 4,00 | 128,19 |
| 13328 | | OR | FKM | 80 | | | 36,00 | 4,00 | 131,75 |
| 12344 | | OR | FKM | 80 | | | 37,00 | 4,00 | 156,69 |
| 13338 | | OR | FKM | 80 | | | 38,00 | 4,00 | 138,88 |
| 10548 | | OR | FKM | 80 | | | 39,00 | 4,00 | 163,80 |
| 13349 | | OR | FKM | 80 | | | 40,00 | 4,00 | 142,44 |
| 10575 | | OR | FKM | 80 | | | 41,00 | 4,00 | 170,93 |
| 13359 | | OR | FKM | 80 | | | 42,00 | 4,00 | 149,56 |
| 13365 | | OR | FKM | 80 | | | 43,00 | 4,00 | 178,05 |
| 13369 | | OR | FKM | 80 | | | 44,00 | 4,00 | 156,69 |
| 13375 | | OR | FKM | 80 | | | 45,00 | 4,00 | 185,18 |
| 12199 | | OR | FKM | 80 | | | 46,00 | 4,00 | 163,80 |
| 12361 | | OR | FKM | 80 | | | 47,00 | 4,00 | 192,30 |
| 13386 | | OR | FKM | 80 | | | 48,00 | 4,00 | 170,93 |
| 13389 | | OR | FKM | 80 | | | 49,00 | 4,00 | 199,41 |
| 13394 | | OR | FKM | 80 | | | 50,00 | 4,00 | 174,49 |
| 12366 | | OR | FKM | 80 | | | 51,00 | 4,00 | 202,98 |
| 13400 | | OR | FKM | 80 | | | 52,00 | 4,00 | 181,61 |
| 13676 | | OR | FKM | 80 | | | 53,00 | 4,00 | 185,18 |
| 13405 | | OR | FKM | 80 | | | 54,00 | 4,00 | 188,74 |
| 13411 | | OR | FKM | 80 | | | 55,00 | 4,00 | 192,30 |
| 12371 | | OR | FKM | 80 | | | 56,00 | 4,00 | 220,79 |
| 10763 | | OR | FKM | 80 | | | 57,00 | 4,00 | 195,86 |
| 13424 | | OR | FKM | 80 | | | 58,00 | 4,00 | 202,98 |
| 13426 | | OR | FKM | 80 | | | 59,00 | 4,00 | 238,59 |
| 10004 | | OR | FKM | 80 | | | 60,00 | 4,00 | 210,10 |
| 10816 | | OR | FKM | 80 | | | 61,00 | 4,00 | 245,71 |
| 12382 | | OR | FKM | 80 | | | 62,00 | 4,00 | 217,23 |
| 12385 | | OR | FKM | 80 | | | 63,00 | 4,00 | 220,79 |
| 13436 | | OR | FKM | 80 | | | 64,00 | 4,00 | 224,35 |
| 13441 | | OR | FKM | 80 | | | 65,00 | 4,00 | 227,91 |
| 13444 | | OR | FKM | 80 | | | 66,00 | 4,00 | 267,08 |

| CODICE | NUOVO CODICE | TIPO | MAT. | SH | RIFERIMENTI USA | RIFERIMENTI UK | d1 mm | d2 mm | LISTINO 5-2016 X 100 € |
|---|---|---|---|---|---|---|---|---|---|
| 13447 | | OR | FKM | 80 | | | 67,00 | 4,00 | 235,03 |
| 13450 | | OR | FKM | 80 | | | 68,00 | 4,00 | 238,59 |
| 10886 | | OR | FKM | 80 | | | 69,00 | 4,00 | 284,88 |
| 13456 | | OR | FKM | 80 | | | 70,00 | 4,00 | 249,28 |
| 10910 | | OR | FKM | 80 | | | 71,00 | 4,00 | 292,00 |
| 13458 | | OR | FKM | 80 | | | 72,00 | 4,00 | 259,95 |
| 13678 | | OR | FKM | 80 | | | 73,00 | 4,00 | 302,69 |
| 12401 | | OR | FKM | 80 | | | 74,00 | 4,00 | 309,80 |
| 13465 | | OR | FKM | 80 | | | 75,00 | 4,00 | 270,63 |
| 12407 | | OR | FKM | 80 | | | 76,00 | 4,00 | 316,93 |
| 10959 | | OR | FKM | 80 | | | 77,00 | 4,00 | 324,05 |
| 13472 | 196349 | OR | FKM | 80 | | | 78,00 | 4,00 | 284,88 |
| 67243 | | OR | FKM | 80 | | | 79,00 | 4,00 | 338,30 |
| 13478 | | OR | FKM | 80 | | | 80,00 | 4,00 | 295,56 |
| 13836 | | OR | FKM | 80 | | | 81,00 | 4,00 | 345,42 |
| 13482 | | OR | FKM | 80 | | | 82,00 | 4,00 | 302,69 |
| 66117 | | OR | FKM | 80 | | | 83,00 | 4,00 | 352,54 |
| 11015 | | OR | FKM | 80 | | | 84,00 | 4,00 | 309,80 |
| 10011 | | OR | FKM | 80 | | | 85,00 | 4,00 | 313,37 |
| 12414 | | OR | FKM | 80 | | | 86,00 | 4,00 | 366,79 |
| 12415 | | OR | FKM | 80 | | | 87,00 | 4,00 | 370,35 |
| 12416 | | OR | FKM | 80 | | | 88,00 | 4,00 | 324,05 |
| 11063 | | OR | FKM | 80 | | | 89,00 | 4,00 | 377,47 |
| 13494 | | OR | FKM | 80 | | | 90,00 | 4,00 | 331,18 |
| 13837 | | OR | FKM | 80 | | | 91,00 | 4,00 | 388,15 |
| 13497 | | OR | FKM | 80 | | | 92,00 | 4,00 | 338,30 |
| 12419 | | OR | FKM | 80 | | | 93,00 | 4,00 | 395,28 |
| 12421 | | OR | FKM | 80 | | | 94,00 | 4,00 | 345,42 |
| 13505 | | OR | FKM | 80 | | | 95,00 | 4,00 | 402,40 |
| 13507 | | OR | FKM | 80 | | | 96,00 | 4,00 | 405,97 |
| 22831 | | OR | FKM | 80 | | | 97,00 | 4,00 | 409,53 |
| 12428 | | OR | FKM | 80 | | | 98,00 | 4,00 | 356,10 |
| 25347 | | OR | FKM | 80 | | | 99,00 | 4,00 | 413,08 |
| 13513 | | OR | FKM | 80 | | | 100,00 | 4,00 | 359,67 |
| 67244 | | OR | FKM | 80 | | | 101,00 | 4,00 | 416,64 |
| 13516 | | OR | FKM | 80 | | | 102,00 | 4,00 | 420,20 |
| 13994 | | OR | FKM | 80 | | | 103,00 | 4,00 | 427,33 |
| 13517 | | OR | FKM | 80 | | | 104,00 | 4,00 | 434,44 |
| 9907 | | OR | FKM | 80 | | | 105,00 | 4,00 | 373,92 |
| 23972 | | OR | FKM | 80 | | | 106,00 | 4,00 | 438,00 |
| 9646 | | OR | FKM | 80 | | | 107,00 | 4,00 | 441,57 |
| 9862 | | OR | FKM | 80 | | | 108,00 | 4,00 | 445,13 |
| 11210 | | OR | FKM | 80 | | | 109,00 | 4,00 | 448,68 |
| 13522 | | OR | FKM | 80 | | | 110,00 | 4,00 | 391,72 |
| 67245 | | OR | FKM | 80 | | | 111,00 | 4,00 | 455,80 |
| 9915 | | OR | FKM | 80 | | | 112,00 | 4,00 | 462,93 |
| 12436 | | OR | FKM | 80 | | | 113,00 | 4,00 | 466,49 |
| 12437 | | OR | FKM | 80 | | | 114,00 | 4,00 | 470,05 |
| 13526 | | OR | FKM | 80 | | | 115,00 | 4,00 | 413,08 |

| CODICE | NUOVO CODICE | TIPO | MAT. | SH | RIFERIMENTI USA | RIFERIMENTI UK | d1 mm | d2 mm | LISTINO 5-2016 X 100 € |
|---|---|---|---|---|---|---|---|---|---|
| 9652 | | OR | FKM | 80 | | | 116,00 | 4,00 | 477,18 |
| 9653 | | OR | FKM | 80 | | | 117,00 | 4,00 | 480,74 |
| 13531 | | OR | FKM | 80 | | | 118,00 | 4,00 | 484,29 |
| 11263 | | OR | FKM | 80 | | | 119,00 | 4,00 | 487,85 |
| 9921 | | OR | FKM | 80 | | | 120,00 | 4,00 | 427,33 |
| 25493 | | OR | FKM | 80 | | | 121,00 | 4,00 | 498,54 |
| 9924 | | OR | FKM | 80 | | | 122,00 | 4,00 | 502,10 |
| 67246 | | OR | FKM | 80 | | | 123,00 | 4,00 | 505,67 |
| 12444 | | OR | FKM | 80 | | | 124,00 | 4,00 | 509,23 |
| 13539 | | OR | FKM | 80 | | | 125,00 | 4,00 | 512,79 |
| 13541 | | OR | FKM | 80 | | | 126,00 | 4,00 | 516,35 |
| 9663 | | OR | FKM | 80 | | | 127,00 | 4,00 | 537,72 |
| 13838 | | OR | FKM | 80 | | | 128,00 | 4,00 | 541,28 |
| 9928 | | OR | FKM | 80 | | | 129,00 | 4,00 | 544,84 |
| 13545 | | OR | FKM | 80 | | | 130,00 | 4,00 | 487,85 |
| 11323 | | OR | FKM | 80 | | | 131,00 | 4,00 | 566,20 |
| 9932 | | OR | FKM | 80 | | | 132,00 | 4,00 | 573,33 |
| 11331 | | OR | FKM | 80 | | | 133,00 | 4,00 | 576,89 |
| 23985 | | OR | FKM | 80 | | | 134,00 | 4,00 | 584,02 |
| 9671 | | OR | FKM | 80 | | | 135,00 | 4,00 | 505,67 |
| 9673 | | OR | FKM | 80 | | | 136,00 | 4,00 | 587,57 |
| 13839 | | OR | FKM | 80 | | | 137,00 | 4,00 | 591,13 |
| 23824 | | OR | FKM | 80 | | | 138,00 | 4,00 | 594,69 |
| 11361 | | OR | FKM | 80 | | | 139,00 | 4,00 | 598,26 |
| 13559 | | OR | FKM | 80 | | | 140,00 | 4,00 | 523,47 |
| 67247 | | OR | FKM | 80 | | | 141,00 | 4,00 | 608,93 |
| 13561 | | OR | FKM | 80 | | | 142,00 | 4,00 | 612,49 |
| 11375 | | OR | FKM | 80 | | | 143,00 | 4,00 | 616,06 |
| 9937 | | OR | FKM | 80 | | | 144,00 | 4,00 | 537,72 |
| 9679 | | OR | FKM | 80 | | | 145,00 | 4,00 | 626,73 |
| 9939 | | OR | FKM | 80 | | | 146,00 | 4,00 | 630,29 |
| 67248 | | OR | FKM | 80 | | | 147,00 | 4,00 | 633,86 |
| 11393 | | OR | FKM | 80 | | | 148,00 | 4,00 | 637,42 |
| 25526 | | OR | FKM | 80 | | | 149,00 | 4,00 | 644,54 |
| 13568 | | OR | FKM | 80 | | | 150,00 | 4,00 | 559,08 |
| 67250 | | OR | FKM | 80 | | | 152,00 | 4,00 | 622,49 |
| 12146 | | OR | FKM | 80 | | | 153,00 | 4,00 | 629,89 |
| 26769 | | OR | FKM | 80 | | | 154,00 | 4,00 | 711,54 |
| 13572 | | OR | FKM | 80 | | | 155,00 | 4,00 | 644,90 |
| 23989 | | OR | FKM | 80 | | | 158,00 | 4,00 | 715,80 |
| 12462 | | OR | FKM | 80 | | | 159,00 | 4,00 | 709,82 |
| 13576 | | OR | FKM | 80 | | | 160,00 | 4,00 | 751,96 |
| 12464 | | OR | FKM | 80 | | | 162,00 | 4,00 | 839,73 |
| 11452 | | OR | FKM | 80 | | | 163,00 | 4,00 | 840,59 |
| 12466 | | OR | FKM | 80 | | | 164,00 | 4,00 | 875,53 |
| 13581 | | OR | FKM | 80 | | | 165,00 | 4,00 | 909,87 |
| 12468 | | OR | FKM | 80 | | | 166,00 | 4,00 | 920,97 |
| 11468 | | OR | FKM | 80 | | | 168,00 | 4,00 | 926,04 |
| 13585 | | OR | FKM | 80 | | | 170,00 | 4,00 | 940,23 |

| CODICE | NUOVO CODICE | TIPO | MAT. | SH | RIFERIMENTI USA | RIFERIMENTI UK | d1 mm | d2 mm | LISTINO 5-2016 X 100 € |
|---|---|---|---|---|---|---|---|---|---|
| 13656 | | OR | FKM | 80 | | | 172,00 | 4,00 | 955,26 |
| 25543 | | OR | FKM | 80 | | | 173,00 | 4,00 | 976,21 |
| 13841 | | OR | FKM | 80 | | | 174,00 | 4,00 | 988,70 |
| 9947 | | OR | FKM | 80 | | | 175,00 | 4,00 | 999,89 |
| 12194 | | OR | FKM | 80 | | | 177,00 | 4,00 | 976,06 |
| 67256 | | OR | FKM | 80 | | | 178,00 | 4,00 | 976,06 |
| 9860 | | OR | FKM | 80 | | | 180,00 | 4,00 | 1.025,03 |
| 9712 | | OR | FKM | 80 | | | 182,00 | 4,00 | 1.050,11 |
| 23829 | | OR | FKM | 80 | | | 183,00 | 4,00 | 1.049,91 |
| 67259 | | OR | FKM | 80 | | | 184,00 | 4,00 | 1.071,48 |
| 9951 | | OR | FKM | 80 | | | 185,00 | 4,00 | 1.100,06 |
| 26796 | | OR | FKM | 80 | | | 186,00 | 4,00 | 1.142,13 |
| 11527 | | OR | FKM | 80 | | | 187,00 | 4,00 | 1.142,13 |
| 9869 | | OR | FKM | 80 | | | 188,00 | 4,00 | 1.147,37 |
| 9722 | | OR | FKM | 80 | | | 190,00 | 4,00 | 1.155,12 |
| 9958 | | OR | FKM | 80 | | | 192,00 | 4,00 | 1.160,44 |
| 9725 | | OR | FKM | 80 | | | 195,00 | 4,00 | 1.264,93 |
| 23705 | | OR | FKM | 80 | | | 196,00 | 4,00 | 1.350,20 |
| 11557 | | OR | FKM | 80 | | | 198,00 | 4,00 | 1.361,20 |
| 13627 | | OR | FKM | 80 | | | 200,00 | 4,00 | 1.395,06 |
| 10129 | | OR | FKM | 80 | | | 8,00 | 4,50 | 114,69 |
| 67458 | | OR | FKM | 80 | | | 9,50 | 4,50 | 115,50 |
| 10153 | | OR | FKM | 80 | | | 10,00 | 4,50 | 115,47 |
| 10186 | | OR | FKM | 80 | | | 12,00 | 4,50 | 115,96 |
| 12262 | | OR | FKM | 80 | | | 13,00 | 4,50 | 130,08 |
| 67476 | | OR | FKM | 80 | | | 15,00 | 4,50 | 153,08 |
| 10231 | | OR | FKM | 80 | | | 15,50 | 4,50 | 153,31 |
| 12277 | | OR | FKM | 80 | | | 16,00 | 4,50 | 154,15 |
| 12280 | | OR | FKM | 80 | | | 17,00 | 4,50 | 159,87 |
| 12288 | | OR | FKM | 80 | | | 18,00 | 4,50 | 160,37 |
| 10283 | | OR | FKM | 80 | | | 20,00 | 4,50 | 164,64 |
| 67478 | | OR | FKM | 80 | | | 21,50 | 4,50 | 168,15 |
| 12304 | | OR | FKM | 80 | | | 22,00 | 4,50 | 183,57 |
| 67480 | | OR | FKM | 80 | | | 24,00 | 4,50 | 187,13 |
| 10359 | | OR | FKM | 80 | | | 25,00 | 4,50 | 189,34 |
| 65839 | | OR | FKM | 80 | | | 26,00 | 4,50 | 193,27 |
| 10391 | | OR | FKM | 80 | | | 27,00 | 4,50 | 199,37 |
| 26672 | | OR | FKM | 80 | | | 28,00 | 4,50 | 206,08 |
| 67484 | | OR | FKM | 80 | | | 29,00 | 4,50 | 212,51 |
| 10425 | | OR | FKM | 80 | | | 29,50 | 4,50 | 217,64 |
| 10433 | | OR | FKM | 80 | | | 30,00 | 4,50 | 219,69 |
| 13303 | | OR | FKM | 80 | | | 31,00 | 4,50 | 231,14 |
| 12330 | | OR | FKM | 80 | | | 32,00 | 4,50 | 232,62 |
| 10498 | | OR | FKM | 80 | | | 35,00 | 4,50 | 233,89 |
| 10512 | | OR | FKM | 80 | | | 36,00 | 4,50 | 235,28 |
| 67489 | | OR | FKM | 80 | | | 37,00 | 4,50 | 236,67 |
| 12346 | | OR | FKM | 80 | | | 38,00 | 4,50 | 238,17 |
| 12348 | | OR | FKM | 80 | | | 40,00 | 4,50 | 238,17 |
| 12090 | | OR | FKM | 80 | | | 41,00 | 4,50 | 238,17 |

| CODICE | NUOVO CODICE | TIPO | MAT. | SH | RIFERIMENTI USA | RIFERIMENTI UK | d1 mm | d2 mm | LISTINO 5-2016 X 100 € |
|---|---|---|---|---|---|---|---|---|---|
| 10588 | | OR | FKM | 80 | | | 42,00 | 4,50 | 238,17 |
| 12043 | | OR | FKM | 80 | | | 44,00 | 4,50 | 248,82 |
| 10620 | | OR | FKM | 80 | | | 45,00 | 4,50 | 248,82 |
| 10650 | | OR | FKM | 80 | | | 48,00 | 4,50 | 251,14 |
| 67494 | | OR | FKM | 80 | | | 49,00 | 4,50 | 252,29 |
| 10673 | | OR | FKM | 80 | | | 50,00 | 4,50 | 254,03 |
| 10698 | | OR | FKM | 80 | | | 51,00 | 4,50 | 255,53 |
| 10723 | | OR | FKM | 80 | | | 53,00 | 4,50 | 259,24 |
| 10753 | | OR | FKM | 80 | | | 56,00 | 4,50 | 312,47 |
| 10800 | | OR | FKM | 80 | | | 60,00 | 4,50 | 318,26 |
| 26704 | | OR | FKM | 80 | | | 61,00 | 4,50 | 322,35 |
| 10832 | | OR | FKM | 80 | | | 63,00 | 4,50 | 326,94 |
| 66108 | | OR | FKM | 80 | | | 64,00 | 4,50 | 330,53 |
| 10847 | | OR | FKM | 80 | | | 65,00 | 4,50 | 337,40 |
| 66111 | | OR | FKM | 80 | | | 66,00 | 4,50 | 341,27 |
| 10887 | | OR | FKM | 80 | | | 69,00 | 4,50 | 343,98 |
| 10897 | | OR | FKM | 80 | | | 70,00 | 4,50 | 346,93 |
| 26712 | | OR | FKM | 80 | | | 71,00 | 4,50 | 354,13 |
| 10923 | | OR | FKM | 80 | | | 73,00 | 4,50 | 361,72 |
| 10930 | | OR | FKM | 80 | | | 74,00 | 4,50 | 379,52 |
| 10937 | | OR | FKM | 80 | | | 75,00 | 4,50 | 410,85 |
| 10945 | | OR | FKM | 80 | | | 76,00 | 4,50 | 422,42 |
| 10981 | | OR | FKM | 80 | | | 80,00 | 4,50 | 430,52 |
| 11010 | | OR | FKM | 80 | | | 83,00 | 4,50 | 446,72 |
| 11018 | | OR | FKM | 80 | | | 85,00 | 4,50 | 458,22 |
| 11033 | | OR | FKM | 80 | | | 86,00 | 4,50 | 464,08 |
| 11064 | | OR | FKM | 80 | | | 89,00 | 4,50 | 474,34 |
| 12035 | | OR | FKM | 80 | | | 90,00 | 4,50 | 480,28 |
| 11086 | | OR | FKM | 80 | | | 92,00 | 4,50 | 482,60 |
| 12423 | | OR | FKM | 80 | | | 95,00 | 4,50 | 488,39 |
| 9639 | | OR | FKM | 80 | | | 100,00 | 4,50 | 548,80 |
| 11154 | | OR | FKM | 80 | | | 101,00 | 4,50 | 598,48 |
| 11178 | | OR | FKM | 80 | | | 105,00 | 4,50 | 607,59 |
| 12122 | | OR | FKM | 80 | | | 106,00 | 4,50 | 611,06 |
| 9912 | | OR | FKM | 80 | | | 110,00 | 4,50 | 613,38 |
| 12441 | | OR | FKM | 80 | | | 115,00 | 4,50 | 619,16 |
| 11269 | | OR | FKM | 80 | | | 120,00 | 4,50 | 722,70 |
| 11279 | | OR | FKM | 80 | | | 122,00 | 4,50 | 739,52 |
| 11292 | | OR | FKM | 80 | | | 124,00 | 4,50 | 748,78 |
| 12446 | | OR | FKM | 80 | | | 126,00 | 4,50 | 767,84 |
| 9666 | | OR | FKM | 80 | | | 130,00 | 4,50 | 827,48 |
| 11367 | | OR | FKM | 80 | | | 140,00 | 4,50 | 832,11 |
| 12456 | | OR | FKM | 80 | | | 150,00 | 4,50 | 835,35 |
| 11458 | | OR | FKM | 80 | | | 165,00 | 4,50 | 1.455,13 |
| 11510 | | OR | FKM | 80 | | | 180,00 | 4,50 | 1.601,72 |
| 11634 | | OR | FKM | 80 | | | 218,50 | 4,50 | 1.683,50 |
| 11700 | | OR | FKM | 80 | | | 250,00 | 4,50 | 1.766,91 |
| 11730 | | OR | FKM | 80 | | | 267,00 | 4,50 | 2.464,69 |
| 12172 | | OR | FKM | 80 | | | 280,00 | 4,50 | 3.240,94 |

| CODICE | NUOVO CODICE | TIPO | MAT. | SH | RIFERIMENTI USA | RIFERIMENTI UK | d1 mm | d2 mm | LISTINO 5-2016 X 100 € |
|---|---|---|---|---|---|---|---|---|---|
| 11800 | | OR | FKM | 80 | | | 315,00 | 4,50 | 3.453,42 |
| 10081 | | OR | FKM | 80 | | | 4,00 | 5,00 | 65,89 |
| 12223 | | OR | FKM | 80 | | | 5,00 | 5,00 | 73,00 |
| 24956 | | OR | FKM | 80 | | | 6,00 | 5,00 | 74,79 |
| 10117 | | OR | FKM | 80 | | | 7,00 | 5,00 | 81,90 |
| 12233 | | OR | FKM | 80 | | | 8,00 | 5,00 | 85,46 |
| 10139 | | OR | FKM | 80 | | | 9,00 | 5,00 | 89,03 |
| 12244 | | OR | FKM | 80 | | | 10,00 | 5,00 | 92,59 |
| 12250 | | OR | FKM | 80 | | | 11,00 | 5,00 | 96,14 |
| 12259 | | OR | FKM | 80 | | | 12,00 | 5,00 | 103,26 |
| 12263 | | OR | FKM | 80 | | | 13,00 | 5,00 | 106,83 |
| 10212 | | OR | FKM | 80 | | | 14,00 | 5,00 | 113,95 |
| 13205 | | OR | FKM | 80 | | | 15,00 | 5,00 | 106,83 |
| 13214 | | OR | FKM | 80 | | | 16,00 | 5,00 | 128,19 |
| 12281 | | OR | FKM | 80 | | | 17,00 | 5,00 | 135,31 |
| 12289 | | OR | FKM | 80 | | | 18,00 | 5,00 | 138,88 |
| 194434 | | OR | FKM | 80 | | | 19,00 | 5,00 | 142,44 |
| 13241 | | OR | FKM | 80 | | | 20,00 | 5,00 | 124,64 |
| 13704 | | OR | FKM | 80 | | | 21,00 | 5,00 | 149,56 |
| 12305 | | OR | FKM | 80 | | | 22,00 | 5,00 | 153,13 |
| 12307 | | OR | FKM | 80 | | | 23,00 | 5,00 | 160,25 |
| 13262 | | OR | FKM | 80 | | | 24,00 | 5,00 | 162,03 |
| 12311 | | OR | FKM | 80 | | | 25,00 | 5,00 | 138,88 |
| 12316 | | OR | FKM | 80 | | | 26,00 | 5,00 | 167,36 |
| 13280 | | OR | FKM | 80 | | | 27,00 | 5,00 | 170,93 |
| 13287 | | OR | FKM | 80 | | | 28,00 | 5,00 | 153,13 |
| 10419 | | OR | FKM | 80 | | | 29,00 | 5,00 | 185,18 |
| 13297 | | OR | FKM | 80 | | | 30,00 | 5,00 | 163,80 |
| 13847 | | OR | FKM | 80 | | | 31,00 | 5,00 | 195,86 |
| 12195 | | OR | FKM | 80 | | | 32,00 | 5,00 | 174,49 |
| 12331 | | OR | FKM | 80 | | | 33,00 | 5,00 | 202,98 |
| 12334 | | OR | FKM | 80 | | | 34,00 | 5,00 | 210,10 |
| 13322 | | OR | FKM | 80 | | | 35,00 | 5,00 | 217,23 |
| 12341 | | OR | FKM | 80 | | | 36,00 | 5,00 | 220,79 |
| 10522 | | OR | FKM | 80 | | | 37,00 | 5,00 | 227,91 |
| 12347 | | OR | FKM | 80 | | | 38,00 | 5,00 | 202,98 |
| 13342 | | OR | FKM | 80 | | | 39,00 | 5,00 | 238,59 |
| 13350 | | OR | FKM | 80 | | | 40,00 | 5,00 | 210,10 |
| 10576 | | OR | FKM | 80 | | | 41,00 | 5,00 | 249,28 |
| 13360 | | OR | FKM | 80 | | | 42,00 | 5,00 | 252,84 |
| 12434 | | OR | FKM | 80 | | | 43,00 | 5,00 | 224,35 |
| 13370 | | OR | FKM | 80 | | | 44,00 | 5,00 | 263,51 |
| 9873 | | OR | FKM | 80 | | | 45,00 | 5,00 | 235,03 |
| 10632 | | OR | FKM | 80 | | | 46,00 | 5,00 | 274,19 |
| 10639 | | OR | FKM | 80 | | | 47,00 | 5,00 | 281,31 |
| 12189 | | OR | FKM | 80 | | | 48,00 | 5,00 | 249,28 |
| 67503 | | OR | FKM | 80 | | | 49,00 | 5,00 | 288,44 |
| 13395 | | OR | FKM | 80 | | | 50,00 | 5,00 | 252,84 |
| 10699 | | OR | FKM | 80 | | | 51,00 | 5,00 | 295,56 |

| CODICE | NUOVO CODICE | TIPO | MAT. | SH | RIFERIMENTI USA | RIFERIMENTI UK | d1 mm | d2 mm | LISTINO 5-2016 X 100 € |
|---|---|---|---|---|---|---|---|---|---|
| 9634 | | OR | FKM | 80 | | | 52,00 | 5,00 | 259,95 |
| 12369 | | OR | FKM | 80 | | | 53,00 | 5,00 | 263,51 |
| 10735 | | OR | FKM | 80 | | | 54,00 | 5,00 | 309,80 |
| 13412 | | OR | FKM | 80 | | | 55,00 | 5,00 | 274,19 |
| 10754 | | OR | FKM | 80 | | | 56,00 | 5,00 | 320,49 |
| 10003 | | OR | FKM | 80 | | | 57,00 | 5,00 | 284,88 |
| 10777 | | OR | FKM | 80 | | | 58,00 | 5,00 | 292,00 |
| 12375 | | OR | FKM | 80 | | | 59,00 | 5,00 | 345,42 |
| 13430 | | OR | FKM | 80 | | | 60,00 | 5,00 | 306,24 |
| 13848 | | OR | FKM | 80 | | | 61,00 | 5,00 | 356,10 |
| 9900 | | OR | FKM | 80 | | | 62,00 | 5,00 | 313,37 |
| 12196 | | OR | FKM | 80 | | | 63,00 | 5,00 | 320,49 |
| 10838 | | OR | FKM | 80 | | | 64,00 | 5,00 | 377,47 |
| 13442 | | OR | FKM | 80 | | | 65,00 | 5,00 | 327,62 |
| 10863 | | OR | FKM | 80 | | | 66,00 | 5,00 | 384,59 |
| 13849 | | OR | FKM | 80 | | | 67,00 | 5,00 | 338,30 |
| 13451 | | OR | FKM | 80 | | | 68,00 | 5,00 | 398,84 |
| 10888 | | OR | FKM | 80 | | | 69,00 | 5,00 | 409,53 |
| 9871 | | OR | FKM | 80 | | | 70,00 | 5,00 | 359,67 |
| 67504 | | OR | FKM | 80 | | | 71,00 | 5,00 | 420,20 |
| 10005 | | OR | FKM | 80 | | | 72,00 | 5,00 | 430,88 |
| 12400 | | OR | FKM | 80 | | | 73,00 | 5,00 | 441,57 |
| 10931 | | OR | FKM | 80 | | | 74,00 | 5,00 | 448,68 |
| 13466 | | OR | FKM | 80 | | | 75,00 | 5,00 | 395,28 |
| 13679 | | OR | FKM | 80 | | | 76,00 | 5,00 | 459,37 |
| 10960 | | OR | FKM | 80 | | | 77,00 | 5,00 | 470,05 |
| 10008 | | OR | FKM | 80 | | | 78,00 | 5,00 | 413,08 |
| 67505 | | OR | FKM | 80 | | | 79,00 | 5,00 | 487,85 |
| 13479 | | OR | FKM | 80 | | | 80,00 | 5,00 | 430,88 |
| 12109 | | OR | FKM | 80 | | | 81,00 | 5,00 | 502,10 |
| 10010 | | OR | FKM | 80 | | | 82,00 | 5,00 | 505,67 |
| 11011 | | OR | FKM | 80 | | | 83,00 | 5,00 | 512,79 |
| 13851 | | OR | FKM | 80 | | | 84,00 | 5,00 | 519,90 |
| 10012 | | OR | FKM | 80 | | | 85,00 | 5,00 | 455,80 |
| 11034 | | OR | FKM | 80 | | | 86,00 | 5,00 | 530,59 |
| 11044 | | OR | FKM | 80 | | | 87,00 | 5,00 | 534,15 |
| 10013 | | OR | FKM | 80 | | | 88,00 | 5,00 | 470,05 |
| 11065 | | OR | FKM | 80 | | | 89,00 | 5,00 | 548,40 |
| 13495 | | OR | FKM | 80 | | | 90,00 | 5,00 | 480,74 |
| 67506 | | OR | FKM | 80 | | | 91,00 | 5,00 | 559,08 |
| 13691 | | OR | FKM | 80 | | | 92,00 | 5,00 | 566,20 |
| 11095 | | OR | FKM | 80 | | | 93,00 | 5,00 | 569,77 |
| 11105 | | OR | FKM | 80 | | | 94,00 | 5,00 | 576,89 |
| 9904 | | OR | FKM | 80 | | | 95,00 | 5,00 | 505,67 |
| 11122 | | OR | FKM | 80 | | | 96,00 | 5,00 | 587,57 |
| 13650 | | OR | FKM | 80 | | | 97,00 | 5,00 | 516,35 |
| 25461 | | OR | FKM | 80 | | | 98,00 | 5,00 | 598,26 |
| 1138 | | OR | FKM | 80 | | | 99,00 | 5,00 | 598,26 |
| 9881 | | OR | FKM | 80 | | | 100,00 | 5,00 | 519,90 |

| CODICE | NUOVO CODICE | TIPO | MAT. | SH | RIFERIMENTI USA | RIFERIMENTI UK | d1 mm | d2 mm | LISTINO 5-2016 X 100 € |
|---|---|---|---|---|---|---|---|---|---|
| 12432 | | OR | FKM | 80 | | | 102,00 | 5,00 | 532,36 |
| 11168 | | OR | FKM | 80 | | | 104,00 | 5,00 | 538,15 |
| 13519 | | OR | FKM | 80 | | | 105,00 | 5,00 | 540,46 |
| 11195 | | OR | FKM | 80 | | | 106,00 | 5,00 | 549,72 |
| 9910 | | OR | FKM | 80 | | | 107,00 | 5,00 | 555,51 |
| 9874 | | OR | FKM | 80 | | | 110,00 | 5,00 | 572,87 |
| 11220 | | OR | FKM | 80 | | | 111,00 | 5,00 | 578,66 |
| 9916 | | OR | FKM | 80 | | | 112,00 | 5,00 | 594,40 |
| 11233 | | OR | FKM | 80 | | | 114,00 | 5,00 | 606,43 |
| 9899 | | OR | FKM | 80 | | | 115,00 | 5,00 | 612,22 |
| 67509 | | OR | FKM | 80 | | | 117,00 | 5,00 | 631,89 |
| 9920 | | OR | FKM | 80 | | | 118,00 | 5,00 | 638,84 |
| 9922 | | OR | FKM | 80 | | | 120,00 | 5,00 | 649,25 |
| 9658 | | OR | FKM | 80 | | | 122,00 | 5,00 | 661,98 |
| 11293 | | OR | FKM | 80 | | | 124,00 | 5,00 | 675,87 |
| 13540 | | OR | FKM | 80 | | | 125,00 | 5,00 | 685,13 |
| 13713 | | OR | FKM | 80 | | | 126,00 | 5,00 | 693,23 |
| 9664 | | OR | FKM | 80 | | | 127,00 | 5,00 | 699,02 |
| 13852 | | OR | FKM | 80 | | | 128,00 | 5,00 | 704,80 |
| 9930 | | OR | FKM | 80 | | | 130,00 | 5,00 | 717,53 |
| 9933 | | OR | FKM | 80 | | | 132,00 | 5,00 | 731,42 |
| 26754 | | OR | FKM | 80 | | | 133,00 | 5,00 | 739,52 |
| 9894 | | OR | FKM | 80 | | | 135,00 | 5,00 | 753,41 |
| 11347 | | OR | FKM | 80 | | | 136,00 | 5,00 | 760,35 |
| 11357 | | OR | FKM | 80 | | | 138,00 | 5,00 | 774,24 |
| 13560 | | OR | FKM | 80 | | | 140,00 | 5,00 | 789,29 |
| 11372 | | OR | FKM | 80 | | | 142,00 | 5,00 | 824,93 |
| 9938 | | OR | FKM | 80 | | | 145,00 | 5,00 | 858,73 |
| 11387 | | OR | FKM | 80 | | | 146,00 | 5,00 | 870,30 |
| 11394 | | OR | FKM | 80 | | | 148,00 | 5,00 | 894,60 |
| 9940 | | OR | FKM | 80 | | | 150,00 | 5,00 | 918,91 |
| 9689 | | OR | FKM | 80 | | | 152,00 | 5,00 | 982,56 |
| 11417 | | OR | FKM | 80 | | | 154,00 | 5,00 | 994,13 |
| 9941 | | OR | FKM | 80 | | | 155,00 | 5,00 | 1.003,39 |
| 11431 | | OR | FKM | 80 | | | 157,00 | 5,00 | 1.014,19 |
| 9694 | | OR | FKM | 80 | | | 158,00 | 5,00 | 1.014,19 |
| 9943 | | OR | FKM | 80 | | | 160,00 | 5,00 | 1.054,31 |
| 66393 | | OR | FKM | 80 | | | 161,00 | 5,00 | - |
| 11449 | | OR | FKM | 80 | | | 162,00 | 5,00 | 1.091,35 |
| 67519 | | OR | FKM | 80 | | | 163,00 | 5,00 | - |
| 11454 | | OR | FKM | 80 | | | 164,00 | 5,00 | 1.124,91 |
| 9901 | | OR | FKM | 80 | | | 165,00 | 5,00 | 1.142,27 |
| 67520 | | OR | FKM | 80 | | | 166,00 | 5,00 | - |
| 11467 | | OR | FKM | 80 | | | 167,00 | 5,00 | - |
| 26778 | | OR | FKM | 80 | | | 168,00 | 5,00 | 1.171,20 |
| 67521 | | OR | FKM | 80 | | | 169,00 | 5,00 | - |
| 9946 | | OR | FKM | 80 | | | 170,00 | 5,00 | 1.205,92 |
| 67522 | | OR | FKM | 80 | | | 171,00 | 5,00 | - |
| 67523 | | OR | FKM | 80 | | | 172,00 | 5,00 | 1.239,48 |

| CODICE | NUOVO CODICE | TIPO | MAT. | SH | RIFERIMENTI USA | RIFERIMENTI UK | d1 mm | d2 mm | LISTINO 5-2016 X 100 € |
|---|---|---|---|---|---|---|---|---|---|
| 11489 | | OR | FKM | 80 | | | 173,00 | 5,00 | - |
| 67524 | | OR | FKM | 80 | | | 174,00 | 5,00 | - |
| 9948 | | OR | FKM | 80 | | | 175,00 | 5,00 | 1.291,56 |
| 67525 | | OR | FKM | 80 | | | 176,00 | 5,00 | 1.308,92 |
| 67526 | | OR | FKM | 80 | | | 177,00 | 5,00 | 1.326,28 |
| 67527 | | OR | FKM | 80 | | | 178,00 | 5,00 | 1.343,64 |
| 13594 | | OR | FKM | 80 | | | 180,00 | 5,00 | 1.377,20 |
| 11516 | | OR | FKM | 80 | | | 182,00 | 5,00 | 1.411,92 |
| 9952 | | OR | FKM | 80 | | | 185,00 | 5,00 | 1.439,70 |
| 67534 | | OR | FKM | 80 | | | 188,00 | 5,00 | 1.483,67 |
| 9891 | | OR | FKM | 80 | | | 190,00 | 5,00 | 1.527,65 |
| 9724 | | OR | FKM | 80 | | | 193,00 | 5,00 | 1.548,79 |
| 11558 | | OR | FKM | 80 | | | 198,00 | 5,00 | 1.632,97 |
| 9960 | | OR | FKM | 80 | | | 200,00 | 5,00 | 1.661,90 |
| BR. STD METRIC BS 4518 - JAPAN STD JIS 240 P+G - SWEDISH STD SMS 1586 | | | | | | | | | |
| 13026 | | OR | FKM | 80 | | | 44,20 | 5,70 | 288,44 |
| 25430 | | OR | FKM | 80 | | | 44,30 | 5,70 | 288,44 |
| 13027 | | OR | FKM | 80 | | | 45,20 | 5,70 | 295,56 |
| 25431 | | OR | FKM | 80 | | | 45,30 | 5,70 | 295,56 |
| 13029 | | OR | FKM | 80 | | | 49,20 | 5,70 | 313,37 |
| 25433 | | OR | FKM | 80 | | | 49,30 | 5,70 | 313,37 |
| 13031 | | OR | FKM | 80 | | | 52,20 | 5,70 | 327,62 |
| 25437 | | OR | FKM | 80 | | | 52,30 | 5,70 | 327,62 |
| 13032 | | OR | FKM | 80 | | | 54,20 | 5,70 | 338,30 |
| 25439 | | OR | FKM | 80 | | | 54,30 | 5,70 | 338,30 |
| 25441 | | OR | FKM | 80 | | | 55,30 | 5,70 | 395,28 |
| 13034 | | OR | FKM | 80 | | | 59,20 | 5,70 | 373,92 |
| 25443 | | OR | FKM | 80 | | | 59,30 | 5,70 | 373,92 |
| 13036 | | OR | FKM | 80 | | | 62,20 | 5,70 | 391,72 |
| 25445 | | OR | FKM | 80 | | | 62,30 | 5,70 | 391,72 |
| 13037 | | OR | FKM | 80 | | | 64,20 | 5,70 | 402,40 |
| 25447 | | OR | FKM | 80 | | | 64,30 | 5,70 | 402,40 |
| 75613 | | OR | FKM | 80 | | | 69,00 | 5,70 | 512,79 |
| 13074 | | OR | FKM | 80 | | | 69,20 | 5,70 | 445,13 |
| 25448 | | OR | FKM | 80 | | | 69,30 | 5,70 | 445,13 |
| 75543 | | OR | FKM | 80 | | | 74,00 | 5,70 | 559,08 |
| 13041 | | OR | FKM | 80 | | | 74,20 | 5,70 | 487,85 |
| 25451 | | OR | FKM | 80 | | | 74,30 | 5,70 | 487,85 |
| 75688 | | OR | FKM | 80 | | | 79,00 | 5,70 | 608,93 |
| 13043 | | OR | FKM | 80 | | | 79,20 | 5,70 | 530,59 |
| 25452 | | OR | FKM | 80 | | | 79,30 | 5,70 | 530,59 |
| 13044 | | OR | FKM | 80 | | | 81,20 | 5,70 | 544,84 |
| 23963 | | OR | FKM | 80 | | | 84,00 | 5,70 | 648,11 |
| 13046 | | OR | FKM | 80 | | | 84,20 | 5,70 | 559,08 |
| 25454 | | OR | FKM | 80 | | | 84,30 | 5,70 | 559,08 |
| 75712 | | OR | FKM | 80 | | | 89,00 | 5,70 | 680,16 |
| 13048 | | OR | FKM | 80 | | | 89,20 | 5,70 | 591,13 |
| 25455 | | OR | FKM | 80 | | | 89,30 | 5,70 | 591,13 |

| CODICE | NUOVO CODICE | TIPO | MAT. | SH | RIFERIMENTI USA | RIFERIMENTI UK | d1 mm | d2 mm | LISTINO 5-2016 X 100 € |
|---|---|---|---|---|---|---|---|---|---|
| 13049 | | OR | FKM | 80 | | | 92,20 | 5,70 | 608,93 |
| 75614 | | OR | FKM | 80 | | | 94,00 | 5,70 | 719,33 |
| 13050 | | OR | FKM | 80 | | | 94,20 | 5,70 | 623,18 |
| 25457 | | OR | FKM | 80 | | | 94,30 | 5,70 | 623,18 |
| 75544 | | OR | FKM | 80 | | | 99,00 | 5,70 | 744,26 |
| 13052 | | OR | FKM | 80 | | | 99,20 | 5,70 | 648,11 |
| 75713 | | OR | FKM | 80 | | | 104,00 | 5,70 | 769,18 |
| 13053 | | OR | FKM | 80 | | | 104,20 | 5,70 | 669,47 |
| 25468 | | OR | FKM | 80 | | | 104,30 | 5,70 | 669,47 |
| 75615 | | OR | FKM | 80 | | | 109,00 | 5,70 | 804,78 |
| 13054 | | OR | FKM | 80 | | | 109,20 | 5,70 | 701,52 |
| 25472 | | OR | FKM | 80 | | | 109,30 | 5,70 | 701,52 |
| 75545 | | OR | FKM | 80 | | | 114,00 | 5,70 | 840,39 |
| 13055 | | OR | FKM | 80 | | | 114,20 | 5,70 | 730,02 |
| 25479 | | OR | FKM | 80 | | | 114,30 | 5,70 | 730,02 |
| 75714 | | OR | FKM | 80 | | | 119,00 | 5,70 | 876,01 |
| 13056 | | OR | FKM | 80 | | | 119,20 | 5,70 | 762,06 |
| 25481 | | OR | FKM | 80 | | | 119,30 | 5,70 | 762,06 |
| 13057 | | OR | FKM | 80 | | | 124,20 | 5,70 | 790,54 |
| 25491 | | OR | FKM | 80 | | | 124,30 | 5,70 | 790,54 |
| 13058 | | OR | FKM | 80 | | | 129,20 | 5,70 | 865,33 |
| 25504 | | OR | FKM | 80 | | | 129,30 | 5,70 | 865,33 |
| 13060 | | OR | FKM | 80 | | | 134,20 | 5,70 | 897,38 |
| 25509 | | OR | FKM | 80 | | | 134,30 | 5,70 | 897,38 |
| 13061 | | OR | FKM | 80 | | | 139,20 | 5,70 | 929,43 |
| 25514 | | OR | FKM | 80 | | | 139,30 | 5,70 | 929,43 |
| 13062 | | OR | FKM | 80 | | | 144,20 | 5,70 | 961,47 |
| 25521 | | OR | FKM | 80 | | | 144,30 | 5,70 | 961,47 |
| 13063 | | OR | FKM | 80 | | | 149,20 | 5,70 | 993,52 |
| 25527 | | OR | FKM | 80 | | | 149,30 | 5,70 | 993,52 |
| 13064 | | OR | FKM | 80 | | | 154,20 | 5,70 | 1.025,57 |
| 25529 | | OR | FKM | 80 | | | 154,30 | 5,70 | 1.025,57 |
| 13065 | | OR | FKM | 80 | | | 159,20 | 5,70 | 1.057,62 |
| 25537 | | OR | FKM | 80 | | | 159,30 | 5,70 | 1.057,62 |
| 13066 | | OR | FKM | 80 | | | 164,20 | 5,70 | 1.089,67 |
| 25539 | | OR | FKM | 80 | | | 164,30 | 5,70 | 1.089,67 |
| 13067 | | OR | FKM | 80 | | | 169,20 | 5,70 | 1.121,72 |
| 22698 | | OR | FKM | 80 | | | 169,30 | 5,70 | 1.121,72 |
| 13068 | | OR | FKM | 80 | | | 174,20 | 5,70 | 1.153,77 |
| 25541 | | OR | FKM | 80 | | | 174,30 | 5,70 | 1.153,77 |
| 13069 | | OR | FKM | 80 | | | 179,20 | 5,70 | 1.185,82 |
| 22695 | | OR | FKM | 80 | | | 179,30 | 5,70 | 1.185,82 |
| 13070 | | OR | FKM | 80 | | | 184,20 | 5,70 | 1.217,87 |
| 25546 | | OR | FKM | 80 | | | 184,30 | 5,70 | 1.217,87 |
| 13071 | | OR | FKM | 80 | | | 189,20 | 5,70 | 1.249,92 |
| 25548 | | OR | FKM | 80 | | | 189,30 | 5,70 | 1.249,92 |
| 13072 | | OR | FKM | 80 | | | 194,20 | 5,70 | 1.281,97 |
| 25549 | | OR | FKM | 80 | | | 194,30 | 5,70 | 1.281,97 |
| 13073 | | OR | FKM | 80 | | | 199,20 | 5,70 | 1.314,01 |

| CODICE | NUOVO CODICE | TIPO | MAT. | SH | RIFERIMENTI USA | RIFERIMENTI UK | d1 mm | d2 mm | LISTINO 5-2016 X 100 € |
|---|---|---|---|---|---|---|---|---|---|
| 22696 | | OR | FKM | 80 | | | 199,30 | 5,70 | 1.314,01 |
| 13076 | | OR | FKM | 80 | | | 209,20 | 5,70 | 1.374,55 |
| 194481 | | OR | FKM | 80 | | | 209,30 | 5,70 | 1.374,55 |
| 13077 | | OR | FKM | 80 | | | 219,20 | 5,70 | 1.406,61 |
| 24005 | | OR | FKM | 80 | | | 219,30 | 5,70 | 1.406,61 |
| 13078 | | OR | FKM | 80 | | | 229,20 | 5,70 | 1.502,75 |
| 25554 | | OR | FKM | 80 | | | 229,30 | 5,70 | 1.502,75 |
| 13079 | | OR | FKM | 80 | | | 239,20 | 5,70 | 1.570,41 |
| 24010 | | OR | FKM | 80 | | | 239,30 | 5,70 | 1.570,41 |
| 13080 | | OR | FKM | 80 | | | 249,20 | 5,70 | 1.634,51 |
| 24014 | | OR | FKM | 80 | | | 249,30 | 5,70 | 1.634,51 |
| 13081 | | OR | FKM | 80 | | | 259,20 | 5,70 | 1.698,60 |
| 24018 | | OR | FKM | 80 | | | 259,30 | 5,70 | 1.698,60 |
| 13082 | | OR | FKM | 80 | | | 269,20 | 5,70 | 1.784,08 |
| 25564 | | OR | FKM | 80 | | | 269,30 | 5,70 | 1.784,08 |
| 13083 | | OR | FKM | 80 | | | 279,20 | 5,70 | 1.848,17 |
| 24022 | | OR | FKM | 80 | | | 279,30 | 5,70 | 1.848,17 |
| 13667 | | OR | FKM | 80 | | | 289,20 | 5,70 | 1.958,57 |
| 25570 | | OR | FKM | 80 | | | 289,30 | 5,70 | 1.958,57 |
| 13084 | | OR | FKM | 80 | | | 299,20 | 5,70 | 2.026,22 |
| 25573 | | OR | FKM | 80 | | | 299,30 | 5,70 | 2.026,22 |
| 13085 | | OR | FKM | 80 | | | 319,20 | 5,70 | 2.157,98 |
| 25576 | | OR | FKM | 80 | | | 319,30 | 5,70 | 2.157,98 |
| 64365 | | OR | FKM | 80 | | | 329,30 | 5,70 | 2.563,93 |
| 13086 | | OR | FKM | 80 | | | 339,20 | 5,70 | 2.289,74 |
| 25577 | | OR | FKM | 80 | | | 339,30 | 5,70 | 2.289,74 |
| 180989 | | OR | FKM | 80 | | | 359,20 | 5,70 | 2.421,50 |
| 184751 | | OR | FKM | 80 | | | 359,30 | 5,70 | 2.421,50 |
| 13088 | | OR | FKM | 80 | | | 379,20 | 5,70 | 2.556,81 |
| 25580 | | OR | FKM | 80 | | | 379,30 | 5,70 | 2.556,81 |
| 13089 | | OR | FKM | 80 | | | 399,20 | 5,70 | 2.688,57 |
| 25582 | | OR | FKM | 80 | | | 399,30 | 5,70 | 2.688,57 |
| 25588 | | OR | FKM | 80 | | | 419,20 | 5,70 | 2.820,34 |
| 13670 | | OR | FKM | 80 | | | 419,30 | 5,70 | 2.820,34 |
| 25590 | | OR | FKM | 80 | | | 439,20 | 5,70 | 2.955,65 |
| 13671 | | OR | FKM | 80 | | | 439,30 | 5,70 | 2.955,65 |
| 13744 | | OR | FKM | 80 | | | 459,20 | 5,70 | 3.087,40 |
| 25591 | | OR | FKM | 80 | | | 459,30 | 5,70 | 3.087,40 |
| 25593 | | OR | FKM | 80 | | | 479,20 | 5,70 | 3.222,73 |
| 13672 | | OR | FKM | 80 | | | 479,30 | 5,70 | 3.222,73 |
| 25594 | | OR | FKM | 80 | | | 499,20 | 5,70 | 3.354,48 |
| 13673 | | OR | FKM | 80 | | | 499,30 | 5,70 | 3.354,48 |
| | | | | METRIC STANDARD | | | | | |
| 10105 | | OR | FKM | 80 | | | 6,00 | 6,00 | 110,39 |
| 10118 | | OR | FKM | 80 | | | 7,00 | 6,00 | 113,95 |
| 10141 | | OR | FKM | 80 | | | 9,00 | 6,00 | 121,08 |
| 12245 | | OR | FKM | 80 | | | 10,00 | 6,00 | 128,19 |
| 10171 | | OR | FKM | 80 | | | 11,00 | 6,00 | 135,31 |
| 10189 | | OR | FKM | 80 | | | 12,00 | 6,00 | 142,44 |

| CODICE | NUOVO CODICE | TIPO | MAT. | SH | RIFERIMENTI USA | RIFERIMENTI UK | d1 mm | d2 mm | LISTINO 5-2016 X 100 € |
|---|---|---|---|---|---|---|---|---|---|
| 10199 | | OR | FKM | 80 | | | 13,00 | 6,00 | 153,13 |
| 10213 | | OR | FKM | 80 | | | 14,00 | 6,00 | 160,25 |
| 12272 | | OR | FKM | 80 | | | 15,00 | 6,00 | 167,36 |
| 10237 | | OR | FKM | 80 | | | 16,00 | 6,00 | 174,49 |
| 10258 | | OR | FKM | 80 | | | 18,00 | 6,00 | 188,74 |
| 23900 | | OR | FKM | 80 | | | 19,00 | 6,00 | 192,30 |
| 10276 | | OR | FKM | 80 | | | 19,50 | 6,00 | 195,86 |
| 12296 | | OR | FKM | 80 | | | 20,00 | 6,00 | 199,41 |
| 12301 | | OR | FKM | 80 | | | 21,00 | 6,00 | 206,54 |
| 10313 | | OR | FKM | 80 | | | 22,00 | 6,00 | 213,66 |
| 12308 | | OR | FKM | 80 | | | 23,00 | 6,00 | 217,23 |
| 26663 | | OR | FKM | 80 | | | 23,50 | 6,00 | 220,79 |
| 12310 | | OR | FKM | 80 | | | 24,00 | 6,00 | 224,35 |
| 12312 | | OR | FKM | 80 | | | 25,00 | 6,00 | 227,91 |
| 10376 | | OR | FKM | 80 | | | 26,00 | 6,00 | 235,03 |
| 12320 | | OR | FKM | 80 | | | 27,00 | 6,00 | 242,15 |
| 12321 | | OR | FKM | 80 | | | 28,00 | 6,00 | 249,28 |
| 10420 | | OR | FKM | 80 | | | 29,00 | 6,00 | 256,39 |
| 12325 | | OR | FKM | 80 | | | 30,00 | 6,00 | 263,51 |
| 12328 | | OR | FKM | 80 | | | 31,00 | 6,00 | 270,63 |
| 10462 | | OR | FKM | 80 | | | 32,00 | 6,00 | 277,75 |
| 10472 | | OR | FKM | 80 | | | 33,00 | 6,00 | 284,88 |
| 10486 | | OR | FKM | 80 | | | 34,00 | 6,00 | 292,00 |
| 12339 | | OR | FKM | 80 | | | 35,00 | 6,00 | 299,13 |
| 12342 | | OR | FKM | 80 | | | 36,00 | 6,00 | 306,24 |
| 10524 | | OR | FKM | 80 | | | 37,00 | 6,00 | 313,37 |
| 10536 | | OR | FKM | 80 | | | 38,00 | 6,00 | 320,49 |
| 25223 | | OR | FKM | 80 | | | 39,00 | 6,00 | 327,62 |
| 10562 | | OR | FKM | 80 | | | 40,00 | 6,00 | 334,74 |
| 65668 | | OR | FKM | 80 | | | 41,00 | 6,00 | 341,85 |
| 67726 | | OR | FKM | 80 | | | 41,50 | 6,00 | 345,42 |
| 10590 | | OR | FKM | 80 | | | 42,00 | 6,00 | 348,98 |
| 12355 | | OR | FKM | 80 | | | 43,00 | 6,00 | 356,10 |
| 10608 | | OR | FKM | 80 | | | 44,00 | 6,00 | 363,23 |
| 10616 | | OR | FKM | 80 | | | 44,50 | 6,00 | 366,79 |
| 10621 | | OR | FKM | 80 | | | 45,00 | 6,00 | 370,35 |
| 12360 | | OR | FKM | 80 | | | 46,00 | 6,00 | 377,47 |
| 10641 | | OR | FKM | 80 | | | 47,00 | 6,00 | 384,59 |
| 12363 | | OR | FKM | 80 | | | 48,00 | 6,00 | 391,72 |
| 10665 | | OR | FKM | 80 | | | 49,00 | 6,00 | 395,28 |
| 10676 | | OR | FKM | 80 | | | 50,00 | 6,00 | 398,84 |
| 10702 | | OR | FKM | 80 | | | 51,00 | 6,00 | 1.324,70 |
| 12197 | | OR | FKM | 80 | | | 52,00 | 6,00 | 405,97 |
| 10724 | | OR | FKM | 80 | | | 53,00 | 6,00 | 413,08 |
| 10736 | | OR | FKM | 80 | | | 54,00 | 6,00 | 420,20 |
| 10742 | | OR | FKM | 80 | | | 55,00 | 6,00 | 427,33 |
| 10756 | | OR | FKM | 80 | | | 56,00 | 6,00 | 434,44 |
| 10766 | | OR | FKM | 80 | | | 57,00 | 6,00 | 441,57 |
| 10779 | | OR | FKM | 80 | | | 58,00 | 6,00 | 452,24 |

| CODICE | NUOVO CODICE | TIPO | MAT. | SH | RIFERIMENTI USA | RIFERIMENTI UK | d1 mm | d2 mm | LISTINO 5-2016 X 100 € |
|---|---|---|---|---|---|---|---|---|---|
| 10792 | | OR | FKM | 80 | | | 59,50 | 6,00 | 466,49 |
| 10803 | | OR | FKM | 80 | | | 60,00 | 6,00 | 473,62 |
| 12379 | | OR | FKM | 80 | | | 61,00 | 6,00 | 480,74 |
| 10823 | | OR | FKM | 80 | | | 62,00 | 6,00 | 487,85 |
| 12386 | | OR | FKM | 80 | | | 63,00 | 6,00 | 494,98 |
| 10839 | | OR | FKM | 80 | | | 64,00 | 6,00 | 502,10 |
| 10850 | | OR | FKM | 80 | | | 65,00 | 6,00 | 509,23 |
| 10864 | | OR | FKM | 80 | | | 66,00 | 6,00 | 516,35 |
| 10878 | | OR | FKM | 80 | | | 67,00 | 6,00 | 523,47 |
| 12391 | | OR | FKM | 80 | | | 68,00 | 6,00 | 537,72 |
| 10889 | | OR | FKM | 80 | | | 69,00 | 6,00 | 551,97 |
| 12200 | | OR | FKM | 80 | | | 70,00 | 6,00 | 562,64 |
| 67727 | | OR | FKM | 80 | | | 72,00 | 6,00 | 584,02 |
| 10932 | | OR | FKM | 80 | | | 74,00 | 6,00 | 605,37 |
| 12403 | | OR | FKM | 80 | | | 75,00 | 6,00 | 616,06 |
| 10948 | | OR | FKM | 80 | | | 76,00 | 6,00 | 623,18 |
| 10966 | | OR | FKM | 80 | | | 78,00 | 6,00 | 644,54 |
| 67728 | | OR | FKM | 80 | | | 78,50 | 6,00 | 655,23 |
| 10971 | | OR | FKM | 80 | | | 79,00 | 6,00 | 662,34 |
| 10984 | | OR | FKM | 80 | | | 80,00 | 6,00 | 669,47 |
| 10996 | | OR | FKM | 80 | | | 81,00 | 6,00 | 1.858,85 |
| 67729 | | OR | FKM | 80 | | | 81,50 | 6,00 | 680,16 |
| 11017 | | OR | FKM | 80 | | | 84,00 | 6,00 | 701,52 |
| 12413 | | OR | FKM | 80 | | | 85,00 | 6,00 | 708,64 |
| 11035 | | OR | FKM | 80 | | | 86,00 | 6,00 | 715,77 |
| 11054 | | OR | FKM | 80 | | | 88,00 | 6,00 | 733,57 |
| 11074 | | OR | FKM | 80 | | | 90,00 | 6,00 | 747,82 |
| 11089 | | OR | FKM | 80 | | | 92,00 | 6,00 | 762,06 |
| 11096 | | OR | FKM | 80 | | | 93,00 | 6,00 | 772,74 |
| 12424 | | OR | FKM | 80 | | | 95,00 | 6,00 | 786,98 |
| 12427 | | OR | FKM | 80 | | | 96,00 | 6,00 | 794,11 |
| 11134 | | OR | FKM | 80 | | | 98,00 | 6,00 | 801,23 |
| 11140 | | OR | FKM | 80 | | | 99,00 | 6,00 | 808,34 |
| 9896 | | OR | FKM | 80 | | | 100,00 | 6,00 | 811,91 |
| 12433 | | OR | FKM | 80 | | | 103,00 | 6,00 | 822,85 |
| 11169 | | OR | FKM | 80 | | | 104,00 | 6,00 | 828,64 |
| 11182 | | OR | FKM | 80 | | | 105,00 | 6,00 | 834,42 |
| 66133 | | OR | FKM | 80 | | | 106,00 | 6,00 | 840,21 |
| 9649 | | OR | FKM | 80 | | | 108,00 | 6,00 | 846,00 |
| 9913 | | OR | FKM | 80 | | | 110,00 | 6,00 | 851,78 |
| 11226 | | OR | FKM | 80 | | | 112,00 | 6,00 | 863,35 |
| 12438 | | OR | FKM | 80 | | | 114,00 | 6,00 | 869,14 |
| 9918 | | OR | FKM | 80 | | | 115,00 | 6,00 | 874,93 |
| 9655 | | OR | FKM | 80 | | | 118,00 | 6,00 | 880,71 |
| 9876 | | OR | FKM | 80 | | | 120,00 | 6,00 | 886,50 |
| 11281 | | OR | FKM | 80 | | | 122,00 | 6,00 | 893,44 |
| 11295 | | OR | FKM | 80 | | | 124,00 | 6,00 | 920,06 |
| 9660 | | OR | FKM | 80 | | | 125,00 | 6,00 | 931,64 |
| 9665 | | OR | FKM | 80 | | | 128,00 | 6,00 | 943,21 |

| CODICE | NUOVO CODICE | TIPO | MAT. | SH | RIFERIMENTI USA | RIFERIMENTI UK | d1 mm | d2 mm | LISTINO 5-2016 X 100 € |
|---|---|---|---|---|---|---|---|---|---|
| 9931 | | OR | FKM | 80 | | | 130,00 | 6,00 | 954,78 |
| 11328 | | OR | FKM | 80 | | | 132,00 | 6,00 | 966,36 |
| 26755 | | OR | FKM | 80 | | | 134,00 | 6,00 | 977,93 |
| 9935 | | OR | FKM | 80 | | | 135,00 | 6,00 | 989,50 |
| 12449 | | OR | FKM | 80 | | | 138,00 | 6,00 | 1.012,65 |
| 11362 | | OR | FKM | 80 | | | 139,20 | 6,00 | 1.024,22 |
| 9676 | | OR | FKM | 80 | | | 140,00 | 6,00 | 1.035,79 |
| 12193 | | OR | FKM | 80 | | | 142,00 | 6,00 | 1.049,68 |
| 9680 | | OR | FKM | 80 | | | 145,00 | 6,00 | 1.064,73 |
| 12453 | | OR | FKM | 80 | | | 148,00 | 6,00 | 1.091,35 |
| 9686 | | OR | FKM | 80 | | | 150,00 | 6,00 | 1.101,76 |
| 9690 | | OR | FKM | 80 | | | 153,00 | 6,00 | 1.115,65 |
| 9942 | | OR | FKM | 80 | | | 155,00 | 6,00 | 1.118,12 |
| 11424 | | OR | FKM | 80 | | | 155,50 | 6,00 | 1.118,12 |
| 11426 | | OR | FKM | 80 | | | 156,00 | 6,00 | 1.131,85 |
| 11436 | | OR | FKM | 80 | | | 158,00 | 6,00 | 1.155,92 |
| 9944 | | OR | FKM | 80 | | | 160,00 | 6,00 | 1.170,51 |
| 23828 | | OR | FKM | 80 | | | 165,00 | 6,00 | 1.197,82 |
| 12469 | | OR | FKM | 80 | | | 166,00 | 6,00 | 1.210,55 |
| 9702 | | OR | FKM | 80 | | | 170,00 | 6,00 | 1.237,17 |
| 9890 | | OR | FKM | 80 | | | 172,00 | 6,00 | 1.249,90 |
| 9882 | | OR | FKM | 80 | | | 175,00 | 6,00 | 1.263,78 |
| 9949 | | OR | FKM | 80 | | | 180,00 | 6,00 | 1.288,09 |
| 9713 | | OR | FKM | 80 | | | 182,00 | 6,00 | 1.310,08 |
| 9718 | | OR | FKM | 80 | | | 185,00 | 6,00 | 1.335,54 |
| 9721 | | OR | FKM | 80 | | | 188,00 | 6,00 | 1.362,16 |
| 9954 | | OR | FKM | 80 | | | 190,00 | 6,00 | 1.389,93 |
| 11546 | | OR | FKM | 80 | | | 193,00 | 6,00 | 1.439,70 |
| 9726 | | OR | FKM | 80 | | | 195,00 | 6,00 | 1.461,69 |
| 11552 | | OR | FKM | 80 | | | 196,00 | 6,00 | 1.474,42 |
| 11559 | | OR | FKM | 80 | | | 198,00 | 6,00 | 1.506,82 |
| 9961 | | OR | FKM | 80 | | | 200,00 | 6,00 | 1.542,70 |
| BR. STD METRIC BS 4518 - JAPAN STD JIS 240 P+G - SWEDISH STD SMS 1586 | | | | | | | | | |
| 170094 | | OR | FKM | 80 | | | 149,50 | 8,40 | 1.138,15 |
| 170095 | | OR | FKM | 80 | | | 154,50 | 8,40 | 1.172,47 |
| 170096 | | OR | FKM | 80 | | | 159,50 | 8,40 | 1.213,88 |
| 170097 | | OR | FKM | 80 | | | 164,50 | 8,40 | 1.244,94 |

Consultate i nostri uffici commerciali
per misure e prezzi non indicati

| CODICE | NUOVO CODICE | TIPO | MAT. | SH | RIFERIMENTI USA | RIFERIMENTI UK | d1 mm | d2 mm | LISTINO 5-2016 X 100 € |
|---|---|---|---|---|---|---|---|---|---|
| BRITISH STANDARD BS 1806 - AMERICAN STANDARD AS 568 A | | | | | | | | | |
| 119073 | | OR | NBR | 70 | | | 0,74 | 1,78 | 2,08 |
| 3283 | 182062 | OR | NBR | 70 | 2-4 | 2007 | 1,78 | 1,78 | 2,08 |
| 3284 | 182063 | OR | NBR | 70 | 2-5 | 2010 | 2,57 | 1,78 | 2,08 |
| 3285 | 182064 | OR | NBR | 70 | 2-6 | 2012 101 | 2,90 | 1,78 | 2,08 |
| 3286 | 182065 | OR | NBR | 70 | 2-7 | 2015 102 | 3,68 | 1,78 | 2,08 |
| 3287 | 182066 | OR | NBR | 70 | 2-8 | 2018 103 | 4,48 | 1,78 | 2,15 |
| 3288 | 182067 | OR | NBR | 70 | 2-9 | 2021 104 | 5,28 | 1,78 | 2,22 |
| 3289 | 182068 | OR | NBR | 70 | 2-10 | 2025 105 | 6,07 | 1,78 | 2,35 |
| 3336 | 182110 | OR | NBR | 70 | 5-052 | 106 | 6,75 | 1,78 | 2,49 |
| 3290 | 182069 | OR | NBR | 70 | 2-11 | 2031 107 | 7,66 | 1,78 | 2,49 |
| 3338 | 182112 | OR | NBR | 70 | 5-612 | 108 | 8,73 | 1,78 | 2,57 |
| 3291 | 182070 | OR | NBR | 70 | 2-12 | 2037 110 | 9,25 | 1,78 | 2,57 |
| 3292 | 182071 | OR | NBR | 70 | 2-13 | 2043 | 10,82 | 1,78 | 2,63 |
| 3339 | 182113 | OR | NBR | 70 | 5-613 | 114 | 11,11 | 1,78 | 2,77 |
| 3293 | 182072 | OR | NBR | 70 | 2-14 | 2050 | 12,42 | 1,78 | 2,83 |
| 3294 | 182073 | OR | NBR | 70 | 2-15 | 2056 | 14,00 | 1,78 | 2,98 |
| 3295 | 182074 | OR | NBR | 70 | 2-16 | 2062 | 15,60 | 1,78 | 3,32 |
| 3296 | 182075 | OR | NBR | 70 | 2-17 | 2068 | 17,16 | 1,78 | 3,60 |
| 3297 | 182076 | OR | NBR | 70 | 2-18 | 2075 | 18,77 | 1,78 | 4,02 |
| 3298 | 182077 | OR | NBR | 70 | 2-19 | 2081 | 20,35 | 1,78 | 4,29 |
| 3299 | 182078 | OR | NBR | 70 | 2-20 | 2087 | 21,95 | 1,78 | 4,85 |
| 3300 | 182079 | OR | NBR | 70 | 2-21 | 2093 | 23,53 | 1,78 | 5,12 |
| 3301 | | OR | NBR | 70 | 2-22 | 2100 | 25,12 | 1,78 | 5,47 |
| 3302 | | OR | NBR | 70 | 2-23 | 2106 | 26,70 | 1,78 | 5,82 |
| 3303 | 182082 | OR | NBR | 70 | 2-24 | 2112 | 28,30 | 1,78 | 6,30 |
| 3304 | 182083 | OR | NBR | 70 | 2-25 | 2118 | 29,87 | 1,78 | 6,78 |
| 3305 | | OR | NBR | 70 | 2-26 | 2125 | 31,47 | 1,78 | 7,14 |
| 3306 | | OR | NBR | 70 | 2-27 | 2131 | 33,05 | 1,78 | 7,41 |
| 3307 | 182086 | OR | NBR | 70 | 2-28 | 2137 | 34,65 | 1,78 | 8,10 |
| 3308 | 182087 | OR | NBR | 70 | 2-29 | 2150 | 37,82 | 1,78 | 9,14 |
| 3309 | 182088 | OR | NBR | 70 | 2-30 | 2162 | 41,00 | 1,78 | 9,42 |
| 3310 | 182089 | OR | NBR | 70 | 2-31 | 2175 | 44,17 | 1,78 | 11,43 |
| 3311 | 182090 | OR | NBR | 70 | 2-32 | 2187 | 47,37 | 1,78 | 13,09 |
| 3312 | 182091 | OR | NBR | 70 | 2-33 | 2200 | 50,52 | 1,78 | 13,71 |
| 3313 | 182092 | OR | NBR | 70 | 2-34 | 2212 | 53,67 | 1,78 | 15,03 |
| 3314 | | OR | NBR | 70 | 2-35 | 2225 | 56,87 | 1,78 | 16,00 |
| 3315 | 182094 | OR | NBR | 70 | 2-36 | 2237 | 60,04 | 1,78 | 17,38 |
| 3316 | | OR | NBR | 70 | 2-37 | 2250 | 63,22 | 1,78 | 19,12 |
| 3317 | 182096 | OR | NBR | 70 | 2-38 | 2262 | 66,40 | 1,78 | 20,49 |
| 3318 | 182097 | OR | NBR | 70 | 2-39 | 2275 | 69,57 | 1,78 | 21,81 |
| 3319 | 182098 | OR | NBR | 70 | 2-40 | 2287 | 72,76 | 1,78 | 22,78 |
| 3320 | 182099 | OR | NBR | 70 | 2-41 | 2300 | 75,92 | 1,78 | 25,61 |
| 3321 | 182100 | OR | NBR | 70 | 2-42 | 2325 | 82,28 | 1,78 | 28,39 |
| 3322 | 182101 | OR | NBR | 70 | 2-43 | 2350 | 88,62 | 1,78 | 30,75 |
| 3348 | | OR | NBR | 70 | | 2362 | 91,70 | 1,78 | 31,64 |
| 3323 | 182102 | OR | NBR | 70 | 2-44 | 2375 | 94,97 | 1,78 | 33,30 |
| 3324 | 182103 | OR | NBR | 70 | 2-45 | 2400 | 101,34 | 1,78 | 35,73 |
| 3325 | 182104 | OR | NBR | 70 | 2-46 | 2425 | 107,70 | 1,78 | 39,41 |

| CODICE | NUOVO CODICE | TIPO | MAT. | SH | RIFERIMENTI USA | RIFERIMENTI UK | d1 mm | d2 mm | LISTINO 5-2016 X 100 € |
|---|---|---|---|---|---|---|---|---|---|
| 3326 | 182105 | OR | NBR | 70 | 2-47 | 2450 | 114,00 | 1,78 | 42,93 |
| 3327 | 182106 | OR | NBR | 70 | 2-48 | 2475 | 120,40 | 1,78 | 49,99 |
| 3328 | 182107 | OR | NBR | 70 | 2-49 | 2500 | 126,76 | 1,78 | 52,76 |
| 3329 | 182108 | OR | NBR | 70 | 2-50 | 2525 | 133,07 | 1,78 | 56,22 |
| 26479 | | OR | NBR | 70 | | 2550 | 138,94 | 1,78 | 73,56 |
| 180247 | | OR | NBR | 70 | | 2562 | 142,11 | 1,78 | 75,76 |
| 5513 | 194368 | OR | NBR | 70 | | 2637 | 161,16 | 1,78 | 78,31 |
| 195728 | | OR | NBR | 71 | | | 164,34 | 1,78 | 79,85 |
| 21413 | 193842 | OR | NBR | 70 | 2-102 | | 1,24 | 2,62 | 2,83 |
| 21414 | | OR | NBR | 70 | 2-103 | | 2,06 | 2,62 | 2,83 |
| 21415 | 182739 | OR | NBR | 70 | 2-104 | | 2,84 | 2,62 | 2,83 |
| 21416 | | OR | NBR | 70 | 2-105 | | 3,63 | 2,62 | 2,83 |
| 3361 | 182125 | OR | NBR | 70 | 2-106 | | 4,42 | 2,62 | 2,83 |
| 3362 | 182126 | OR | NBR | 70 | 2-107 | 3021 | 5,23 | 2,62 | 2,83 |
| 3363 | 182127 | OR | NBR | 70 | 2-108 | 3024 | 6,02 | 2,62 | 2,83 |
| 3364 | 182128 | OR | NBR | 70 | 2-109 | 3030 | 7,60 | 2,62 | 2,83 |
| 41655 | | OR | NBR | 70 | 2-110 | 109 | 9,13 | 2,62 | 2,49 |
| 3365 | | OR | NBR | 70 | 2-110 | 3037 111 | 9,19 | 2,62 | 2,49 |
| 3355 | 182121 | OR | NBR | 70 | 5-614 | 112 | 9,92 | 2,62 | 2,49 |
| 3366 | 182130 | OR | NBR | 70 | 2-111 | 3043 113 | 10,78 | 2,62 | 2,49 |
| 3356 | 182122 | OR | NBR | 70 | 5-615 | 115 | 11,91 | 2,62 | 2,63 |
| 3367 | 182131 | OR | NBR | 70 | 2-112 | 3050 116 | 12,37 | 2,62 | 2,83 |
| 3358 | 182123 | OR | NBR | 70 | 5-616 | 117 | 13,10 | 2,62 | 2,98 |
| 3368 | 182132 | OR | NBR | 70 | 2-113 | 3056 118 | 13,95 | 2,62 | 2,98 |
| 3359 | | OR | NBR | 70 | 5-243 | 119 | 15,08 | 2,62 | 3,18 |
| 3369 | 182133 | OR | NBR | 70 | 2-114 | 3062 120 | 15,54 | 2,62 | 3,32 |
| 3360 | 182124 | OR | NBR | 70 | 5-617 | 121 | 15,88 | 2,62 | 3,46 |
| 3370 | 182134 | OR | NBR | 70 | 2-115 | 3068 122 | 17,13 | 2,62 | 3,60 |
| 3434 | | OR | NBR | 70 | 5-256 | 123 | 17,86 | 2,62 | 3,95 |
| 3371 | 182135 | OR | NBR | 70 | 2-116 | 3075 124 | 18,72 | 2,62 | 4,15 |
| 3372 | 182136 | OR | NBR | 70 | 2-117 | 3081 127 | 20,29 | 2,62 | 4,29 |
| 3435 | 182195 | OR | NBR | 70 | | 128 | 20,63 | 2,62 | 4,64 |
| 3373 | 182137 | OR | NBR | 70 | 2-118 | 3087 | 21,89 | 2,62 | 4,85 |
| 3436 | 182196 | OR | NBR | 70 | | 130 | 22,22 | 2,62 | 4,98 |
| 3374 | 182138 | OR | NBR | 70 | 2-119 | 3093 | 23,47 | 2,62 | 5,12 |
| 3437 | | OR | NBR | 70 | | 132 | 23,81 | 2,62 | 5,34 |
| 3375 | 182139 | OR | NBR | 70 | 2-120 | 3100 | 25,07 | 2,62 | 5,54 |
| 3376 | 181815 | OR | NBR | 70 | 2-121 | 3106 | 26,64 | 2,62 | 5,82 |
| 3377 | 182140 | OR | NBR | 70 | 2-122 | 3112 | 28,25 | 2,62 | 6,17 |
| 3378 | | OR | NBR | 70 | 2-123 | 3118 | 29,82 | 2,62 | 6,17 |
| 3379 | 182142 | OR | NBR | 70 | 2-124 | 3125 | 31,42 | 2,62 | 6,86 |
| 3380 | 182143 | OR | NBR | 70 | 2-125 | 3131 | 33,00 | 2,62 | 7,14 |
| 3381 | | OR | NBR | 70 | 2-126 | 3137 | 34,59 | 2,62 | 7,41 |
| 3382 | 182145 | OR | NBR | 70 | 2-127 | 3143 | 36,17 | 2,62 | 7,41 |
| 3383 | 182146 | OR | NBR | 70 | 2-128 | 3150 | 37,77 | 2,62 | 8,10 |
| 3384 | 182147 | OR | NBR | 70 | 2-129 | 3156 | 39,34 | 2,62 | 8,58 |
| 3385 | 182148 | OR | NBR | 70 | 2-130 | 3162 | 40,95 | 2,62 | 9,07 |
| 3386 | 182149 | OR | NBR | 70 | 2-131 | 3168 | 42,52 | 2,62 | 9,42 |
| 3387 | 182150 | OR | NBR | 70 | 2-132 | 3175 | 44,12 | 2,62 | 9,97 |

| CODICE | NUOVO CODICE | TIPO | MAT. | SH | RIFERIMENTI USA | RIFERIMENTI UK | d1 mm | d2 mm | LISTINO 5-2016 X 100 € |
|---|---|---|---|---|---|---|---|---|---|
| 3388 | 182151 | OR | NBR | 70 | 2-133 | 3181 | 45,69 | 2,62 | 10,38 |
| 3389 | 182152 | OR | NBR | 70 | 2-134 | 3187 | 47,29 | 2,62 | 10,87 |
| 3390 | 182153 | OR | NBR | 70 | 2-135 | 3193 | 48,90 | 2,62 | 11,43 |
| 3391 | 182154 | OR | NBR | 70 | 2-136 | 3200 | 50,47 | 2,62 | 11,84 |
| 3392 | 182155 | OR | NBR | 70 | 2-137 | 3206 | 52,07 | 2,62 | 12,40 |
| 3393 | 182156 | OR | NBR | 70 | 2-138 | 3212 | 53,65 | 2,62 | 12,88 |
| 3394 | 182157 | OR | NBR | 70 | 2-139 | 3218 | 55,25 | 2,62 | 13,37 |
| 3395 | 182158 | OR | NBR | 70 | 2-140 | 3225 | 56,82 | 2,62 | 13,85 |
| 3396 | | OR | NBR | 70 | 2-141 | 3231 | 58,42 | 2,62 | 14,40 |
| 3397 | 182160 | OR | NBR | 70 | 2-142 | 3237 | 60,00 | 2,62 | 14,81 |
| 3398 | 182161 | OR | NBR | 70 | 2-143 | 3243 | 61,60 | 2,62 | 15,37 |
| 3399 | 182162 | OR | NBR | 70 | 2-144 | 3250 | 63,17 | 2,62 | 15,86 |
| 3400 | 182163 | OR | NBR | 70 | 2-145 | 3256 | 64,77 | 2,62 | 16,34 |
| 3401 | 182164 | OR | NBR | 70 | 2-146 | 3262 | 66,35 | 2,62 | 16,83 |
| 3402 | 181814 | OR | NBR | 70 | 2-147 | 3268 | 67,95 | 2,62 | 17,38 |
| 3403 | 182165 | OR | NBR | 70 | 2-148 | 3275 | 69,52 | 2,62 | 17,80 |
| 3404 | 182166 | OR | NBR | 70 | 2-149 | 3281 | 71,12 | 2,62 | 18,35 |
| 3405 | 182167 | OR | NBR | 70 | 2-150 | 3287 | 72,69 | 2,62 | 19,80 |
| 3406 | 182168 | OR | NBR | 70 | 2-151 | 3300 | 75,87 | 2,62 | 21,40 |
| 3441 | | OR | NBR | 70 | | 3318 | 80,60 | 2,62 | 35,48 |
| 3407 | 182169 | OR | NBR | 70 | 2-152 | 3325 | 82,22 | 2,62 | 25,07 |
| 3408 | 182170 | OR | NBR | 70 | 2-153 | 3350 | 88,57 | 2,62 | 28,39 |
| 3409 | 182171 | OR | NBR | 70 | 2-154 | 3375 | 94,93 | 2,62 | 32,20 |
| 3410 | | OR | NBR | 70 | 2-155 | 3400 | 101,27 | 2,62 | 37,12 |
| 3411 | | OR | NBR | 70 | 2-156 | 3425 | 107,63 | 2,62 | 42,58 |
| 3412 | 182174 | OR | NBR | 70 | 2-157 | 3450 | 113,98 | 2,62 | 48,68 |
| 3413 | 182175 | OR | NBR | 70 | 2-158 | 3475 | 120,33 | 2,62 | 53,32 |
| 3414 | 182176 | OR | NBR | 70 | 2-159 | 3500 | 126,67 | 2,62 | 57,05 |
| 3415 | 182177 | OR | NBR | 70 | 2-160 | 3525 | 133,00 | 2,62 | 60,24 |
| 3416 | 182178 | OR | NBR | 70 | 2-161 | 3550 | 139,38 | 2,62 | 65,30 |
| 3417 | 182179 | OR | NBR | 70 | 2-162 | 3575 | 145,72 | 2,62 | 70,97 |
| 3418 | 182180 | OR | NBR | 70 | 2-163 | 3600 | 152,07 | 2,62 | 75,13 |
| 3419 | 182181 | OR | NBR | 70 | 2-164 | 3625 | 158,41 | 2,62 | 79,36 |
| 3420 | 182182 | OR | NBR | 70 | 2-165 | 3650 | 164,78 | 2,62 | 83,65 |
| 3421 | 182183 | OR | NBR | 70 | 2-166 | 3675 | 171,13 | 2,62 | 89,05 |
| 3422 | 182184 | OR | NBR | 70 | 2-167 | 3700 | 177,47 | 2,62 | 92,72 |
| 3423 | 182185 | OR | NBR | 70 | 2-168 | 3725 | 183,83 | 2,62 | 97,29 |
| 3424 | 182186 | OR | NBR | 70 | 2-169 | 3750 | 190,18 | 2,62 | 100,68 |
| 3425 | 182187 | OR | NBR | 70 | 2-170 | 3775 | 196,53 | 2,62 | 110,78 |
| 3426 | 182188 | OR | NBR | 70 | 2-171 | 3800 | 202,87 | 2,62 | 110,78 |
| 3427 | 182189 | OR | NBR | 70 | 2-172 | 3825 | 209,23 | 2,62 | 118,27 |
| 2065 | 181985 | OR | NBR | 70 | 2-173 | 3850 | 215,58 | 2,62 | 123,39 |
| 3429 | 182190 | OR | NBR | 70 | 2-174 | 3875 | 221,93 | 2,62 | 129,01 |
| 3430 | 182191 | OR | NBR | 70 | 2-175 | 3900 | 228,28 | 2,62 | 133,22 |
| 3431 | 182192 | OR | NBR | 70 | 2-176 | 3925 | 234,63 | 2,62 | 137,73 |
| 3432 | | OR | NBR | 70 | 2-177 | 3950 | 240,98 | 2,62 | 140,91 |
| 3433 | 182193 | OR | NBR | 70 | 2-178 | 3975 | 247,33 | 2,62 | 143,47 |
| 5070 | | OR | NBR | 70 | 2-201 | | 4,34 | 3,53 | 4,02 |
| 5071 | | OR | NBR | 70 | 2-202 | | 5,94 | 3,53 | 4,02 |

| CODICE | NUOVO CODICE | TIPO | MAT. | SH | RIFERIMENTI USA | RIFERIMENTI UK | d1 mm | d2 mm | LISTINO 5-2016 X 100 € |
|---|---|---|---|---|---|---|---|---|---|
| 3447 | | OR | NBR | 70 | 2-203 | 4028 | 7,52 | 3,53 | 4,02 |
| 3448 | 182200 | OR | NBR | 70 | 2-204 | 4036 | 9,12 | 3,53 | 4,15 |
| 3449 | 182201 | OR | NBR | 70 | 2-205 | 4042 | 10,69 | 3,53 | 4,29 |
| 3450 | 182202 | OR | NBR | 70 | 2-206 | 4050 | 12,29 | 3,53 | 4,43 |
| 3451 | 182203 | OR | NBR | 70 | 2-207 | 4055 | 13,87 | 3,53 | 4,64 |
| 3452 | 182204 | OR | NBR | 70 | 2-208 | 4061 | 15,47 | 3,53 | 4,85 |
| 5072 | 182657 | OR | NBR | 70 | 2-209 | 4067 | 17,04 | 3,53 | 4,98 |
| 3454 | 182206 | OR | NBR | 70 | 2-210 | 4075 125 | 18,64 | 3,53 | 5,12 |
| 3455 | 182207 | OR | NBR | 70 | 2-211 | 4081 126 | 20,22 | 3,53 | 5,54 |
| 3456 | 182208 | OR | NBR | 70 | 2-212 | 4087 129 | 21,82 | 3,53 | 5,95 |
| 3538 | 182284 | OR | NBR | 70 | 2-213 | 4093 131 | 23,40 | 3,53 | 6,30 |
| 3457 | | OR | NBR | 70 | 2-214 | 4100 133 | 24,99 | 3,53 | 6,58 |
| 3444 | | OR | NBR | 70 | 5-618 | 134 | 25,80 | 3,53 | 7,00 |
| 3458 | 182210 | OR | NBR | 70 | 2-215 | 4106 135 | 26,58 | 3,53 | 7,27 |
| 3459 | 182211 | OR | NBR | 70 | 2-216 | 4112 136 | 28,17 | 3,53 | 7,62 |
| 3460 | 182212 | OR | NBR | 70 | 2-217 | 4118 137 | 29,75 | 3,53 | 7,97 |
| 3461 | 182213 | OR | NBR | 70 | 2-218 | 4125 138 | 31,34 | 3,53 | 8,31 |
| 3462 | 182214 | OR | NBR | 70 | 2-219 | 4131 139 | 32,92 | 3,53 | 8,58 |
| 3463 | 182215 | OR | NBR | 70 | 2-220 | 4137 140 | 34,52 | 3,53 | 8,94 |
| 3464 | 182216 | OR | NBR | 70 | 2-221 | 4143 141 | 36,10 | 3,53 | 9,55 |
| 3465 | 182217 | OR | NBR | 70 | 2-222 | 4150 142 | 37,69 | 3,53 | 10,25 |
| 3445 | 182199 | OR | NBR | 70 | 5-321 | 144 | 39,69 | 3,53 | 10,60 |
| 3466 | 182218 | OR | NBR | 70 | 2-223 | 4162 | 40,87 | 3,53 | 11,08 |
| 3446 | | OR | NBR | 70 | 2-223 | 146 | 41,28 | 3,53 | 11,43 |
| 5075 | 182659 | OR | NBR | 70 | 5-332 | 147 | 42,86 | 3,53 | 11,70 |
| 3467 | 182219 | OR | NBR | 70 | 2-224 | 4175 | 44,04 | 3,53 | 12,12 |
| 5076 | 182660 | OR | NBR | 70 | | 149 | 44,45 | 3,53 | 12,40 |
| 5077 | | OR | NBR | 70 | 5-035 | 150 | 46,04 | 3,53 | 12,74 |
| 3468 | 182220 | OR | NBR | 70 | 2-225 | 4187 | 47,22 | 3,53 | 13,23 |
| 5078 | | OR | NBR | 70 | | 152 | 47,63 | 3,53 | 13,71 |
| 5079 | 182661 | OR | NBR | 70 | 5-701 | 153 | 49,21 | 3,53 | 14,06 |
| 3469 | 182221 | OR | NBR | 70 | 2-226 | 4200 | 50,40 | 3,53 | 14,81 |
| 5080 | | OR | NBR | 70 | | 155 | 50,80 | 3,53 | 15,23 |
| 3453 | 182205 | OR | NBR | 70 | 5-037 | 156 | 52,39 | 3,53 | 15,51 |
| 3470 | 182222 | OR | NBR | 70 | 2-227 | 4212 | 53,57 | 3,53 | 15,72 |
| 3524 | | OR | NBR | 70 | | 158 | 53,98 | 3,53 | 15,86 |
| 3525 | 182276 | OR | NBR | 70 | | 159 | 55,56 | 3,53 | 16,00 |
| 3471 | 182223 | OR | NBR | 70 | 2-228 | 4225 | 56,74 | 3,53 | 16,20 |
| 3526 | 182277 | OR | NBR | 70 | | 161 | 57,15 | 3,53 | 16,69 |
| 3527 | 182278 | OR | NBR | 70 | 5-702 | 162 | 58,74 | 3,53 | 17,10 |
| 3472 | 182224 | OR | NBR | 70 | 2-229 | 4237 | 59,92 | 3,53 | 17,52 |
| 3528 | | OR | NBR | 70 | | 164 | 60,33 | 3,53 | 18,00 |
| 3529 | 182279 | OR | NBR | 70 | 5-039 | 165 | 61,90 | 3,53 | 18,35 |
| 3473 | | OR | NBR | 70 | 2-230 | 4250 | 63,09 | 3,53 | 18,83 |
| 3530 | | OR | NBR | 70 | | 167 | 63,50 | 3,53 | 18,97 |
| 3531 | | OR | NBR | 70 | 5-703 | 168 | 65,10 | 3,53 | 19,12 |
| 3474 | 182226 | OR | NBR | 70 | 2-231 | 4262 | 66,27 | 3,53 | 19,66 |
| 3532 | 182280 | OR | NBR | 70 | | 170 | 66,67 | 3,53 | 19,66 |
| 3533 | 182281 | OR | NBR | 70 | 5-361 | 171 | 68,26 | 3,53 | 19,95 |

| CODICE | NUOVO CODICE | TIPO | MAT. | SH | RIFERIMENTI USA | RIFERIMENTI UK | d1 mm | d2 mm | LISTINO 5-2016 X 100 € |
|---|---|---|---|---|---|---|---|---|---|
| 3475 | | OR | NBR | 70 | 2-232 | 4275 | 69,44 | 3,53 | 20,35 |
| 3534 | | OR | NBR | 70 | | 173 | 69,85 | 3,53 | 20,63 |
| 3535 | | OR | NBR | 70 | 5-704 | 174 | 71,44 | 3,53 | 20,98 |
| 3476 | 182228 | OR | NBR | 70 | 2-233 | 4287 | 72,62 | 3,53 | 21,32 |
| 3536 | 182282 | OR | NBR | 70 | | 176 | 73,02 | 3,53 | 21,81 |
| 3537 | 182283 | OR | NBR | 70 | 5-705 | 177 | 74,60 | 3,53 | 22,29 |
| 3477 | 182229 | OR | NBR | 70 | 2-234 | 4300 | 75,80 | 3,53 | 22,64 |
| 3478 | 182230 | OR | NBR | 70 | 2-235 | 4312 | 78,97 | 3,53 | 23,47 |
| 3479 | 182231 | OR | NBR | 70 | 2-236 | 4325 | 82,14 | 3,53 | 24,24 |
| 3480 | 182232 | OR | NBR | 70 | 2-237 | 4337 | 85,32 | 3,53 | 24,93 |
| 3481 | 182233 | OR | NBR | 70 | 2-238 | 4350 | 88,50 | 3,53 | 25,61 |
| 3482 | 182234 | OR | NBR | 70 | 2-239 | 4362 | 91,67 | 3,53 | 26,04 |
| 3483 | 182235 | OR | NBR | 70 | 2-240 | 4375 | 94,84 | 3,53 | 26,87 |
| 3484 | 182236 | OR | NBR | 70 | 2-241 | 4387 | 98,02 | 3,53 | 28,18 |
| 3485 | 182237 | OR | NBR | 70 | 2-242 | 4400 | 101,20 | 3,53 | 30,75 |
| 3486 | 182238 | OR | NBR | 70 | 2-243 | 4412 | 104,37 | 3,53 | 31,99 |
| 3487 | | OR | NBR | 70 | 2-244 | 4425 | 107,54 | 3,53 | 32,82 |
| 3488 | 182240 | OR | NBR | 70 | 2-245 | 4437 | 110,72 | 3,53 | 33,86 |
| 3489 | 182241 | OR | NBR | 70 | 2-246 | 4450 | 113,90 | 3,53 | 35,45 |
| 3490 | | OR | NBR | 70 | 2-247 | 4462 | 117,07 | 3,53 | 38,98 |
| 3491 | 182243 | OR | NBR | 70 | 2-248 | 4475 | 120,25 | 3,53 | 41,41 |
| 3492 | 182244 | OR | NBR | 70 | 2-249 | 4487 | 123,42 | 3,53 | 43,70 |
| 3493 | | OR | NBR | 70 | 2-250 | 4500 | 126,60 | 3,53 | 46,67 |
| 3494 | 182246 | OR | NBR | 70 | 2-251 | 4512 | 129,77 | 3,53 | 49,24 |
| 3495 | 182247 | OR | NBR | 70 | 2-252 | 4525 | 132,94 | 3,53 | 50,21 |
| 3496 | 182248 | OR | NBR | 70 | 2-253 | 4537 | 136,12 | 3,53 | 52,62 |
| 3497 | | OR | NBR | 70 | 2-254 | 4550 | 139,30 | 3,53 | 54,91 |
| 3498 | | OR | NBR | 70 | 2-255 | 4562 | 142,47 | 3,53 | 56,92 |
| 3499 | 182251 | OR | NBR | 70 | 2-256 | 4575 | 145,65 | 3,53 | 58,93 |
| 3500 | 182252 | OR | NBR | 70 | 2-257 | 4587 | 148,82 | 3,53 | 63,50 |
| 3501 | 182253 | OR | NBR | 70 | 2-258 | 4600 | 151,99 | 3,53 | 66,68 |
| 3502 | 182254 | OR | NBR | 70 | 2-259 | 4625 | 158,35 | 3,53 | 70,56 |
| 3503 | 182255 | OR | NBR | 70 | 2-260 | 4650 | 164,70 | 3,53 | 76,65 |
| 3504 | 182256 | OR | NBR | 70 | 2-261 | 4675 | 171,05 | 3,53 | 79,22 |
| 3505 | 182257 | OR | NBR | 70 | 2-262 | 4700 | 177,40 | 3,53 | 83,23 |
| 3506 | 182258 | OR | NBR | 70 | 2-263 | 4725 | 183,75 | 3,53 | 90,57 |
| 4208 | 182535 | OR | NBR | 70 | 2-264 | 4750 | 190,10 | 3,53 | 95,97 |
| 3507 | 182259 | OR | NBR | 70 | 2-265 | 4775 | 196,44 | 3,53 | 100,40 |
| 3508 | 182260 | OR | NBR | 70 | 2-266 | 4800 | 202,79 | 3,53 | 103,11 |
| 3509 | 182261 | OR | NBR | 70 | 2-267 | 4825 | 209,14 | 3,53 | 107,54 |
| 3510 | 182262 | OR | NBR | 70 | 2-268 | 4850 | 215,49 | 3,53 | 109,69 |
| 3511 | 182263 | OR | NBR | 70 | 2-269 | 4875 | 221,84 | 3,53 | 114,32 |
| 3512 | 182264 | OR | NBR | 70 | 2-270 | 4900 | 228,19 | 3,53 | 118,75 |
| 3513 | 182265 | OR | NBR | 70 | 2-271 | 4925 | 234,54 | 3,53 | 121,73 |
| 3514 | 182266 | OR | NBR | 70 | 2-272 | 4950 | 240,89 | 3,53 | 129,98 |
| 3515 | 182267 | OR | NBR | 70 | 2-273 | 4975 | 247,24 | 3,53 | 132,26 |
| 3516 | 182268 | OR | NBR | 70 | 2-274 | 41000 | 253,59 | 3,53 | 134,41 |
| 3517 | 182269 | OR | NBR | 70 | 2-275 | 41050 | 266,30 | 3,53 | 147,62 |
| 3518 | 182270 | OR | NBR | 70 | 2-276 | 41100 | 279,00 | 3,53 | 159,82 |

| CODICE | NUOVO CODICE | TIPO | MAT. | SH | RIFERIMENTI USA | RIFERIMENTI UK | d1 mm | d2 mm | LISTINO 5-2016 X 100 € |
|---|---|---|---|---|---|---|---|---|---|
| 3519 | 182271 | OR | NBR | 70 | 2-277 | 41150 | 291,70 | 3,53 | 174,97 |
| 3520 | | OR | NBR | 70 | 2-278 | 41200 | 304,39 | 3,53 | 200,32 |
| 3521 | 182273 | OR | NBR | 70 | 2-279 | 41300 | 329,80 | 3,53 | 228,58 |
| 3522 | 182274 | OR | NBR | 70 | 2-280 | 41400 | 355,20 | 3,53 | 258,22 |
| 3523 | 182275 | OR | NBR | 70 | 2-281 | 41500 | 380,60 | 3,53 | 279,54 |
| 5222 | 182678 | OR | NBR | 70 | 2-282 | 41600 | 405,26 | 3,53 | 307,38 |
| 5226 | 182681 | OR | NBR | 70 | 2-283 | 41700 | 430,66 | 3,53 | 336,11 |
| 5235 | 182685 | OR | NBR | 70 | 2-284 | 41800 | 456,06 | 3,53 | 357,85 |
| 24466 | 182821 | OR | NBR | 70 | 2-309 | | 10,46 | 5,33 | 13,71 |
| 21417 | 182740 | OR | NBR | 70 | 2-310 | 6050 | 12,07 | 5,33 | 13,85 |
| 21418 | | OR | NBR | 70 | 2-311 | 6055 | 13,64 | 5,33 | 14,06 |
| 21419 | 182741 | OR | NBR | 70 | 2-312 | 6060 | 15,24 | 5,33 | 14,26 |
| 21420 | | OR | NBR | 70 | 2-313 | 6065 | 16,81 | 5,33 | 14,40 |
| 21421 | | OR | NBR | 70 | 2-314 | 6075 | 18,42 | 5,33 | 14,54 |
| 21422 | | OR | NBR | 70 | 2-315 | 6080 | 19,99 | 5,33 | 14,68 |
| 21423 | 182742 | OR | NBR | 70 | 2-316 | 6085 | 21,59 | 5,33 | 14,81 |
| 5073 | | OR | NBR | 70 | 2-317 | 6095 | 23,17 | 5,33 | 15,03 |
| 21424 | | OR | NBR | 70 | 2-318 | 6100 | 24,77 | 5,33 | 15,23 |
| 21425 | | OR | NBR | 70 | 2-319 | 6105 | 26,34 | 5,33 | 15,37 |
| 5074 | 182658 | OR | NBR | 70 | 2-320 | 6110 | 27,93 | 5,33 | 15,37 |
| 21426 | | OR | NBR | 70 | 2-321 | 6115 | 29,51 | 5,33 | 15,51 |
| 21427 | | OR | NBR | 70 | 2-322 | 6125 | 31,12 | 5,33 | 15,72 |
| 21428 | | OR | NBR | 70 | 2-323 | 6130 | 32,69 | 5,33 | 15,86 |
| 21429 | 182743 | OR | NBR | 70 | 2-324 | 6135 | 34,29 | 5,33 | 16,20 |
| 3564 | 182290 | OR | NBR | 70 | 2-325 | 6150 143 | 37,47 | 5,33 | 16,55 |
| 3565 | 182291 | OR | NBR | 70 | 2-326 | 6162 145 | 40,65 | 5,33 | 17,52 |
| 3566 | 182292 | OR | NBR | 70 | 2-327 | 6175 148 | 43,82 | 5,33 | 18,41 |
| 3567 | 182293 | OR | NBR | 70 | 2-328 | 6187 151 | 47,00 | 5,33 | 19,52 |
| 3568 | 182294 | OR | NBR | 70 | 2-329 | 6200 154 | 50,16 | 5,33 | 20,49 |
| 3569 | 182295 | OR | NBR | 70 | 2-330 | 6212 157 | 53,34 | 5,33 | 21,81 |
| 3570 | 182296 | OR | NBR | 70 | 2-331 | 6225 160 | 56,52 | 5,33 | 23,47 |
| 3571 | 182297 | OR | NBR | 70 | 2-332 | 6237 163 | 59,70 | 5,33 | 24,78 |
| 3572 | 182298 | OR | NBR | 70 | 2-333 | 6250 166 | 62,87 | 5,33 | 26,46 |
| 3573 | 182299 | OR | NBR | 70 | 2-334 | 6262 169 | 66,04 | 5,33 | 28,39 |
| 3574 | 182300 | OR | NBR | 70 | 2-335 | 6275 172 | 69,22 | 5,33 | 30,33 |
| 3575 | 182301 | OR | NBR | 70 | 2-336 | 6287 175 | 72,40 | 5,33 | 31,37 |
| 3539 | | OR | NBR | 70 | | 178 | 74,63 | 5,33 | 32,69 |
| 3576 | | OR | NBR | 70 | 2-337 | 6300 179 | 75,57 | 5,33 | 34,00 |
| 3577 | 182303 | OR | NBR | 70 | 2-338 | 6312 180 | 78,74 | 5,33 | 35,59 |
| 3540 | | OR | NBR | 70 | | 181 | 79,77 | 5,33 | 36,63 |
| 3578 | 182304 | OR | NBR | 70 | 2-339 | 6325 182 | 81,92 | 5,33 | 37,81 |
| 3579 | 182305 | OR | NBR | 70 | 2-340 | 6337 183 | 85,09 | 5,33 | 39,61 |
| 3580 | 182306 | OR | NBR | 70 | 2-341 | 6350 184 | 88,27 | 5,33 | 41,41 |
| 3541 | 182285 | OR | NBR | 70 | | 185 | 89,69 | 5,33 | 42,24 |
| 3581 | 182307 | OR | NBR | 70 | 3-342 | 6362 186 | 91,44 | 5,33 | 42,73 |
| 3582 | 182308 | OR | NBR | 70 | 2-343 | 6375 187 | 94,62 | 5,33 | 44,24 |
| 3583 | 182309 | OR | NBR | 70 | 2-344 | 6387 188 | 97,80 | 5,33 | 45,70 |
| 3542 | | OR | NBR | 70 | | 189 | 100,00 | 5,33 | 47,36 |
| 3584 | 182310 | OR | NBR | 70 | 2-345 | 6400 190 | 100,97 | 5,33 | 48,96 |

| CODICE | NUOVO CODICE | TIPO | MAT. | SH | RIFERIMENTI USA | RIFERIMENTI UK | d1 mm | d2 mm | LISTINO 5-2016 X 100 € |
|---|---|---|---|---|---|---|---|---|---|
| 3585 | 182311 | OR | NBR | 70 | 2-346 | 6412 191 | 104,14 | 5,33 | 49,65 |
| 3586 | 182312 | OR | NBR | 70 | 2-347 | 6425 192 | 107,32 | 5,33 | 50,21 |
| 3543 | | OR | NBR | 70 | | 193 | 109,54 | 5,33 | 50,82 |
| 3587 | 182313 | OR | NBR | 70 | 2-348 | 6437 194 | 110,49 | 5,33 | 51,31 |
| 3588 | 182314 | OR | NBR | 70 | 2-349 | 6450 195 | 113,67 | 5,33 | 51,93 |
| 3589 | 182315 | OR | NBR | 70 | 2-350 | | 116,84 | 5,33 | 53,32 |
| 3545 | | OR | NBR | 70 | | 199 | 117,48 | 5,33 | 54,01 |
| 3590 | 182316 | OR | NBR | 70 | 2-351 | | 120,02 | 5,33 | 55,12 |
| 3546 | | OR | NBR | 70 | | 201 | 120,70 | 5,33 | 55,95 |
| 3591 | | OR | NBR | 70 | 2-352 | | 123,20 | 5,33 | 57,13 |
| 3547 | | OR | NBR | 70 | | 203 | 123,80 | 5,33 | 57,61 |
| 3592 | 182318 | OR | NBR | 70 | 2-353 | | 126,37 | 5,33 | 60,24 |
| 3548 | | OR | NBR | 70 | | 206 | 127,00 | 5,33 | 61,00 |
| 3593 | | OR | NBR | 70 | 2-354 | | 129,54 | 5,33 | 63,36 |
| 3549 | | OR | NBR | 70 | | 208 | 130,18 | 5,33 | 64,05 |
| 3594 | 182320 | OR | NBR | 70 | 2-355 | | 132,72 | 5,33 | 65,16 |
| 3550 | | OR | NBR | 70 | | 210 | 133,35 | 5,33 | 65,93 |
| 3595 | 182321 | OR | NBR | 70 | 2-356 | | 135,90 | 5,33 | 67,02 |
| 3551 | | OR | NBR | 70 | | 213 | 136,53 | 5,33 | 67,51 |
| 3596 | 182322 | OR | NBR | 70 | 2-357 | | 139,07 | 5,33 | 69,25 |
| 3552 | | OR | NBR | 70 | | 215 | 139,70 | 5,33 | 69,94 |
| 3597 | | OR | NBR | 70 | 2-358 | | 142,24 | 5,33 | 71,88 |
| 3553 | | OR | NBR | 70 | | 217 | 142,88 | 5,33 | 72,57 |
| 3598 | 182324 | OR | NBR | 70 | 2-359 | | 145,42 | 5,33 | 74,79 |
| 3554 | 182286 | OR | NBR | 70 | | 219 | 146,05 | 5,33 | 75,82 |
| 3599 | 182325 | OR | NBR | 70 | 2-360 | | 148,60 | 5,33 | 78,17 |
| 3555 | 192127 | OR | NBR | 70 | | 221 | 149,23 | 5,33 | 78,87 |
| 3600 | 182326 | OR | NBR | 70 | 2-361 | 6600 | 151,77 | 5,33 | 94,72 |
| 3601 | 182327 | OR | NBR | 70 | 2-362 | 6625 | 158,12 | 5,33 | 103,11 |
| 3602 | | OR | NBR | 70 | 2-363 | 6645 | 164,47 | 5,33 | 110,78 |
| 3603 | 182329 | OR | NBR | 70 | 2-364 | 6670 | 170,82 | 5,33 | 116,33 |
| 3604 | 182330 | OR | NBR | 70 | 2-365 | 6700 | 177,17 | 5,33 | 119,86 |
| 3605 | 180284 | OR | NBR | 70 | 2-366 | 6720 | 183,52 | 5,33 | 123,39 |
| 3606 | 182331 | OR | NBR | 70 | 2-367 | 6745 | 189,87 | 5,33 | 126,99 |
| 3607 | 182332 | OR | NBR | 70 | 2-368 | 6775 | 196,22 | 5,33 | 138,35 |
| 3608 | 182333 | OR | NBR | 70 | 2-369 | 6795 | 202,57 | 5,33 | 144,02 |
| 3609 | 182334 | OR | NBR | 70 | 2-370 | 6820 | 208,92 | 5,33 | 148,18 |
| 3610 | 182335 | OR | NBR | 70 | 2-371 | 6850 | 215,27 | 5,33 | 155,80 |
| 3611 | 182336 | OR | NBR | 70 | 2-372 | 6870 | 221,62 | 5,33 | 161,34 |
| 3612 | 182337 | OR | NBR | 70 | 2-373 | 6895 | 227,97 | 5,33 | 163,07 |
| 3613 | 182338 | OR | NBR | 70 | 2-374 | 6920 | 234,32 | 5,33 | 165,49 |
| 3614 | 182339 | OR | NBR | 70 | 2-375 | 6945 | 240,67 | 5,33 | 169,30 |
| 3615 | 182340 | OR | NBR | 70 | 2-376 | 6975 | 247,02 | 5,33 | 173,80 |
| 3616 | 182341 | OR | NBR | 70 | 2-377 | 6995 | 253,57 | 5,33 | 177,96 |
| 3617 | 182342 | OR | NBR | 70 | 2-378 | 61050 | 266,07 | 5,33 | 183,85 |
| 3618 | | OR | NBR | 70 | 2-379 | 61100 | 278,77 | 5,33 | 200,46 |
| 3619 | 182344 | OR | NBR | 70 | 2-380 | 61150 | 291,47 | 5,33 | 217,78 |
| 3620 | 182345 | OR | NBR | 70 | 2-381 | 61200 | 304,17 | 5,33 | 237,85 |
| 3621 | 182346 | OR | NBR | 70 | 2-382 | 61300 | 329,57 | 5,33 | 264,17 |

| CODICE | NUOVO CODICE | TIPO | MAT. | SH | RIFERIMENTI USA | RIFERIMENTI UK | d1 mm | d2 mm | LISTINO 5-2016 X 100 € |
|---|---|---|---|---|---|---|---|---|---|
| 3622 | 182347 | OR | NBR | 70 | 2-383 | 61400 | 354,97 | 5,33 | 299,13 |
| 3623 | 182348 | OR | NBR | 70 | 2-384 | 61500 | 380,37 | 5,33 | 379,92 |
| 3624 | 182349 | OR | NBR | 70 | 2-385 | 61600 | 405,26 | 5,33 | 392,95 |
| 5227 | 182682 | OR | NBR | 70 | 2-386 | 61700 | 430,66 | 5,33 | 419,96 |
| 5236 | 182686 | OR | NBR | 70 | 2-387 | 61800 | 456,06 | 5,33 | 513,79 |
| 5241 | 182688 | OR | NBR | 70 | 2-388 | 61900 | 481,46 | 5,33 | 645,77 |
| 21353 | 182729 | OR | NBR | 70 | 2-389 | 62000 | 506,81 | 5,33 | 691,67 |
| 5293 | 182695 | OR | NBR | 70 | 2-390 | 62100 | 532,20 | 5,33 | 770,41 |
| 21431 | 182744 | OR | NBR | 70 | 2-391 | 62200 | 557,61 | 5,33 | 860,63 |
| 21432 | | OR | NBR | 70 | 2-392 | 62300 | 582,68 | 5,33 | 961,10 |
| 21433 | | OR | NBR | 70 | 2-393 | 62400 | 608,08 | 5,33 | 1.127,29 |
| 21434 | | OR | NBR | 70 | 2-394 | 62500 | 633,48 | 5,33 | 1.325,32 |
| 21435 | 182748 | OR | NBR | 70 | 2-395 | 62600 | 658,88 | 5,33 | 1.553,84 |
| 3644 | 182357 | OR | NBR | 70 | 2-425 | 8450 196 | 113,67 | 6,99 | 78,80 |
| 3628 | | OR | NBR | 70 | | 197 | 114,70 | 6,99 | 79,36 |
| 3645 | 182358 | OR | NBR | 70 | 2-426 | 8462 198 | 116,84 | 6,99 | 80,53 |
| 3646 | 182359 | OR | NBR | 70 | 2-427 | 8475 200 | 120,02 | 6,99 | 80,94 |
| 3647 | 182360 | OR | NBR | 70 | 2-428 | 8487 202 | 123,20 | 6,99 | 87,03 |
| 3629 | 182350 | OR | NBR | 70 | | 204 | 124,60 | 6,99 | 89,05 |
| 3648 | 182361 | OR | NBR | 70 | 2-429 | 8500 205 | 126,37 | 6,99 | 90,71 |
| 3649 | 182362 | OR | NBR | 70 | 2-430 | 8512 207 | 129,54 | 6,99 | 94,03 |
| 3650 | 182363 | OR | NBR | 70 | 2-431 | 8525 209 | 132,72 | 6,99 | 97,15 |
| 3630 | 194622 | OR | NBR | 70 | | 211 | 134,50 | 6,99 | 98,46 |
| 3651 | 182364 | OR | NBR | 70 | 2-432 | 8537 212 | 135,90 | 6,99 | 100,26 |
| 3652 | | OR | NBR | 70 | 2-433 | 8550 214 | 139,07 | 6,99 | 101,09 |
| 3653 | 182366 | OR | NBR | 70 | 2-434 | 8562 216 | 142,24 | 6,99 | 103,11 |
| 3654 | 182367 | OR | NBR | 70 | 2-435 | 8575 218 | 145,42 | 6,99 | 105,26 |
| 3655 | 182368 | OR | NBR | 70 | 2-436 | 8587 220 | 148,60 | 6,99 | 106,71 |
| 3656 | 182369 | OR | NBR | 70 | 2-437 | 8600 222 | 151,77 | 6,99 | 108,37 |
| 3631 | | OR | NBR | 70 | | 223 | 155,60 | 6,99 | 111,97 |
| 3657 | 182370 | OR | NBR | 70 | 2-438 | 8625 224 | 158,12 | 6,99 | 114,18 |
| 3632 | 182351 | OR | NBR | 70 | | 225 | 159,50 | 6,99 | 116,33 |
| 3633 | | OR | NBR | 70 | | 226 | 161,90 | 6,99 | 118,75 |
| 3658 | 182371 | OR | NBR | 70 | 2-439 | 8650 227 | 164,47 | 6,99 | 121,24 |
| 3634 | | OR | NBR | 70 | | 228 | 166,70 | 6,99 | 123,74 |
| 3635 | 182352 | OR | NBR | 70 | | 229 | 168,30 | 6,99 | 126,30 |
| 3659 | 182372 | OR | NBR | 70 | 2-440 | 8675 230 | 170,82 | 6,99 | 129,27 |
| 3636 | 182353 | OR | NBR | 70 | | 231 | 174,60 | 6,99 | 131,98 |
| 3660 | 182373 | OR | NBR | 70 | 2-441 | 8700 232 | 177,17 | 6,99 | 134,41 |
| 3637 | | OR | NBR | 70 | | 233 | 181,00 | 6,99 | 138,49 |
| 3661 | 182374 | OR | NBR | 70 | 2-442 | 8725 234 | 183,52 | 6,99 | 139,87 |
| 3638 | 182354 | OR | NBR | 70 | | 235 | 187,30 | 6,99 | 141,19 |
| 3662 | 182375 | OR | NBR | 70 | 2-443 | 8750 236 | 189,87 | 6,99 | 142,64 |
| 3639 | | OR | NBR | 70 | | 237 | 193,70 | 6,99 | 143,82 |
| 3663 | 182376 | OR | NBR | 70 | 2-444 | 8775 238 | 196,22 | 6,99 | 145,76 |
| 3640 | | OR | NBR | 70 | | 239 | 199,80 | 6,99 | 147,42 |
| 3664 | 182377 | OR | NBR | 70 | 2-445 | 8800 240 | 202,57 | 6,99 | 149,30 |
| 3641 | | OR | NBR | 70 | | 8825 241 | 208,92 | 6,99 | 151,02 |
| 3665 | 182378 | OR | NBR | 70 | 2-446 | 8850 242 | 215,27 | 6,99 | 156,70 |

| CODICE | NUOVO CODICE | TIPO | MAT. | SH | RIFERIMENTI USA | RIFERIMENTI UK | | d1 mm | d2 mm | LISTINO 5-2016 X 100 € |
|---|---|---|---|---|---|---|---|---|---|---|
| 3642 | 182355 | OR | NBR | 70 | | 8875 | 243 | 221,62 | 6,99 | 162,51 |
| 3666 | | OR | NBR | 70 | 2-447 | 8900 | 244 | 227,97 | 6,99 | 168,19 |
| 3643 | 182356 | OR | NBR | 70 | | 8925 | 245 | 234,32 | 6,99 | 174,14 |
| 3667 | 182380 | OR | NBR | 70 | 2-448 | 8950 | 246 | 240,67 | 6,99 | 180,59 |
| 5009 | 187281 | OR | NBR | 70 | | 8975 | 247 | 247,00 | 6,99 | 189,66 |
| 3668 | 182381 | OR | NBR | 70 | 2-449 | 81000 | 248 | 253,57 | 6,99 | 199,57 |
| 5011 | 182646 | OR | NBR | 70 | | 81025 | 249 | 259,70 | 6,99 | 215,85 |
| 3669 | 182382 | OR | NBR | 70 | 2-450 | 81050 | 250 | 266,07 | 6,99 | 224,95 |
| 5019 | 187282 | OR | NBR | 70 | | 81075 | 251 | 272,40 | 6,99 | 229,64 |
| 3670 | 182383 | OR | NBR | 70 | 2-451 | 81100 | 252 | 278,77 | 6,99 | 234,73 |
| 5021 | 187283 | OR | NBR | 70 | | 81125 | 253 | 285,10 | 6,99 | 243,74 |
| 3671 | 182384 | OR | NBR | 70 | 2-452 | 81150 | 254 | 291,47 | 6,99 | 255,30 |
| 5025 | 194623 | OR | NBR | 70 | | 81175 | 255 | 297,80 | 6,99 | 265,00 |
| 3672 | 182385 | OR | NBR | 70 | 2-453 | 81200 | 256 | 304,17 | 6,99 | 277,05 |
| 3673 | 182386 | OR | NBR | 70 | 2-454 | 81250 | 257 | 316,87 | 6,99 | 287,78 |
| 3674 | 182387 | OR | NBR | 70 | 2-455 | 81300 | 258 | 329,57 | 6,99 | 301,98 |
| 3675 | 182388 | OR | NBR | 70 | 2-456 | 81350 | 259 | 342,27 | 6,99 | 316,65 |
| 3676 | 182389 | OR | NBR | 70 | 2-457 | 81400 | 260 | 354,97 | 6,99 | 331,54 |
| 3677 | 182390 | OR | NBR | 70 | 2-458 | 81450 | 261 | 367,67 | 6,99 | 343,04 |
| 3678 | 182391 | OR | NBR | 70 | 2-459 | 81500 | 262 | 380,37 | 6,99 | 361,94 |
| 3679 | 182392 | OR | NBR | 70 | 2-460 | 81550 | 263 | 393,07 | 6,99 | 387,55 |
| 5223 | 182679 | OR | NBR | 70 | 2-461 | 81600 | | 405,26 | 6,99 | 446,07 |
| 5224 | 182680 | OR | NBR | 70 | 2-462 | 81650 | | 417,96 | 6,99 | 484,71 |
| 5228 | 182683 | OR | NBR | 70 | 2-463 | 81700 | | 430,66 | 6,99 | 512,89 |
| 5231 | 182684 | OR | NBR | 70 | 2-464 | 81750 | | 443,36 | 6,99 | 563,17 |
| 5237 | 182687 | OR | NBR | 70 | 2-465 | 81800 | | 456,06 | 6,99 | 613,44 |
| 5069 | 182656 | OR | NBR | 70 | 2-466 | 81850 | | 468,76 | 6,99 | 654,63 |
| 5242 | 182689 | OR | NBR | 70 | 2-467 | 81900 | | 481,46 | 6,99 | 691,75 |
| 5243 | 182690 | OR | NBR | 70 | 2-468 | 81950 | | 494,16 | 6,99 | 773,46 |
| 21354 | 182730 | OR | NBR | 70 | 2-469 | 82000 | | 506,86 | 6,99 | 804,76 |
| 21355 | 182731 | OR | NBR | 70 | 2-470 | 82100 | | 532,26 | 6,99 | 765,98 |
| 21356 | | OR | NBR | 70 | 2-471 | 82200 | | 557,66 | 6,99 | 922,60 |
| 21357 | 182733 | OR | NBR | 70 | 2-472 | 82300 | | 582,68 | 6,99 | 1.044,69 |
| 21358 | | OR | NBR | 70 | 2-473 | 82400 | | 608,08 | 6,99 | 1.218,63 |
| 21359 | 182735 | OR | NBR | 70 | 2-474 | 82500 | | 633,48 | 6,99 | 1.423,10 |
| 21360 | 182736 | OR | NBR | 70 | 2-475 | 82600 | | 658,88 | 6,99 | 1.688,86 |
| | | | | METRIC STANDARD | | | | | | |
| 5516 | | OR | NBR | 70 | | | | 1,15 | 1,00 | 2,77 |
| 3889 | | OR | NBR | 70 | | | | 1,50 | 1,00 | 2,77 |
| 4897 | | OR | NBR | 70 | | | | 1,80 | 1,00 | 2,77 |
| 3892 | 192592 | OR | NBR | 70 | | | | 2,00 | 1,00 | 2,83 |
| 3897 | | OR | NBR | 70 | | | | 2,50 | 1,00 | 2,83 |
| 3907 | 182476 | OR | NBR | 70 | | | | 3,00 | 1,00 | 2,83 |
| 3914 | | OR | NBR | 70 | | | | 3,50 | 1,00 | 2,91 |
| 3921 | | OR | NBR | 70 | | | | 4,00 | 1,00 | 3,05 |
| 4006 | | OR | NBR | 70 | | | | 4,50 | 1,00 | 3,12 |
| 3932 | | OR | NBR | 70 | | | | 5,00 | 1,00 | 3,12 |
| 5121 | 182667 | OR | NBR | 70 | | | | 5,50 | 1,00 | 3,18 |
| 3944 | | OR | NBR | 70 | | | | 6,00 | 1,00 | 3,26 |

| CODICE | NUOVO CODICE | TIPO | MAT. | SH | RIFERIMENTI USA | RIFERIMENTI UK | d1 mm | d2 mm | LISTINO 5-2016 X 100 € |
|---|---|---|---|---|---|---|---|---|---|
| 23406 | | OR | NBR | 70 | | | 6,50 | 1,00 | 3,32 |
| 3956 | 182488 | OR | NBR | 70 | | | 7,00 | 1,00 | 3,46 |
| 41641 | 182850 | OR | NBR | 70 | | | 7,50 | 1,00 | 3,54 |
| 3967 | | OR | NBR | 70 | | | 8,00 | 1,00 | 3,60 |
| 5127 | 182669 | OR | NBR | 70 | | | 8,50 | 1,00 | 3,66 |
| 3986 | 182495 | OR | NBR | 70 | | | 9,00 | 1,00 | 3,74 |
| 23036 | 182758 | OR | NBR | 70 | | | 9,50 | 1,00 | 3,74 |
| 4008 | | OR | NBR | 70 | | | 10,00 | 1,00 | 3,81 |
| 41663 | | OR | NBR | 70 | | | 10,50 | 1,00 | 3,81 |
| 4020 | | OR | NBR | 70 | | | 11,00 | 1,00 | 3,88 |
| 23455 | | OR | NBR | 70 | | | 11,50 | 1,00 | 3,88 |
| 4032 | | OR | NBR | 70 | | | 12,00 | 1,00 | 3,95 |
| 23464 | 182785 | OR | NBR | 70 | | | 12,50 | 1,00 | 4,02 |
| 4045 | | OR | NBR | 70 | | | 13,00 | 1,00 | 4,09 |
| 41690 | | OR | NBR | 70 | | | 13,50 | 1,00 | 4,15 |
| 4061 | | OR | NBR | 70 | | | 14,00 | 1,00 | 4,23 |
| 23478 | | OR | NBR | 70 | | | 14,50 | 1,00 | 4,37 |
| 4070 | | OR | NBR | 70 | | | 15,00 | 1,00 | 4,57 |
| 41702 | | OR | NBR | 70 | | | 15,50 | 1,00 | 4,71 |
| 4086 | 182509 | OR | NBR | 70 | | | 16,00 | 1,00 | 4,78 |
| 41711 | | OR | NBR | 70 | | | 16,50 | 1,00 | 4,85 |
| 4143 | | OR | NBR | 70 | | | 17,00 | 1,00 | 4,92 |
| 41723 | | OR | NBR | 70 | | | 17,50 | 1,00 | 4,98 |
| 4112 | 182518 | OR | NBR | 70 | | | 18,00 | 1,00 | 5,26 |
| 585 | | OR | NBR | 70 | | | 18,50 | 1,00 | 5,40 |
| 4144 | | OR | NBR | 70 | | | 19,00 | 1,00 | 5,68 |
| 5161 | 182674 | OR | NBR | 70 | | | 19,50 | 1,00 | 6,09 |
| 4145 | | OR | NBR | 70 | | | 20,00 | 1,00 | 6,37 |
| 41778 | | OR | NBR | 70 | | | 20,50 | 1,00 | 6,65 |
| 620 | | OR | NBR | 70 | | | 21,00 | 1,00 | 6,78 |
| 629 | | OR | NBR | 70 | | | 21,50 | 1,00 | 6,92 |
| 4920 | | OR | NBR | 70 | | | 22,00 | 1,00 | 7,06 |
| 24080 | | OR | NBR | 70 | | | 22,50 | 1,00 | 7,41 |
| 654 | | OR | NBR | 70 | | | 23,00 | 1,00 | 7,62 |
| 24081 | | OR | NBR | 70 | | | 23,50 | 1,00 | 7,75 |
| 672 | | OR | NBR | 70 | | | 24,00 | 1,00 | 8,03 |
| 41817 | | OR | NBR | 70 | | | 24,50 | 1,00 | 8,17 |
| 22741 | | OR | NBR | 70 | | | 25,00 | 1,00 | 8,31 |
| 20916 | | OR | NBR | 70 | | | 0,73 | 1,02 | 2,77 |
| | | OR | NBR | 70 | | | 0,74 | 1,02 | - |
| 5441 | | OR | NBR | 70 | | | 1,78 | 1,02 | 2,77 |
| 3281 | | OR | NBR | 70 | | | 1,07 | 1,27 | 2,77 |
| 21529 | | OR | NBR | 70 | | | 4,70 | 1,42 | 3,12 |
| 3891 | | OR | NBR | 70 | | | 1,85 | 1,50 | 2,77 |
| 3893 | | OR | NBR | 70 | | | 2,00 | 1,50 | 2,77 |
| 3898 | 193585 | OR | NBR | 70 | | | 2,50 | 1,50 | 2,77 |
| 23299 | | OR | NBR | 70 | | | 2,80 | 1,50 | 2,77 |
| 3908 | 182477 | OR | NBR | 70 | | | 3,00 | 1,50 | 2,91 |
| 3915 | | OR | NBR | 70 | | | 3,50 | 1,50 | 2,91 |

| CODICE | NUOVO CODICE | TIPO | MAT. | SH | RIFERIMENTI USA | RIFERIMENTI UK | d1 mm | d2 mm | LISTINO 5-2016 X 100 € |
|---|---|---|---|---|---|---|---|---|---|
| 3923 | 182479 | OR | NBR | 70 | | | 4,00 | 1,50 | 3,12 |
| 3929 | | OR | NBR | 70 | | | 4,50 | 1,50 | 3,12 |
| 3934 | 182481 | OR | NBR | 70 | | | 5,00 | 1,50 | 3,26 |
| 3939 | | OR | NBR | 70 | | | 5,50 | 1,50 | 3,46 |
| 3945 | 182486 | OR | NBR | 70 | | | 6,00 | 1,50 | 3,46 |
| 4906 | | OR | NBR | 70 | | | 6,50 | 1,50 | 3,46 |
| 3957 | | OR | NBR | 70 | | | 7,00 | 1,50 | 3,60 |
| 3962 | 192055 | OR | NBR | 70 | | | 7,50 | 1,50 | 3,60 |
| 3969 | | OR | NBR | 70 | | | 8,00 | 1,50 | 3,74 |
| 3980 | | OR | NBR | 70 | | | 8,50 | 1,50 | 3,74 |
| 3987 | | OR | NBR | 70 | | | 9,00 | 1,50 | 3,74 |
| 3996 | | OR | NBR | 70 | | | 9,50 | 1,50 | 3,74 |
| 4009 | | OR | NBR | 70 | | | 10,00 | 1,50 | 3,74 |
| 4018 | | OR | NBR | 70 | | | 10,50 | 1,50 | 3,88 |
| 4021 | | OR | NBR | 70 | | | 11,00 | 1,50 | 3,88 |
| 4028 | 182501 | OR | NBR | 70 | | | 11,50 | 1,50 | 3,88 |
| 4033 | 182502 | OR | NBR | 70 | | | 12,00 | 1,50 | 3,88 |
| 4043 | | OR | NBR | 70 | | | 12,50 | 1,50 | 4,02 |
| 4047 | 191380 | OR | NBR | 70 | | | 13,00 | 1,50 | 4,15 |
| 5517 | | OR | NBR | 70 | | | 13,50 | 1,50 | 4,29 |
| 4062 | | OR | NBR | 70 | | | 14,00 | 1,50 | 4,49 |
| 527 | | OR | NBR | 70 | | | 14,50 | 1,50 | 4,71 |
| 4071 | | OR | NBR | 70 | | | 15,00 | 1,50 | 4,71 |
| 5552 | | OR | NBR | 70 | | | 15,50 | 1,50 | 4,85 |
| 4088 | 182510 | OR | NBR | 70 | | | 16,00 | 1,50 | 4,98 |
| 5148 | | OR | NBR | 70 | | | 16,50 | 1,50 | 5,12 |
| 4100 | 182514 | OR | NBR | 70 | | | 17,00 | 1,50 | 5,26 |
| 5476 | | OR | NBR | 70 | | | 17,50 | 1,50 | 5,26 |
| 4113 | | OR | NBR | 70 | | | 18,00 | 1,50 | 5,26 |
| 5555 | | OR | NBR | 70 | | | 18,50 | 1,50 | 5,40 |
| 4125 | | OR | NBR | 70 | | | 19,00 | 1,50 | 5,68 |
| 4133 | | OR | NBR | 70 | | | 19,50 | 1,50 | 6,23 |
| 4147 | | OR | NBR | 70 | | | 20,00 | 1,50 | 6,65 |
| 41779 | | OR | NBR | 70 | | | 20,50 | 1,50 | 6,78 |
| 4157 | | OR | NBR | 70 | | | 21,00 | 1,50 | 6,92 |
| 5167 | | OR | NBR | 70 | | | 21,50 | 1,50 | 7,27 |
| 4163 | | OR | NBR | 70 | | | 22,00 | 1,50 | 7,48 |
| 41794 | | OR | NBR | 70 | | | 22,50 | 1,50 | 7,62 |
| 4171 | | OR | NBR | 70 | | | 23,00 | 1,50 | 7,75 |
| 41806 | | OR | NBR | 70 | | | 23,50 | 1,50 | 7,89 |
| 4180 | 182529 | OR | NBR | 70 | | | 24,00 | 1,50 | 8,03 |
| 41818 | | OR | NBR | 70 | | | 24,50 | 1,50 | 8,17 |
| 4188 | | OR | NBR | 70 | | | 25,00 | 1,50 | 8,52 |
| 23532 | | OR | NBR | 70 | | | 25,50 | 1,50 | 8,86 |
| 4200 | 182533 | OR | NBR | 70 | | | 26,00 | 1,50 | 9,28 |
| 41837 | | OR | NBR | 70 | | | 26,50 | 1,50 | 9,42 |
| 4211 | | OR | NBR | 70 | | | 27,00 | 1,50 | 9,55 |
| 730 | | OR | NBR | 70 | | | 27,50 | 1,50 | 9,69 |
| 4218 | 194357 | OR | NBR | 70 | | | 28,00 | 1,50 | 9,90 |

| CODICE | NUOVO CODICE | TIPO | MAT. | SH | RIFERIMENTI USA | RIFERIMENTI UK | d1 mm | d2 mm | LISTINO 5-2016 X 100 € |
|---|---|---|---|---|---|---|---|---|---|
| 41854 | | OR | NBR | 70 | | | 28,50 | 1,50 | 10,04 |
| 192779 | | OR | NBR | 70 | | | 29,00 | 1,50 | 10,18 |
| 4232 | 182541 | OR | NBR | 70 | | | 29,50 | 1,50 | 10,38 |
| 4924 | 182638 | OR | NBR | 70 | | | 30,00 | 1,50 | 10,52 |
| 41867 | | OR | NBR | 70 | | | 30,50 | 1,50 | 10,66 |
| 2781 | 182059 | OR | NBR | 70 | | | 31,00 | 1,50 | 10,80 |
| 786 | 181888 | OR | NBR | 70 | | | 31,50 | 1,50 | 10,94 |
| 4252 | 193686 | OR | NBR | 70 | | | 32,00 | 1,50 | 11,15 |
| 41882 | | OR | NBR | 70 | | | 32,50 | 1,50 | 11,29 |
| 806 | | OR | NBR | 70 | | | 33,00 | 1,50 | 11,43 |
| 41892 | | OR | NBR | 70 | | | 33,50 | 1,50 | 11,57 |
| 2649 | 182049 | OR | NBR | 70 | | | 34,00 | 1,50 | 11,77 |
| 41898 | | OR | NBR | 70 | | | 34,50 | 1,50 | 11,91 |
| 4277 | | OR | NBR | 70 | | | 35,00 | 1,50 | 12,05 |
| 87322 | | OR | NBR | 70 | | | 35,50 | 1,50 | 12,18 |
| 4286 | | OR | NBR | 70 | | | 36,00 | 1,50 | 12,40 |
| 87323 | | OR | NBR | 70 | | | 36,50 | 1,50 | 12,54 |
| 4296 | | OR | NBR | 70 | | | 37,00 | 1,50 | 12,67 |
| 41918 | | OR | NBR | 70 | | | 37,50 | 1,50 | 12,81 |
| 869 | 181896 | OR | NBR | 70 | | | 38,00 | 1,50 | 12,95 |
| 41932 | | OR | NBR | 70 | | | 38,50 | 1,50 | 13,09 |
| 883 | | OR | NBR | 70 | | | 39,00 | 1,50 | 13,29 |
| 895 | 181899 | OR | NBR | 70 | | | 39,50 | 1,50 | 13,43 |
| 4322 | 182557 | OR | NBR | 70 | | | 40,00 | 1,50 | 13,57 |
| 4331 | | OR | NBR | 70 | | | 41,00 | 1,50 | 13,78 |
| 4338 | 192443 | OR | NBR | 70 | | | 42,00 | 1,50 | 13,92 |
| 4345 | 182559 | OR | NBR | 70 | | | 43,00 | 1,50 | 14,20 |
| 40582 | | OR | NBR | 70 | | | 44,00 | 1,50 | 14,68 |
| 4364 | | OR | NBR | 70 | | | 45,00 | 1,50 | 15,44 |
| 4373 | 188707 | OR | NBR | 70 | | | 46,00 | 1,50 | 15,86 |
| 4379 | 182566 | OR | NBR | 70 | | | 47,00 | 1,50 | 16,41 |
| 4386 | | OR | NBR | 70 | | | 48,00 | 1,50 | 16,97 |
| 4393 | 194021 | OR | NBR | 70 | | | 49,00 | 1,50 | 17,66 |
| 1015 | | OR | NBR | 70 | | | 50,00 | 1,50 | 18,21 |
| 36267 | 179912 | OR | NBR | 70 | | | 51,00 | 1,50 | 18,90 |
| 4937 | 190570 | OR | NBR | 70 | | | 52,00 | 1,50 | 19,18 |
| 4412 | | OR | NBR | 70 | | | 53,00 | 1,50 | 19,26 |
| 5185 | | OR | NBR | 70 | | | 54,00 | 1,50 | 19,38 |
| 4422 | | OR | NBR | 70 | | | 55,00 | 1,50 | 19,52 |
| 42002 | | OR | NBR | 70 | | | 56,00 | 1,50 | 19,73 |
| 4433 | | OR | NBR | 70 | | | 57,00 | 1,50 | 19,80 |
| 42011 | | OR | NBR | 70 | | | 58,00 | 1,50 | 19,95 |
| 4444 | | OR | NBR | 70 | | | 59,00 | 1,50 | 20,09 |
| 4447 | 182578 | OR | NBR | 70 | | | 60,00 | 1,50 | 20,29 |
| 42024 | | OR | NBR | 70 | | | 61,00 | 1,50 | 20,78 |
| 4942 | | OR | NBR | 70 | | | 62,00 | 1,50 | 21,32 |
| 1174 | | OR | NBR | 70 | | | 63,00 | 1,50 | 21,89 |
| 42043 | 182875 | OR | NBR | 70 | | | 64,00 | 1,50 | 22,44 |
| 4470 | | OR | NBR | 70 | | | 65,00 | 1,50 | 22,92 |

| CODICE | NUOVO CODICE | TIPO | MAT. | SH | RIFERIMENTI USA | RIFERIMENTI UK | d1 mm | d2 mm | LISTINO 5-2016 X 100 € |
|---|---|---|---|---|---|---|---|---|---|
| 42059 | | OR | NBR | 70 | | | 66,00 | 1,50 | 23,55 |
| 1216 | 181929 | OR | NBR | 70 | | | 67,00 | 1,50 | 24,10 |
| 42109 | | OR | NBR | 70 | | | 68,00 | 1,50 | 24,72 |
| 1230 | | OR | NBR | 70 | | | 69,00 | 1,50 | 25,21 |
| 42118 | | OR | NBR | 70 | | | 70,00 | 1,50 | 25,76 |
| 87329 | | OR | NBR | 70 | | | 71,00 | 1,50 | 26,10 |
| 1258 | | OR | NBR | 70 | | | 72,00 | 1,50 | 26,32 |
| 42132 | | OR | NBR | 70 | | | 73,00 | 1,50 | 26,59 |
| 1271 | 181933 | OR | NBR | 70 | | | 74,00 | 1,50 | 26,80 |
| 42141 | | OR | NBR | 70 | | | 75,00 | 1,50 | 27,07 |
| 1290 | | OR | NBR | 70 | | | 76,00 | 1,50 | 27,42 |
| 42150 | | OR | NBR | 70 | | | 77,00 | 1,50 | 27,70 |
| 1308 | | OR | NBR | 70 | | | 78,00 | 1,50 | 27,98 |
| 42157 | | OR | NBR | 70 | | | 79,00 | 1,50 | 28,32 |
| 1322 | | OR | NBR | 70 | | | 80,00 | 1,50 | 28,53 |
| 40626 | 182848 | OR | NBR | 70 | | | 81,00 | 1,50 | 30,40 |
| 42177 | 182880 | OR | NBR | 70 | | | 82,00 | 1,50 | 31,37 |
| 42182 | | OR | NBR | 70 | | | 83,00 | 1,50 | 32,82 |
| 23181 | | OR | NBR | 70 | | | 84,00 | 1,50 | 33,86 |
| 2683 | | OR | NBR | 70 | | | 85,00 | 1,50 | 35,45 |
| 42194 | | OR | NBR | 70 | | | 86,00 | 1,50 | 37,12 |
| 38190 | | OR | NBR | 70 | | | 87,00 | 1,50 | 39,26 |
| 1395 | | OR | NBR | 70 | | | 88,00 | 1,50 | 39,95 |
| 42206 | | OR | NBR | 70 | | | 89,00 | 1,50 | 40,58 |
| 5196 | 182677 | OR | NBR | 70 | | | 90,00 | 1,50 | 41,27 |
| 22782 | | OR | NBR | 70 | | | 91,00 | 1,50 | 41,90 |
| 1431 | | OR | NBR | 70 | | | 92,00 | 1,50 | 42,58 |
| 42230 | | OR | NBR | 70 | | | 93,00 | 1,50 | 43,21 |
| 1449 | | OR | NBR | 70 | | | 94,00 | 1,50 | 43,90 |
| 1457 | | OR | NBR | 70 | | | 95,00 | 1,50 | 44,53 |
| 42243 | | OR | NBR | 70 | | | 96,00 | 1,50 | 45,22 |
| 42244 | | OR | NBR | 70 | | | 97,00 | 1,50 | 45,84 |
| 23191 | | OR | NBR | 70 | | | 98,00 | 1,50 | 46,53 |
| 109144 | | OR | NBR | 70 | | | 99,00 | 1,50 | 47,22 |
| 5350 | 192395 | OR | NBR | 70 | | | 100,00 | 1,50 | 47,85 |
| BRITISH STANDARD METRIC BS 4518 - SWEDISH STANDARD SMS 1586 | | | | | | | | | |
| 38232 | | OR | NBR | 70 | | | 2,75 | 1,60 | 2,91 |
| 3680 | | OR | NBR | 70 | | | 3,10 | 1,60 | 2,98 |
| 3681 | | OR | NBR | 70 | | | 4,10 | 1,60 | 3,18 |
| 41610 | | OR | NBR | 70 | | | 4,70 | 1,60 | 3,32 |
| 23020 | | OR | NBR | 70 | | | 5,00 | 1,60 | 3,32 |
| 3682 | | OR | NBR | 70 | | | 5,10 | 1,60 | 3,40 |
| 3683 | | OR | NBR | 70 | | | 6,10 | 1,60 | 3,54 |
| 3684 | | OR | NBR | 70 | | | 7,10 | 1,60 | 3,66 |
| 3685 | | OR | NBR | 70 | | | 8,10 | 1,60 | 3,81 |
| 3686 | 182393 | OR | NBR | 70 | | | 9,10 | 1,60 | 3,88 |
| 3687 | 182394 | OR | NBR | 70 | | | 10,10 | 1,60 | 4,02 |
| 3688 | 182395 | OR | NBR | 70 | | | 11,10 | 1,60 | 4,09 |
| 3689 | | OR | NBR | 70 | | | 12,10 | 1,60 | 4,15 |

| CODICE | NUOVO CODICE | TIPO | MAT. | SH | RIFERIMENTI USA | RIFERIMENTI UK | d1 mm | d2 mm | LISTINO 5-2016 X 100 € |
|---|---|---|---|---|---|---|---|---|---|
| 3690 | 182396 | OR | NBR | 70 | | | 13,10 | 1,60 | 4,43 |
| 3691 | 182397 | OR | NBR | 70 | | | 14,10 | 1,60 | 4,57 |
| 3692 | 182398 | OR | NBR | 70 | | | 15,10 | 1,60 | 4,98 |
| 3693 | 182399 | OR | NBR | 70 | | | 16,10 | 1,60 | 5,26 |
| 3674 | | OR | NBR | 70 | | | 17,10 | 1,60 | 5,47 |
| 3695 | | OR | NBR | 70 | | | 18,10 | 1,60 | 5,75 |
| 4914 | | OR | NBR | 70 | | | 19,10 | 1,60 | 6,44 |
| 3696 | | OR | NBR | 70 | | | 20,10 | 1,60 | 6,86 |
| 3697 | | OR | NBR | 70 | | | 21,10 | 1,60 | 7,20 |
| 3698 | | OR | NBR | 70 | | | 22,10 | 1,60 | 7,55 |
| 3699 | | OR | NBR | 70 | | | 25,10 | 1,60 | 8,58 |
| 3700 | 182400 | OR | NBR | 70 | | | 27,10 | 1,60 | 10,11 |
| 3701 | | OR | NBR | 70 | | | 29,10 | 1,60 | 10,66 |
| 3702 | 182402 | OR | NBR | 70 | | | 32,10 | 1,60 | 11,21 |
| 3703 | | OR | NBR | 70 | | | 35,10 | 1,60 | 12,40 |
| 3704 | 192282 | OR | NBR | 70 | | | 37,10 | 1,60 | 13,23 |
| FRENCH STANDARD R - JAPANESE STANDARD JIS 240 P+G | | | | | | | | | |
| 5522 | | OR | NBR | 70 | | | 2,40 | 1,90 | 3,26 |
| 3903 | 182475 | OR | NBR | 70 | | | 2,60 | 1,90 | 3,26 |
| 87467 | 182971 | OR | NBR | 70 | | | 2,80 | 1,90 | 3,26 |
| 3912 | | OR | NBR | 70 | | | 3,40 | 1,90 | 3,26 |
| 131359 | 183016 | OR | NBR | 70 | | | 3,80 | 1,90 | 3,26 |
| 4003 | 193747 | OR | NBR | 70 | | | 4,20 | 1,90 | 3,26 |
| 23385 | | OR | NBR | 70 | | | 4,80 | 1,90 | 3,37 |
| 3931 | 189078 | OR | NBR | 70 | | | 4,90 | 1,90 | 3,37 |
| 3941 | 193566 | OR | NBR | 70 | | | 5,70 | 1,90 | 3,37 |
| 23396 | | OR | NBR | 70 | | | 5,80 | 1,90 | 3,37 |
| 3953 | 193216 | OR | NBR | 70 | | | 6,40 | 1,90 | 3,58 |
| 23411 | 182779 | OR | NBR | 70 | | | 6,80 | 1,90 | 3,58 |
| 3961 | 192679 | OR | NBR | 70 | | | 7,20 | 1,90 | 3,58 |
| 23422 | 182780 | OR | NBR | 70 | | | 7,80 | 1,90 | 3,58 |
| 3970 | 188206 | OR | NBR | 70 | | | 8,00 | 1,90 | 3,58 |
| 23431 | | OR | NBR | 70 | | | 8,80 | 1,90 | 3,58 |
| 3984 | 192566 | OR | NBR | 70 | | | 8,90 | 1,90 | 3,58 |
| 23441 | | OR | NBR | 70 | | | 9,80 | 1,90 | 5,05 |
| METRIC STANDARD | | | | | | | | | |
| 41592 | | OR | NBR | 70 | | | 2,50 | 2,00 | 2,77 |
| 3909 | | OR | NBR | 70 | | | 3,00 | 2,00 | 2,77 |
| 377 | 192643 | OR | NBR | 70 | | | 3,50 | 2,00 | 2,77 |
| 3925 | | OR | NBR | 70 | | | 4,00 | 2,00 | 2,77 |
| 4901 | | OR | NBR | 70 | | | 4,50 | 2,00 | 2,91 |
| 3935 | | OR | NBR | 70 | | | 5,00 | 2,00 | 2,91 |
| 5122 | | OR | NBR | 70 | | | 5,50 | 2,00 | 3,12 |
| 3946 | | OR | NBR | 70 | | | 6,00 | 2,00 | 3,12 |
| 3954 | | OR | NBR | 70 | | | 6,50 | 2,00 | 3,46 |
| 3958 | | OR | NBR | 70 | | | 7,00 | 2,00 | 3,60 |
| 3963 | 182489 | OR | NBR | 70 | | | 7,50 | 2,00 | 3,74 |
| 3971 | 182492 | OR | NBR | 70 | | | 8,00 | 2,00 | 3,88 |
| 3981 | | OR | NBR | 70 | | | 8,50 | 2,00 | 3,88 |

| CODICE | NUOVO CODICE | TIPO | MAT. | SH | RIFERIMENTI USA | RIFERIMENTI UK | d1 mm | d2 mm | LISTINO 5-2016 X 100 € |
|---|---|---|---|---|---|---|---|---|---|
| 3988 | | OR | NBR | 70 | | | 9,00 | 2,00 | 4,15 |
| 3997 | | OR | NBR | 70 | | | 9,50 | 2,00 | 4,29 |
| 4010 | | OR | NBR | 70 | | | 10,00 | 2,00 | 4,49 |
| 5085 | | OR | NBR | 70 | | | 10,50 | 2,00 | 4,71 |
| 4022 | | OR | NBR | 70 | | | 11,00 | 2,00 | 4,85 |
| 5132 | 182671 | OR | NBR | 70 | | | 11,50 | 2,00 | 4,85 |
| 4035 | | OR | NBR | 70 | | | 12,00 | 2,00 | 4,85 |
| 5327 | | OR | NBR | 70 | | | 12,50 | 2,00 | 4,98 |
| 4048 | | OR | NBR | 70 | | | 13,00 | 2,00 | 5,12 |
| 23472 | | OR | NBR | 70 | | | 13,50 | 2,00 | 5,26 |
| 4063 | | OR | NBR | 70 | | | 14,00 | 2,00 | 5,40 |
| 2630 | | OR | NBR | 70 | | | 14,50 | 2,00 | 5,54 |
| 4072 | 182508 | OR | NBR | 70 | | | 15,00 | 2,00 | 5,68 |
| 87490 | | OR | NBR | 70 | | | 15,50 | 2,00 | 5,82 |
| 4089 | | OR | NBR | 70 | | | 16,00 | 2,00 | 6,09 |
| 41712 | | OR | NBR | 70 | | | 16,50 | 2,00 | 6,37 |
| 4101 | 182515 | OR | NBR | 70 | | | 17,00 | 2,00 | 6,65 |
| 4110 | 182517 | OR | NBR | 70 | | | 17,50 | 2,00 | 6,78 |
| 4115 | 182520 | OR | NBR | 70 | | | 18,00 | 2,00 | 6,92 |
| 23067 | 182759 | OR | NBR | 70 | | | 18,50 | 2,00 | 7,14 |
| 4126 | | OR | NBR | 70 | | | 19,00 | 2,00 | 7,27 |
| 23304 | | OR | NBR | 70 | | | 19,50 | 2,00 | 7,62 |
| 4148 | | OR | NBR | 70 | | | 20,00 | 2,00 | 7,75 |
| 617 | | OR | NBR | 70 | | | 20,50 | 2,00 | 7,89 |
| 4158 | | OR | NBR | 70 | | | 21,00 | 2,00 | 8,03 |
| 5557 | | OR | NBR | 70 | | | 21,50 | 2,00 | 8,17 |
| 4164 | | OR | NBR | 70 | | | 22,00 | 2,00 | 8,52 |
| 5173 | | OR | NBR | 70 | | | 22,50 | 2,00 | 8,86 |
| 4172 | | OR | NBR | 70 | | | 23,00 | 2,00 | 9,14 |
| 667 | 181883 | OR | NBR | 70 | | | 23,50 | 2,00 | 9,42 |
| 4181 | 193685 | OR | NBR | 70 | | | 24,00 | 2,00 | 9,69 |
| 41820 | | OR | NBR | 70 | | | 24,50 | 2,00 | 9,90 |
| 4189 | 193944 | OR | NBR | 70 | | | 25,00 | 2,00 | 10,04 |
| 41833 | 182862 | OR | NBR | 70 | | | 25,50 | 2,00 | 10,18 |
| 4201 | 182534 | OR | NBR | 70 | | | 26,00 | 2,00 | 10,52 |
| 41838 | | OR | NBR | 70 | | | 26,50 | 2,00 | 10,80 |
| 4212 | 182537 | OR | NBR | 70 | | | 27,00 | 2,00 | 11,15 |
| 23537 | | OR | NBR | 70 | | | 27,50 | 2,00 | 11,43 |
| 4219 | | OR | NBR | 70 | | | 28,00 | 2,00 | 11,57 |
| 22742 | | OR | NBR | 70 | | | 28,50 | 2,00 | 11,77 |
| 4228 | 182540 | OR | NBR | 70 | | | 29,00 | 2,00 | 11,91 |
| 41860 | | OR | NBR | 70 | | | 29,50 | 2,00 | 12,05 |
| 4237 | 182542 | OR | NBR | 70 | | | 30,00 | 2,00 | 12,18 |
| 87497 | | OR | NBR | 70 | | | 30,50 | 2,00 | 12,40 |
| 4246 | | OR | NBR | 70 | | | 31,00 | 2,00 | 12,54 |
| 23307 | | OR | NBR | 70 | | | 31,50 | 2,00 | 12,67 |
| 4253 | 191827 | OR | NBR | 70 | | | 32,00 | 2,00 | 12,74 |
| 41884 | | OR | NBR | 70 | | | 32,50 | 2,00 | 12,95 |
| 4262 | 192442 | OR | NBR | 70 | | | 33,00 | 2,00 | 13,09 |

| CODICE | NUOVO CODICE | TIPO | MAT. | SH | RIFERIMENTI USA | RIFERIMENTI UK | d1 mm | d2 mm | LISTINO 5-2016 X 100 € |
|---|---|---|---|---|---|---|---|---|---|
| 814 | | OR | NBR | 70 | | | 33,50 | 2,00 | 13,29 |
| 4269 | 182545 | OR | NBR | 70 | | | 34,00 | 2,00 | 13,57 |
| 41899 | | OR | NBR | 70 | | | 34,50 | 2,00 | 13,92 |
| 4278 | | OR | NBR | 70 | | | 35,00 | 2,00 | 14,06 |
| 87501 | | OR | NBR | 70 | | | 35,50 | 2,00 | 14,20 |
| 4287 | | OR | NBR | 70 | | | 36,00 | 2,00 | 14,34 |
| 23107 | | OR | NBR | 70 | | | 36,50 | 2,00 | 14,47 |
| 4297 | | OR | NBR | 70 | | | 37,00 | 2,00 | 14,68 |
| 41919 | | OR | NBR | 70 | | | 37,50 | 2,00 | 14,81 |
| 4305 | 182555 | OR | NBR | 70 | | | 38,00 | 2,00 | 15,03 |
| 4312 | | OR | NBR | 70 | | | 38,50 | 2,00 | 15,17 |
| 4313 | 192884 | OR | NBR | 70 | | | 39,00 | 2,00 | 15,30 |
| 23114 | | OR | NBR | 70 | | | 39,50 | 2,00 | 15,44 |
| 4323 | | OR | NBR | 70 | | | 40,00 | 2,00 | 15,58 |
| 4333 | | OR | NBR | 70 | | | 41,00 | 2,00 | 15,86 |
| 4339 | 192281 | OR | NBR | 70 | | | 42,00 | 2,00 | 16,27 |
| 4347 | | OR | NBR | 70 | | | 43,00 | 2,00 | 16,97 |
| 4356 | 192284 | OR | NBR | 70 | | | 44,00 | 2,00 | 17,94 |
| 4365 | | OR | NBR | 70 | | | 45,00 | 2,00 | 18,83 |
| 4374 | 182564 | OR | NBR | 70 | | | 46,00 | 2,00 | 19,73 |
| 4381 | | OR | NBR | 70 | | | 47,00 | 2,00 | 20,35 |
| 4387 | | OR | NBR | 70 | | | 48,00 | 2,00 | 20,84 |
| 1006 | | OR | NBR | 70 | | | 49,00 | 2,00 | 21,61 |
| 4399 | | OR | NBR | 70 | | | 50,00 | 2,00 | 22,37 |
| 1037 | 181910 | OR | NBR | 70 | | | 51,00 | 2,00 | 22,50 |
| 4407 | | OR | NBR | 70 | | | 52,00 | 2,00 | 22,72 |
| 4413 | 182572 | OR | NBR | 70 | | | 53,00 | 2,00 | 22,86 |
| 1077 | | OR | NBR | 70 | | | 54,00 | 2,00 | 23,12 |
| 4423 | | OR | NBR | 70 | | | 55,00 | 2,00 | 23,27 |
| 4430 | | OR | NBR | 70 | | | 56,00 | 2,00 | 23,47 |
| 4434 | | OR | NBR | 70 | | | 57,00 | 2,00 | 23,61 |
| 4439 | 182576 | OR | NBR | 70 | | | 58,00 | 2,00 | 23,75 |
| 87507 | 182972 | OR | NBR | 70 | | | 59,00 | 2,00 | 23,95 |
| 4448 | 182579 | OR | NBR | 70 | | | 60,00 | 2,00 | 24,24 |
| 1156 | | OR | NBR | 70 | | | 61,00 | 2,00 | 24,52 |
| 4455 | | OR | NBR | 70 | | | 62,00 | 2,00 | 24,86 |
| 4461 | 182584 | OR | NBR | 70 | | | 63,00 | 2,00 | 25,13 |
| 22770 | 182755 | OR | NBR | 70 | | | 64,00 | 2,00 | 25,76 |
| 4471 | | OR | NBR | 70 | | | 65,00 | 2,00 | 26,38 |
| 4477 | | OR | NBR | 70 | | | 66,00 | 2,00 | 27,01 |
| 1217 | | OR | NBR | 70 | | | 67,00 | 2,00 | 27,84 |
| 4484 | | OR | NBR | 70 | | | 68,00 | 2,00 | 28,39 |
| 23158 | | OR | NBR | 70 | | | 69,00 | 2,00 | 29,22 |
| 4492 | | OR | NBR | 70 | | | 70,00 | 2,00 | 29,64 |
| 5342 | | OR | NBR | 70 | | | 71,00 | 2,00 | 30,05 |
| 4503 | | OR | NBR | 70 | | | 72,00 | 2,00 | 30,53 |
| 4508 | | OR | NBR | 70 | | | 73,00 | 2,00 | 30,89 |
| 4513 | 182591 | OR | NBR | 70 | | | 74,00 | 2,00 | 31,16 |
| 4517 | | OR | NBR | 70 | | | 75,00 | 2,00 | 31,44 |

| CODICE | NUOVO CODICE | TIPO | MAT. | SH | RIFERIMENTI USA | RIFERIMENTI UK | d1 mm | d2 mm | LISTINO 5-2016 X 100 € |
|---|---|---|---|---|---|---|---|---|---|
| 4524 | | OR | NBR | 70 | | | 76,00 | 2,00 | 31,78 |
| 42151 | | OR | NBR | 70 | | | 77,00 | 2,00 | 32,13 |
| 4530 | | OR | NBR | 70 | | | 78,00 | 2,00 | 32,41 |
| 1315 | 181938 | OR | NBR | 70 | | | 79,00 | 2,00 | 32,82 |
| 4539 | 182593 | OR | NBR | 70 | | | 80,00 | 2,00 | 33,17 |
| 1339 | | OR | NBR | 70 | | | 81,00 | 2,00 | 33,93 |
| 25917 | | OR | NBR | 70 | | | 82,00 | 2,00 | 34,69 |
| 5346 | 182704 | OR | NBR | 70 | | | 83,00 | 2,00 | 35,52 |
| 1359 | | OR | NBR | 70 | | | 84,00 | 2,00 | 36,21 |
| 4557 | 193339 | OR | NBR | 70 | | | 85,00 | 2,00 | 37,04 |
| 4563 | | OR | NBR | 70 | | | 86,00 | 2,00 | 37,73 |
| 4566 | | OR | NBR | 70 | | | 87,00 | 2,00 | 38,56 |
| 5572 | | OR | NBR | 70 | | | 88,00 | 2,00 | 39,41 |
| 1408 | | OR | NBR | 70 | | | 89,00 | 2,00 | 40,09 |
| 4573 | 182599 | OR | NBR | 70 | | | 90,00 | 2,00 | 40,92 |
| 1428 | | OR | NBR | 70 | | | 91,00 | 2,00 | 41,61 |
| 23185 | | OR | NBR | 70 | | | 92,00 | 2,00 | 42,44 |
| 5348 | | OR | NBR | 70 | | | 93,00 | 2,00 | 43,21 |
| 4583 | | OR | NBR | 70 | | | 94,00 | 2,00 | 43,96 |
| 4586 | | OR | NBR | 70 | | | 95,00 | 2,00 | 44,73 |
| 4593 | | OR | NBR | 70 | | | 96,00 | 2,00 | 45,50 |
| 42245 | | OR | NBR | 70 | | | 97,00 | 2,00 | 46,25 |
| 5571 | | OR | NBR | 70 | | | 98,00 | 2,00 | 47,09 |
| 42256 | | OR | NBR | 70 | | | 99,00 | 2,00 | 47,78 |
| 4607 | | OR | NBR | 70 | | | 100,00 | 2,00 | 48,61 |
| BR. STD METRIC BS 4518 - JAPAN STD JIS 240 P+G - SWEDISH STD SMS 1586 | | | | | | | | | |
| 3705 | | OR | NBR | 70 | | | 3,30 | 2,40 | 3,12 |
| 4900 | | OR | NBR | 70 | | | 3,60 | 2,40 | 3,12 |
| 3706 | | OR | NBR | 70 | | | 4,30 | 2,40 | 3,12 |
| 5452 | | OR | NBR | 70 | | | 4,60 | 2,40 | 3,12 |
| 3707 | 182403 | OR | NBR | 70 | | | 5,30 | 2,40 | 3,26 |
| 41621 | | OR | NBR | 70 | | | 5,50 | 2,40 | 3,46 |
| 5453 | 182713 | OR | NBR | 70 | | | 5,60 | 2,40 | 3,60 |
| 3708 | | OR | NBR | 70 | | | 6,30 | 2,40 | 3,74 |
| 21199 | | OR | NBR | 70 | | | 6,60 | 2,40 | 3,74 |
| 3709 | | OR | NBR | 70 | | | 7,30 | 2,40 | 3,88 |
| 5126 | | OR | NBR | 70 | | | 7,60 | 2,40 | 3,88 |
| 3710 | | OR | NBR | 70 | | | 8,30 | 2,40 | 4,02 |
| 4909 | | OR | NBR | 70 | | | 8,60 | 2,40 | 4,15 |
| 3711 | | OR | NBR | 70 | | | 9,30 | 2,40 | 4,29 |
| 5573 | | OR | NBR | 70 | | | 9,60 | 2,40 | 4,49 |
| 3712 | 182404 | OR | NBR | 70 | | | 10,30 | 2,40 | 4,71 |
| 5544 | | OR | NBR | 70 | | | 10,60 | 2,40 | 4,71 |
| 3713 | 182405 | OR | NBR | 70 | | | 11,30 | 2,40 | 4,85 |
| 41677 | | OR | NBR | 70 | | | 11,50 | 2,40 | 4,85 |
| 5133 | | OR | NBR | 70 | | | 11,60 | 2,40 | 4,98 |
| 3714 | | OR | NBR | 70 | | | 12,30 | 2,40 | 4,98 |
| 21200 | | OR | NBR | 70 | | | 12,60 | 2,40 | 5,12 |
| 3715 | 182407 | OR | NBR | 70 | | | 13,30 | 2,40 | 5,12 |

| CODICE | NUOVO CODICE | TIPO | MAT. | SH | RIFERIMENTI USA | RIFERIMENTI UK | d1 mm | d2 mm | LISTINO 5-2016 X 100 € |
|---|---|---|---|---|---|---|---|---|---|
| 41691 | | OR | NBR | 70 | | | 13,50 | 2,40 | 5,26 |
| 4911 | | OR | NBR | 70 | | | 13,60 | 2,40 | 5,40 |
| 3716 | | OR | NBR | 70 | | | 14,30 | 2,40 | 5,54 |
| 5550 | | OR | NBR | 70 | | | 14,60 | 2,40 | 5,82 |
| 3717 | | OR | NBR | 70 | | | 15,30 | 2,40 | 6,09 |
| 41703 | | OR | NBR | 70 | | | 15,50 | 2,40 | 6,23 |
| 21201 | | OR | NBR | 70 | | | 15,60 | 2,40 | 6,37 |
| 3718 | 182408 | OR | NBR | 70 | | | 16,30 | 2,40 | 6,51 |
| 5149 | | OR | NBR | 70 | | | 16,60 | 2,40 | 6,65 |
| 3719 | 182409 | OR | NBR | 70 | | | 17,30 | 2,40 | 6,78 |
| 41725 | | OR | NBR | 70 | | | 17,50 | 2,40 | 6,92 |
| 21202 | | OR | NBR | 70 | | | 17,60 | 2,40 | 7,06 |
| 3720 | 182410 | OR | NBR | 70 | | | 18,30 | 2,40 | 7,20 |
| 5478 | | OR | NBR | 70 | | | 18,60 | 2,40 | 7,34 |
| 3721 | 182411 | OR | NBR | 70 | | | 19,30 | 2,40 | 7,48 |
| 5482 | | OR | NBR | 70 | | | 19,60 | 2,40 | 7,62 |
| 3722 | | OR | NBR | 70 | | | 20,30 | 2,40 | 7,75 |
| 41780 | | OR | NBR | 70 | | | 20,50 | 2,40 | 7,89 |
| 38141 | | OR | NBR | 70 | | | 20,60 | 2,40 | 7,89 |
| 3723 | | OR | NBR | 70 | | | 21,30 | 2,40 | 8,17 |
| 41786 | | OR | NBR | 70 | | | 21,50 | 2,40 | 8,58 |
| 5487 | 182718 | OR | NBR | 70 | | | 21,60 | 2,40 | 9,28 |
| 3724 | | OR | NBR | 70 | | | 22,30 | 2,40 | 9,55 |
| 3725 | | OR | NBR | 70 | | | 23,30 | 2,40 | 9,69 |
| 41807 | | OR | NBR | 70 | | | 23,50 | 2,40 | 10,04 |
| 41821 | | OR | NBR | 70 | | | 24,50 | 2,40 | 10,38 |
| 5266 | | OR | NBR | 70 | | | 24,60 | 2,40 | 10,66 |
| 3727 | 193486 | OR | NBR | 70 | | | 25,30 | 2,40 | 10,94 |
| 711 | | OR | NBR | 70 | | | 26,30 | 2,40 | 11,21 |
| 41844 | | OR | NBR | 70 | | | 27,50 | 2,40 | 11,43 |
| 5559 | 182723 | OR | NBR | 70 | | | 27,60 | 2,40 | 11,57 |
| 21203 | | OR | NBR | 70 | | | 29,60 | 2,40 | 11,91 |
| 3729 | | OR | NBR | 70 | | | 30,30 | 2,40 | 12,12 |
| 21204 | 182728 | OR | NBR | 70 | | | 31,60 | 2,40 | 12,40 |
| 3730 | | OR | NBR | 70 | | | 33,30 | 2,40 | 13,15 |
| 21205 | | OR | NBR | 70 | | | 34,60 | 2,40 | 13,92 |
| 21368 | | OR | NBR | 70 | | | 37,60 | 2,40 | 14,68 |
| 21369 | 182737 | OR | NBR | 70 | | | 39,60 | 2,40 | 15,44 |
| 5183 | | OR | NBR | 70 | | | 41,60 | 2,40 | 16,97 |
| 21370 | | OR | NBR | 70 | | | 44,60 | 2,40 | 18,49 |
| 21371 | | OR | NBR | 70 | | | 47,60 | 2,40 | 20,09 |
| 21372 | | OR | NBR | 70 | | | 49,60 | 2,40 | 21,61 |
| 21373 | | OR | NBR | 70 | | | 51,60 | 2,40 | 23,95 |
| 21374 | | OR | NBR | 70 | | | 54,60 | 2,40 | 24,66 |
| 5567 | 182724 | OR | NBR | 70 | | | 57,60 | 2,40 | 25,49 |
| 21375 | | OR | NBR | 70 | | | 59,60 | 2,40 | 26,18 |
| 21376 | | OR | NBR | 70 | | | 61,60 | 2,40 | 27,84 |
| 21377 | | OR | NBR | 70 | | | 64,60 | 2,40 | 29,36 |
| 21378 | | OR | NBR | 70 | | | 67,60 | 2,40 | 30,89 |

| CODICE | NUOVO CODICE | TIPO | MAT. | SH | RIFERIMENTI USA | RIFERIMENTI UK | d1 mm | d2 mm | LISTINO 5-2016 X 100 € |
|---|---|---|---|---|---|---|---|---|---|
| 21379 | | OR | NBR | 70 | | | 69,60 | 2,40 | 32,41 |
| | | | | METRIC STANDARD | | | | | |
| 3926 | | OR | NBR | 70 | | | 4,00 | 2,50 | 3,18 |
| 41609 | | OR | NBR | 70 | | | 4,60 | 2,50 | 3,18 |
| 3936 | | OR | NBR | 70 | | | 5,00 | 2,50 | 3,18 |
| 23021 | | OR | NBR | 70 | | | 5,50 | 2,50 | 3,46 |
| 3948 | 182487 | OR | NBR | 70 | | | 6,00 | 2,50 | 3,74 |
| 5536 | | OR | NBR | 70 | | | 6,50 | 2,50 | 3,88 |
| 3959 | 190592 | OR | NBR | 70 | | | 7,00 | 2,50 | 4,09 |
| 3964 | | OR | NBR | 70 | | | 7,50 | 2,50 | 4,15 |
| 3973 | | OR | NBR | 70 | | | 8,00 | 2,50 | 4,23 |
| 3982 | | OR | NBR | 70 | | | 8,50 | 2,50 | 4,64 |
| 3991 | 182496 | OR | NBR | 70 | | | 9,00 | 2,50 | 4,71 |
| 3998 | | OR | NBR | 70 | | | 9,50 | 2,50 | 4,85 |
| 4012 | 182498 | OR | NBR | 70 | | | 10,00 | 2,50 | 4,85 |
| 5264 | | OR | NBR | 70 | | | 10,50 | 2,50 | 4,98 |
| 4023 | 182499 | OR | NBR | 70 | | | 11,00 | 2,50 | 5,06 |
| 484 | | OR | NBR | 70 | | | 11,50 | 2,50 | 5,12 |
| 4036 | | OR | NBR | 70 | | | 12,00 | 2,50 | 5,12 |
| 4044 | 193025 | OR | NBR | 70 | | | 12,50 | 2,50 | 5,34 |
| 4049 | | OR | NBR | 70 | | | 13,00 | 2,50 | 5,47 |
| 4059 | | OR | NBR | 70 | | | 13,50 | 2,50 | 5,61 |
| 4064 | | OR | NBR | 70 | | | 14,00 | 2,50 | 5,75 |
| 23479 | | OR | NBR | 70 | | | 14,50 | 2,50 | 5,89 |
| 4073 | | OR | NBR | 70 | | | 15,00 | 2,50 | 6,03 |
| 23059 | | OR | NBR | 70 | | | 15,50 | 2,50 | 6,44 |
| 4090 | 182511 | OR | NBR | 70 | | | 16,00 | 2,50 | 6,72 |
| 556 | | OR | NBR | 70 | | | 16,50 | 2,50 | 7,14 |
| 4102 | 182516 | OR | NBR | 70 | | | 17,00 | 2,50 | 7,27 |
| 5152 | | OR | NBR | 70 | | | 17,50 | 2,50 | 7,48 |
| 4117 | | OR | NBR | 70 | | | 18,00 | 2,50 | 7,62 |
| 587 | 181879 | OR | NBR | 70 | | | 18,50 | 2,50 | 7,75 |
| 4127 | 192650 | OR | NBR | 70 | | | 19,00 | 2,50 | 7,89 |
| 596 | | OR | NBR | 70 | | | 19,50 | 2,50 | 8,03 |
| 4149 | 182523 | OR | NBR | 70 | | | 20,00 | 2,50 | 8,10 |
| 4233 | | OR | NBR | 70 | | | 20,50 | 2,50 | 8,45 |
| 4159 | | OR | NBR | 70 | | | 21,00 | 2,50 | 8,72 |
| 2778 | 193212 | OR | NBR | 70 | | | 21,50 | 2,50 | 9,07 |
| 4165 | | OR | NBR | 70 | | | 22,00 | 2,50 | 9,49 |
| 2637 | | OR | NBR | 70 | | | 22,50 | 2,50 | 9,77 |
| 4173 | | OR | NBR | 70 | | | 23,00 | 2,50 | 9,90 |
| 23079 | | OR | NBR | 70 | | | 23,50 | 2,50 | 10,11 |
| 4183 | | OR | NBR | 70 | | | 24,00 | 2,50 | 10,18 |
| 23527 | | OR | NBR | 70 | | | 24,50 | 2,50 | 10,74 |
| 4191 | | OR | NBR | 70 | | | 25,00 | 2,50 | 11,08 |
| 41834 | | OR | NBR | 70 | | | 25,50 | 2,50 | 11,49 |
| 4202 | | OR | NBR | 70 | | | 26,00 | 2,50 | 11,77 |
| 712 | 181885 | OR | NBR | 70 | | | 26,50 | 2,50 | 11,98 |
| 4213 | | OR | NBR | 70 | | | 27,00 | 2,50 | 12,18 |

| CODICE | NUOVO CODICE | TIPO | MAT. | SH | RIFERIMENTI USA | RIFERIMENTI UK | d1 mm | d2 mm | LISTINO 5-2016 X 100 € |
|---|---|---|---|---|---|---|---|---|---|
| 731 | | OR | NBR | 70 | | | 27,50 | 2,50 | 12,40 |
| 4220 | | OR | NBR | 70 | | | 28,00 | 2,50 | 12,54 |
| 5291 | | OR | NBR | 70 | | | 28,50 | 2,50 | 13,09 |
| 4229 | | OR | NBR | 70 | | | 29,00 | 2,50 | 13,23 |
| 41861 | | OR | NBR | 70 | | | 29,50 | 2,50 | 13,64 |
| 4238 | | OR | NBR | 70 | | | 30,00 | 2,50 | 13,98 |
| 4247 | | OR | NBR | 70 | | | 31,00 | 2,50 | 14,40 |
| 23557 | | OR | NBR | 70 | | | 31,50 | 2,50 | 14,54 |
| 4254 | | OR | NBR | 70 | | | 32,00 | 2,50 | 14,68 |
| 4263 | 182544 | OR | NBR | 70 | | | 33,00 | 2,50 | 14,89 |
| 24529 | | OR | NBR | 70 | | | 33,50 | 2,50 | 15,03 |
| 4271 | 182546 | OR | NBR | 70 | | | 34,00 | 2,50 | 15,23 |
| 41900 | | OR | NBR | 70 | | | 34,50 | 2,50 | 15,37 |
| 4279 | 193586 | OR | NBR | 70 | | | 35,00 | 2,50 | 15,51 |
| 41907 | | OR | NBR | 70 | | | 35,50 | 2,50 | 15,72 |
| 4288 | 193156 | OR | NBR | 70 | | | 36,00 | 2,50 | 15,86 |
| 41912 | | OR | NBR | 70 | | | 36,50 | 2,50 | 15,92 |
| 4298 | | OR | NBR | 70 | | | 37,00 | 2,50 | 16,00 |
| 41920 | | OR | NBR | 70 | | | 37,50 | 2,50 | 16,06 |
| 4306 | | OR | NBR | 70 | | | 38,00 | 2,50 | 16,20 |
| 23110 | | OR | NBR | 70 | | | 38,50 | 2,50 | 16,34 |
| 4314 | 182556 | OR | NBR | 70 | | | 39,00 | 2,50 | 16,83 |
| 41940 | | OR | NBR | 70 | | | 39,50 | 2,50 | 17,17 |
| 4324 | | OR | NBR | 70 | | | 40,00 | 2,50 | 17,38 |
| 4334 | | OR | NBR | 70 | | | 41,00 | 2,50 | 17,52 |
| 4340 | | OR | NBR | 70 | | | 42,00 | 2,50 | 17,86 |
| 4348 | | OR | NBR | 70 | | | 43,00 | 2,50 | 18,29 |
| 4357 | 182562 | OR | NBR | 70 | | | 44,00 | 2,50 | 19,12 |
| 4366 | 193933 | OR | NBR | 70 | | | 45,00 | 2,50 | 19,73 |
| 971 | | OR | NBR | 70 | | | 46,00 | 2,50 | 20,92 |
| 4382 | | OR | NBR | 70 | | | 47,00 | 2,50 | 21,46 |
| 4388 | | OR | NBR | 70 | | | 48,00 | 2,50 | 22,29 |
| 1007 | | OR | NBR | 70 | | | 49,00 | 2,50 | 22,92 |
| 4400 | | OR | NBR | 70 | | | 50,00 | 2,50 | 23,61 |
| 1038 | | OR | NBR | 70 | | | 51,00 | 2,50 | 24,10 |
| 4408 | | OR | NBR | 70 | | | 52,00 | 2,50 | 24,38 |
| 4414 | 182573 | OR | NBR | 70 | | | 53,00 | 2,50 | 24,78 |
| 4415 | | OR | NBR | 70 | | | 54,00 | 2,50 | 25,21 |
| 4424 | | OR | NBR | 70 | | | 55,00 | 2,50 | 25,61 |
| 1093 | 181919 | OR | NBR | 70 | | | 56,00 | 2,50 | 26,04 |
| 4435 | 182575 | OR | NBR | 70 | | | 57,00 | 2,50 | 26,38 |
| 4440 | | OR | NBR | 70 | | | 58,00 | 2,50 | 26,73 |
| 1127 | | OR | NBR | 70 | | | 59,00 | 2,50 | 27,07 |
| 4449 | | OR | NBR | 70 | | | 60,00 | 2,50 | 27,56 |
| 23310 | | OR | NBR | 70 | | | 61,00 | 2,50 | 27,70 |
| 4456 | | OR | NBR | 70 | | | 62,00 | 2,50 | 28,04 |
| 4462 | | OR | NBR | 70 | | | 63,00 | 2,50 | 28,39 |
| 42047 | | OR | NBR | 70 | | | 64,00 | 2,50 | 28,73 |
| 4472 | | OR | NBR | 70 | | | 65,00 | 2,50 | 29,09 |

| CODICE | NUOVO CODICE | TIPO | MAT. | SH | RIFERIMENTI USA | RIFERIMENTI UK | d1 mm | d2 mm | LISTINO 5-2016 X 100 € |
|---|---|---|---|---|---|---|---|---|---|
| 23154 | | OR | NBR | 70 | | | 66,00 | 2,50 | 29,36 |
| 4481 | 182587 | OR | NBR | 70 | | | 67,00 | 2,50 | 29,70 |
| 4485 | | OR | NBR | 70 | | | 68,00 | 2,50 | 30,12 |
| 42114 | | OR | NBR | 70 | | | 69,00 | 2,50 | 30,89 |
| 4493 | 182590 | OR | NBR | 70 | | | 70,00 | 2,50 | 31,50 |
| 42120 | | OR | NBR | 70 | | | 71,00 | 2,50 | 32,20 |
| 5343 | | OR | NBR | 70 | | | 72,00 | 2,50 | 32,82 |
| 4509 | | OR | NBR | 70 | | | 73,00 | 2,50 | 33,44 |
| 1272 | | OR | NBR | 70 | | | 74,00 | 2,50 | 34,13 |
| 4518 | 182592 | OR | NBR | 70 | | | 75,00 | 2,50 | 34,90 |
| 4525 | | OR | NBR | 70 | | | 76,00 | 2,50 | 35,66 |
| 23649 | | OR | NBR | 70 | | | 77,00 | 2,50 | 36,42 |
| 4531 | 194576 | OR | NBR | 70 | | | 78,00 | 2,50 | 37,12 |
| 23175 | | OR | NBR | 70 | | | 79,00 | 2,50 | 37,81 |
| 4540 | | OR | NBR | 70 | | | 80,00 | 2,50 | 38,29 |
| 42169 | | OR | NBR | 70 | | | 81,00 | 2,50 | 38,92 |
| 4952 | | OR | NBR | 70 | | | 82,00 | 2,50 | 39,61 |
| 2681 | | OR | NBR | 70 | | | 83,00 | 2,50 | 40,24 |
| 56816 | | OR | NBR | 70 | | | 84,00 | 2,50 | 40,78 |
| 4558 | | OR | NBR | 70 | | | 85,00 | 2,50 | 41,61 |
| 22779 | | OR | NBR | 70 | | | 86,00 | 2,50 | 42,24 |
| 24583 | | OR | NBR | 70 | | | 87,00 | 2,50 | 42,93 |
| 23182 | | OR | NBR | 70 | | | 88,00 | 2,50 | 43,56 |
| 42207 | | OR | NBR | 70 | | | 89,00 | 2,50 | 44,24 |
| 4574 | | OR | NBR | 70 | | | 90,00 | 2,50 | 44,87 |
| 42222 | | OR | NBR | 70 | | | 91,00 | 2,50 | 45,56 |
| 42225 | | OR | NBR | 70 | | | 92,00 | 2,50 | 46,19 |
| 2688 | | OR | NBR | 70 | | | 93,00 | 2,50 | 46,88 |
| 4584 | | OR | NBR | 70 | | | 94,00 | 2,50 | 47,50 |
| 4587 | | OR | NBR | 70 | | | 95,00 | 2,50 | 48,19 |
| 4594 | | OR | NBR | 70 | | | 96,00 | 2,50 | 48,82 |
| 42246 | | OR | NBR | 70 | | | 97,00 | 2,50 | 49,51 |
| 1478 | | OR | NBR | 70 | | | 98,00 | 2,50 | 50,13 |
| 42257 | | OR | NBR | 70 | | | 99,00 | 2,50 | 50,82 |
| 1493 | | OR | NBR | 70 | | | 100,00 | 2,50 | 51,45 |
| 23192 | | OR | NBR | 70 | | | 101,00 | 2,50 | 52,14 |
| 42267 | | OR | NBR | 70 | | | 102,00 | 2,50 | 52,76 |
| 2690 | 182053 | OR | NBR | 70 | | | 103,00 | 2,50 | 53,59 |
| 5315 | | OR | NBR | 70 | | | 104,00 | 2,50 | 54,42 |
| 1528 | 181954 | OR | NBR | 70 | | | 105,00 | 2,50 | 55,25 |
| 1545 | | OR | NBR | 70 | | | 106,00 | 2,50 | 56,08 |
| 4964 | | OR | NBR | 70 | | | 107,00 | 2,50 | 56,92 |
| 23668 | | OR | NBR | 70 | | | 108,00 | 2,50 | 57,75 |
| 2693 | | OR | NBR | 70 | | | 109,00 | 2,50 | 58,58 |
| 2695 | | OR | NBR | 70 | | | 110,00 | 2,50 | 59,41 |
| 23291 | | OR | NBR | 70 | | | 111,00 | 2,50 | 60,24 |
| 1581 | | OR | NBR | 70 | | | 112,00 | 2,50 | 61,07 |
| 2699 | | OR | NBR | 70 | | | 113,00 | 2,50 | 61,84 |
| 42311 | | OR | NBR | 70 | | | 114,00 | 2,50 | 62,67 |

| CODICE | NUOVO CODICE | TIPO | MAT. | SH | RIFERIMENTI USA | RIFERIMENTI UK | d1 mm | d2 mm | LISTINO 5-2016 X 100 € |
|---|---|---|---|---|---|---|---|---|---|
| 1600 | | OR | NBR | 70 | | | 115,00 | 2,50 | 63,22 |
| 42321 | | OR | NBR | 70 | | | 116,00 | 2,50 | 64,33 |
| 1614 | | OR | NBR | 70 | | | 117,00 | 2,50 | 65,16 |
| 42329 | 182887 | OR | NBR | 70 | | | 118,00 | 2,50 | 65,99 |
| 42335 | | OR | NBR | 70 | | | 119,00 | 2,50 | 66,82 |
| 4659 | | OR | NBR | 70 | | | 120,00 | 2,50 | 67,65 |
| 1636 | | OR | NBR | 70 | | | 121,00 | 2,50 | 69,31 |
| 23677 | | OR | NBR | 70 | | | 122,00 | 2,50 | 70,08 |
| 4667 | | OR | NBR | 70 | | | 123,00 | 2,50 | 70,91 |
| 4970 | | OR | NBR | 70 | | | 124,00 | 2,50 | 71,74 |
| 4670 | | OR | NBR | 70 | | | 125,00 | 2,50 | 72,57 |
| 42361 | | OR | NBR | 70 | | | 126,00 | 2,50 | 73,40 |
| 42362 | | OR | NBR | 70 | | | 127,00 | 2,50 | 74,23 |
| 1673 | | OR | NBR | 70 | | | 128,00 | 2,50 | 75,13 |
| 42372 | | OR | NBR | 70 | | | 129,00 | 2,50 | 75,89 |
| 4680 | | OR | NBR | 70 | | | 130,00 | 2,50 | 76,72 |
| 42380 | | OR | NBR | 70 | | | 131,00 | 2,50 | 77,56 |
| 42387 | | OR | NBR | 70 | | | 132,00 | 2,50 | 78,39 |
| 5543 | | OR | NBR | 70 | | | 133,00 | 2,50 | 79,14 |
| 42398 | | OR | NBR | 70 | | | 134,00 | 2,50 | 79,56 |
| 4695 | | OR | NBR | 70 | | | 135,00 | 2,50 | 79,97 |
| 42409 | | OR | NBR | 70 | | | 136,00 | 2,50 | 80,39 |
| 24063 | | OR | NBR | 70 | | | 137,00 | 2,50 | 80,80 |
| 42416 | | OR | NBR | 70 | | | 138,00 | 2,50 | 81,22 |
| 42419 | | OR | NBR | 70 | | | 139,00 | 2,50 | 81,63 |
| 1740 | | OR | NBR | 70 | | | 140,00 | 2,50 | 82,05 |
| 42429 | | OR | NBR | 70 | | | 141,00 | 2,50 | 82,48 |
| 42433 | | OR | NBR | 70 | | | 142,00 | 2,50 | 82,88 |
| 42438 | | OR | NBR | 70 | | | 143,00 | 2,50 | 83,31 |
| 42444 | | OR | NBR | 70 | | | 144,00 | 2,50 | 83,71 |
| 1760 | | OR | NBR | 70 | | | 145,00 | 2,50 | 84,14 |
| 42449 | | OR | NBR | 70 | | | 146,00 | 2,50 | 84,97 |
| 42453 | | OR | NBR | 70 | | | 147,00 | 2,50 | 85,72 |
| 87675 | 182978 | OR | NBR | 70 | | | 148,00 | 2,50 | 86,20 |
| 42463 | | OR | NBR | 70 | | | 149,00 | 2,50 | 86,63 |
| 1786 | | OR | NBR | 70 | | | 150,00 | 2,50 | 87,46 |
| | | | | FRENCH STANDARD R | | | | | |
| 3985 | | OR | NBR | 70 | | | 8,90 | 2,70 | 4,12 |
| 4019 | | OR | NBR | 70 | | | 10,50 | 2,70 | 4,36 |
| 4042 | | OR | NBR | 70 | | | 12,10 | 2,70 | 4,57 |
| 4060 | 182506 | OR | NBR | 70 | | | 13,60 | 2,70 | 4,88 |
| 4080 | | OR | NBR | 70 | | | 15,10 | 2,70 | 5,11 |
| 4099 | | OR | NBR | 70 | | | 16,90 | 2,70 | 5,87 |
| 4123 | | OR | NBR | 70 | | | 18,40 | 2,70 | 6,63 |
| 23535 | | OR | NBR | 70 | | | 27,30 | 2,70 | 10,54 |
| | | | | METRIC STANDARD | | | | | |
| 370 | | OR | NBR | 70 | | | 3,00 | 3,00 | 4,02 |
| 378 | | OR | NBR | 70 | | | 3,50 | 3,00 | 4,02 |
| 3927 | | OR | NBR | 70 | | | 4,00 | 3,00 | 4,02 |

| CODICE | NUOVO CODICE | TIPO | MAT. | SH | RIFERIMENTI USA | RIFERIMENTI UK | d1 mm | d2 mm | LISTINO 5-2016 X 100 € |
|---|---|---|---|---|---|---|---|---|---|
| 41608 | | OR | NBR | 70 | | | 4,50 | 3,00 | 4,02 |
| 3937 | 182483 | OR | NBR | 70 | | | 5,00 | 3,00 | 4,15 |
| 3940 | 182484 | OR | NBR | 70 | | | 5,50 | 3,00 | 4,29 |
| 3949 | | OR | NBR | 70 | | | 6,00 | 3,00 | 4,49 |
| 3955 | | OR | NBR | 70 | | | 6,50 | 3,00 | 4,71 |
| 3960 | 191800 | OR | NBR | 70 | | | 7,00 | 3,00 | 4,71 |
| 41644 | 182852 | OR | NBR | 70 | | | 7,50 | 3,00 | 4,85 |
| 3974 | | OR | NBR | 70 | | | 8,00 | 3,00 | 4,85 |
| 436 | | OR | NBR | 70 | | | 8,50 | 3,00 | 4,98 |
| 3992 | | OR | NBR | 70 | | | 9,00 | 3,00 | 5,26 |
| 3999 | | OR | NBR | 70 | | | 9,50 | 3,00 | 5,40 |
| 4013 | | OR | NBR | 70 | | | 10,00 | 3,00 | 5,54 |
| 41666 | | OR | NBR | 70 | | | 10,50 | 3,00 | 5,68 |
| 4024 | 182500 | OR | NBR | 70 | | | 11,00 | 3,00 | 5,82 |
| 4029 | | OR | NBR | 70 | | | 11,50 | 3,00 | 6,09 |
| 4037 | 182503 | OR | NBR | 70 | | | 12,00 | 3,00 | 6,23 |
| 41683 | | OR | NBR | 70 | | | 12,50 | 3,00 | 6,51 |
| 4051 | 182505 | OR | NBR | 70 | | | 13,00 | 3,00 | 6,51 |
| 36388 | | OR | NBR | 70 | | | 13,50 | 3,00 | 6,65 |
| 4065 | 182507 | OR | NBR | 70 | | | 14,00 | 3,00 | 6,78 |
| 529 | | OR | NBR | 70 | | | 14,50 | 3,00 | 6,92 |
| 4075 | 192097 | OR | NBR | 70 | | | 15,00 | 3,00 | 7,27 |
| 4083 | | OR | NBR | 70 | | | 15,50 | 3,00 | 7,75 |
| 4091 | 182512 | OR | NBR | 70 | | | 16,00 | 3,00 | 8,03 |
| 41713 | | OR | NBR | 70 | | | 16,50 | 3,00 | 8,31 |
| 4103 | | OR | NBR | 70 | | | 17,00 | 3,00 | 8,66 |
| 41199 | | OR | NBR | 70 | | | 17,50 | 3,00 | 9,00 |
| 4118 | | OR | NBR | 70 | | | 18,00 | 3,00 | 9,14 |
| 24478 | | OR | NBR | 70 | | | 18,50 | 3,00 | 9,28 |
| 4128 | | OR | NBR | 70 | | | 19,00 | 3,00 | 9,42 |
| 5556 | | OR | NBR | 70 | | | 19,50 | 3,00 | 9,69 |
| 4150 | 182524 | OR | NBR | 70 | | | 20,00 | 3,00 | 10,38 |
| 41781 | | OR | NBR | 70 | | | 20,50 | 3,00 | 10,38 |
| 4160 | | OR | NBR | 70 | | | 21,00 | 3,00 | 10,66 |
| 21380 | | OR | NBR | 70 | | | 21,50 | 3,00 | 10,80 |
| 4166 | 182528 | OR | NBR | 70 | | | 22,00 | 3,00 | 10,94 |
| 21381 | | OR | NBR | 70 | | | 22,50 | 3,00 | 11,29 |
| 4174 | | OR | NBR | 70 | | | 23,00 | 3,00 | 11,43 |
| 668 | | OR | NBR | 70 | | | 23,50 | 3,00 | 11,57 |
| 4184 | 182530 | OR | NBR | 70 | | | 24,00 | 3,00 | 11,77 |
| 3740 | | OR | NBR | 70 | | | 24,20 | 3,00 | 11,91 |
| 21382 | | OR | NBR | 70 | | | 24,50 | 3,00 | 12,05 |
| 41822 | | OR | NBR | 70 | | | 24,60 | 3,00 | 12,18 |
| 4192 | 182531 | OR | NBR | 70 | | | 25,00 | 3,00 | 12,40 |
| 21383 | | OR | NBR | 70 | | | 25,50 | 3,00 | 12,81 |
| 4203 | | OR | NBR | 70 | | | 26,00 | 3,00 | 13,09 |
| 3742 | 182413 | OR | NBR | 70 | | | 26,20 | 3,00 | 13,43 |
| 21384 | | OR | NBR | 70 | | | 26,50 | 3,00 | 13,78 |
| 4214 | 192689 | OR | NBR | 70 | | | 27,00 | 3,00 | 13,92 |

| CODICE | NUOVO CODICE | TIPO | MAT. | SH | RIFERIMENTI USA | RIFERIMENTI UK | d1 mm | d2 mm | LISTINO 5-2016 X 100 € |
|---|---|---|---|---|---|---|---|---|---|
| 21385 | | OR | NBR | 70 | | | 27,50 | 3,00 | 14,20 |
| 4221 | | OR | NBR | 70 | | | 28,00 | 3,00 | 14,20 |
| 41855 | 182864 | OR | NBR | 70 | | | 28,50 | 3,00 | 14,34 |
| 4230 | 191382 | OR | NBR | 70 | | | 29,00 | 3,00 | 14,47 |
| 3744 | | OR | NBR | 70 | | | 29,20 | 3,00 | 14,68 |
| 21386 | | OR | NBR | 70 | | | 29,50 | 3,00 | 14,81 |
| 4239 | | OR | NBR | 70 | | | 30,00 | 3,00 | 15,03 |
| 41871 | | OR | NBR | 70 | | | 30,50 | 3,00 | 15,17 |
| 4248 | | OR | NBR | 70 | | | 31,00 | 3,00 | 15,30 |
| 21387 | | OR | NBR | 70 | | | 31,50 | 3,00 | 15,44 |
| 4255 | | OR | NBR | 70 | | | 32,00 | 3,00 | 15,58 |
| 3746 | | OR | NBR | 70 | | | 32,20 | 3,00 | 15,72 |
| 21388 | | OR | NBR | 70 | | | 32,50 | 3,00 | 15,86 |
| 4264 | 190594 | OR | NBR | 70 | | | 33,00 | 3,00 | 16,00 |
| 41890 | | OR | NBR | 70 | | | 33,50 | 3,00 | 16,27 |
| 4272 | | OR | NBR | 70 | | | 34,00 | 3,00 | 16,55 |
| 3747 | | OR | NBR | 70 | | | 34,20 | 3,00 | 16,55 |
| 21389 | | OR | NBR | 70 | | | 34,50 | 3,00 | 16,69 |
| 4280 | | OR | NBR | 70 | | | 35,00 | 3,00 | 16,83 |
| 21390 | | OR | NBR | 70 | | | 35,50 | 3,00 | 16,97 |
| 4289 | 182553 | OR | NBR | 70 | | | 36,00 | 3,00 | 17,10 |
| 3749 | | OR | NBR | 70 | | | 36,20 | 3,00 | 17,24 |
| 21391 | | OR | NBR | 70 | | | 36,50 | 3,00 | 17,38 |
| 4299 | | OR | NBR | 70 | | | 37,00 | 3,00 | 17,66 |
| 24538 | | OR | NBR | 70 | | | 37,47 | 3,00 | 17,80 |
| 21392 | | OR | NBR | 70 | | | 37,50 | 3,00 | 17,94 |
| 4307 | | OR | NBR | 70 | | | 38,00 | 3,00 | 18,07 |
| 880 | | OR | NBR | 70 | | | 38,50 | 3,00 | 18,21 |
| 4315 | | OR | NBR | 70 | | | 39,00 | 3,00 | 18,35 |
| 3751 | | OR | NBR | 70 | | | 39,20 | 3,00 | 18,49 |
| 21393 | | OR | NBR | 70 | | | 39,50 | 3,00 | 18,83 |
| 4325 | | OR | NBR | 70 | | | 40,00 | 3,00 | 19,18 |
| 4335 | | OR | NBR | 70 | | | 41,00 | 3,00 | 19,46 |
| 21394 | | OR | NBR | 70 | | | 41,50 | 3,00 | 20,09 |
| 4341 | | OR | NBR | 70 | | | 42,00 | 3,00 | 20,35 |
| 3753 | | OR | NBR | 70 | | | 42,20 | 3,00 | 20,70 |
| 21395 | | OR | NBR | 70 | | | 42,50 | 3,00 | 20,98 |
| 4350 | 182561 | OR | NBR | 70 | | | 43,00 | 3,00 | 21,53 |
| 21539 | | OR | NBR | 70 | | | 43,69 | 3,00 | 21,95 |
| 192413 | | OR | NBR | 70 | | | 44,00 | 3,00 | 22,23 |
| 3755 | | OR | NBR | 70 | | | 44,20 | 3,00 | 22,50 |
| 21396 | 182738 | OR | NBR | 70 | | | 44,50 | 3,00 | 22,86 |
| 4367 | | OR | NBR | 70 | | | 45,00 | 3,00 | 23,12 |
| 4375 | 193687 | OR | NBR | 70 | | | 46,00 | 3,00 | 23,61 |
| 4383 | 192056 | OR | NBR | 70 | | | 47,00 | 3,00 | 24,24 |
| 4389 | 191855 | OR | NBR | 70 | | | 48,00 | 3,00 | 24,86 |
| 4394 | 182568 | OR | NBR | 70 | | | 49,00 | 3,00 | 25,61 |
| 3759 | 192235 | OR | NBR | 70 | | | 49,50 | 3,00 | 25,90 |
| 4401 | | OR | NBR | 70 | | | 50,00 | 3,00 | 26,18 |

| CODICE | NUOVO CODICE | TIPO | MAT. | SH | RIFERIMENTI USA | RIFERIMENTI UK | d1 mm | d2 mm | LISTINO 5-2016 X 100 € |
|---|---|---|---|---|---|---|---|---|---|
| 1039 | 192613 | OR | NBR | 70 | | | 51,00 | 3,00 | 26,87 |
| 4409 | | OR | NBR | 70 | | | 52,00 | 3,00 | 27,15 |
| 1065 | | OR | NBR | 70 | | | 53,00 | 3,00 | 27,42 |
| 4416 | 191875 | OR | NBR | 70 | | | 54,00 | 3,00 | 27,98 |
| 3761 | 193024 | OR | NBR | 70 | | | 54,50 | 3,00 | 28,12 |
| 4425 | 193749 | OR | NBR | 70 | | | 55,00 | 3,00 | 28,26 |
| 4431 | 192243 | OR | NBR | 70 | | | 56,00 | 3,00 | 28,39 |
| 4436 | | OR | NBR | 70 | | | 57,00 | 3,00 | 28,53 |
| 4441 | 182577 | OR | NBR | 70 | | | 58,00 | 3,00 | 28,67 |
| 4445 | | OR | NBR | 70 | | | 59,00 | 3,00 | 28,81 |
| 21541 | | OR | NBR | 70 | | | 59,36 | 3,00 | 28,95 |
| 3765 | | OR | NBR | 70 | | | 59,50 | 3,00 | 29,22 |
| 4450 | | OR | NBR | 70 | | | 60,00 | 3,00 | 29,36 |
| 1157 | | OR | NBR | 70 | | | 61,00 | 3,00 | 29,50 |
| 4457 | | OR | NBR | 70 | | | 62,00 | 3,00 | 29,78 |
| 2783 | | OR | NBR | 70 | | | 63,00 | 3,00 | 29,92 |
| 4468 | 192059 | OR | NBR | 70 | | | 64,00 | 3,00 | 30,05 |
| 3769 | | OR | NBR | 70 | | | 64,50 | 3,00 | 30,19 |
| 4473 | | OR | NBR | 70 | | | 65,00 | 3,00 | 30,40 |
| 4478 | | OR | NBR | 70 | | | 66,00 | 3,00 | 30,53 |
| 4482 | 192076 | OR | NBR | 70 | | | 67,00 | 3,00 | 30,75 |
| 4486 | 182588 | OR | NBR | 70 | | | 68,00 | 3,00 | 30,89 |
| 4894 | | OR | NBR | 70 | | | 69,00 | 3,00 | 30,89 |
| 3770 | | OR | NBR | 70 | | | 69,50 | 3,00 | 30,89 |
| 4494 | | OR | NBR | 70 | | | 70,00 | 3,00 | 31,92 |
| 4502 | | OR | NBR | 70 | | | 71,00 | 3,00 | 32,13 |
| 4504 | | OR | NBR | 70 | | | 72,00 | 3,00 | 33,44 |
| 2784 | | OR | NBR | 70 | | | 73,00 | 3,00 | 33,44 |
| 4514 | | OR | NBR | 70 | | | 74,00 | 3,00 | 34,27 |
| 3771 | | OR | NBR | 70 | | | 74,50 | 3,00 | 34,27 |
| 4519 | | OR | NBR | 70 | | | 75,00 | 3,00 | 35,93 |
| 4526 | | OR | NBR | 70 | | | 76,00 | 3,00 | 35,93 |
| 5344 | | OR | NBR | 70 | | | 77,00 | 3,00 | 37,46 |
| 4532 | | OR | NBR | 70 | | | 78,00 | 3,00 | 37,46 |
| 4536 | | OR | NBR | 70 | | | 79,00 | 3,00 | 38,29 |
| 3772 | 192074 | OR | NBR | 70 | | | 79,50 | 3,00 | 38,56 |
| 4541 | 193540 | OR | NBR | 70 | | | 80,00 | 3,00 | 38,98 |
| 23653 | | OR | NBR | 70 | | | 81,00 | 3,00 | 38,98 |
| 4549 | | OR | NBR | 70 | | | 82,00 | 3,00 | 40,09 |
| 4554 | | OR | NBR | 70 | | | 83,00 | 3,00 | 40,09 |
| 4555 | | OR | NBR | 70 | | | 84,00 | 3,00 | 40,92 |
| 3773 | 182416 | OR | NBR | 70 | | | 84,50 | 3,00 | 40,92 |
| 4559 | | OR | NBR | 70 | | | 85,00 | 3,00 | 41,61 |
| 4565 | 182598 | OR | NBR | 70 | | | 86,00 | 3,00 | 41,61 |
| 1386 | | OR | NBR | 70 | | | 86,50 | 3,00 | 42,04 |
| 42197 | | OR | NBR | 70 | | | 87,00 | 3,00 | 42,44 |
| 4568 | | OR | NBR | 70 | | | 88,00 | 3,00 | 42,44 |
| 4572 | | OR | NBR | 70 | | | 89,00 | 3,00 | 43,21 |
| 4575 | | OR | NBR | 70 | | | 90,00 | 3,00 | 43,21 |

| CODICE | NUOVO CODICE | TIPO | MAT. | SH | RIFERIMENTI USA | RIFERIMENTI UK | d1 mm | d2 mm | LISTINO 5-2016 X 100 € |
|---|---|---|---|---|---|---|---|---|---|
| 23659 | | OR | NBR | 70 | | | 91,00 | 3,00 | 43,96 |
| 4579 | | OR | NBR | 70 | | | 92,00 | 3,00 | 44,73 |
| 4581 | | OR | NBR | 70 | | | 93,00 | 3,00 | 45,50 |
| 4585 | | OR | NBR | 70 | | | 94,00 | 3,00 | 45,50 |
| 3776 | | OR | NBR | 70 | | | 94,50 | 3,00 | 46,25 |
| 4588 | | OR | NBR | 70 | | | 95,00 | 3,00 | 46,25 |
| 4595 | | OR | NBR | 70 | | | 96,00 | 3,00 | 47,22 |
| 42247 | 182883 | OR | NBR | 70 | | | 97,00 | 3,00 | 47,92 |
| 4600 | 192414 | OR | NBR | 70 | | | 98,00 | 3,00 | 48,75 |
| 4604 | | OR | NBR | 70 | | | 99,00 | 3,00 | 49,44 |
| 3777 | | OR | NBR | 70 | | | 99,50 | 3,00 | 50,41 |
| 4608 | 182603 | OR | NBR | 70 | | | 100,00 | 3,00 | 51,24 |
| 1504 | | OR | NBR | 70 | | | 101,00 | 3,00 | 52,76 |
| 3778 | | OR | NBR | 70 | | | 101,50 | 3,00 | 53,53 |
| 4614 | | OR | NBR | 70 | | | 102,00 | 3,00 | 54,42 |
| 1513 | | OR | NBR | 70 | | | 103,00 | 3,00 | 54,42 |
| 1518 | 193781 | OR | NBR | 70 | | | 104,00 | 3,00 | 56,08 |
| 3779 | 192678 | OR | NBR | 70 | | | 104,50 | 3,00 | 56,08 |
| 4619 | 191833 | OR | NBR | 70 | | | 105,00 | 3,00 | 57,75 |
| 4623 | | OR | NBR | 70 | | | 106,00 | 3,00 | 57,75 |
| 26281 | | OR | NBR | 70 | | | 107,00 | 3,00 | 59,41 |
| 4626 | | OR | NBR | 70 | | | 108,00 | 3,00 | 59,41 |
| 22160 | | OR | NBR | 70 | | | 109,00 | 3,00 | 60,24 |
| 3780 | | OR | NBR | 70 | | | 109,50 | 3,00 | 60,24 |
| 4628 | | OR | NBR | 70 | | | 110,00 | 3,00 | 61,84 |
| 1575 | | OR | NBR | 70 | | | 111,00 | 3,00 | 61,84 |
| 4635 | | OR | NBR | 70 | | | 112,00 | 3,00 | 62,67 |
| 23670 | | OR | NBR | 70 | | | 113,00 | 3,00 | 62,67 |
| 1588 | | OR | NBR | 70 | | | 114,00 | 3,00 | 63,50 |
| 3781 | | OR | NBR | 70 | | | 114,50 | 3,00 | 63,50 |
| 4644 | | OR | NBR | 70 | | | 115,00 | 3,00 | 65,16 |
| 1608 | | OR | NBR | 70 | | | 116,00 | 3,00 | 65,16 |
| 2703 | | OR | NBR | 70 | | | 117,00 | 3,00 | 66,82 |
| 4653 | 182611 | OR | NBR | 70 | | | 118,00 | 3,00 | 66,82 |
| 4657 | | OR | NBR | 70 | | | 119,00 | 3,00 | 67,65 |
| 3782 | 182418 | OR | NBR | 70 | | | 119,50 | 3,00 | 67,65 |
| 4660 | | OR | NBR | 70 | | | 120,00 | 3,00 | 69,31 |
| 4665 | | OR | NBR | 70 | | | 122,00 | 3,00 | 69,65 |
| 23678 | | OR | NBR | 70 | | | 123,00 | 3,00 | 70,91 |
| 4971 | | OR | NBR | 70 | | | 124,00 | 3,00 | 72,57 |
| 3783 | | OR | NBR | 70 | | | 124,50 | 3,00 | 72,57 |
| 4671 | | OR | NBR | 70 | | | 125,00 | 3,00 | 74,23 |
| 5358 | 191366 | OR | NBR | 70 | | | 126,00 | 3,00 | 75,06 |
| 4678 | | OR | NBR | 70 | | | 127,00 | 3,00 | 75,06 |
| 4679 | | OR | NBR | 70 | | | 128,00 | 3,00 | 75,89 |
| 23325 | | OR | NBR | 70 | | | 129,00 | 3,00 | 75,89 |
| 3785 | | OR | NBR | 70 | | | 129,50 | 3,00 | 75,89 |
| 4681 | | OR | NBR | 70 | | | 130,00 | 3,00 | 79,14 |
| 4686 | | OR | NBR | 70 | | | 132,00 | 3,00 | 82,48 |

| CODICE | NUOVO CODICE | TIPO | MAT. | SH | RIFERIMENTI USA | RIFERIMENTI UK | d1 mm | d2 mm | LISTINO 5-2016 X 100 € |
|---|---|---|---|---|---|---|---|---|---|
| 42395 | | OR | NBR | 70 | | | 133,00 | 3,00 | 84,14 |
| 4692 | | OR | NBR | 70 | | | 134,00 | 3,00 | 85,80 |
| 21397 | | OR | NBR | 70 | | | 134,50 | 3,00 | 86,63 |
| 4696 | | OR | NBR | 70 | | | 135,00 | 3,00 | 87,46 |
| 22185 | | OR | NBR | 70 | | | 136,00 | 3,00 | 87,46 |
| 4702 | | OR | NBR | 70 | | | 137,00 | 3,00 | 88,22 |
| 1730 | | OR | NBR | 70 | | | 138,00 | 3,00 | 88,22 |
| 4707 | | OR | NBR | 70 | | | 139,00 | 3,00 | 89,05 |
| 3786 | | OR | NBR | 70 | | | 139,50 | 3,00 | 89,05 |
| 4711 | | OR | NBR | 70 | | | 140,00 | 3,00 | 91,54 |
| 4976 | | OR | NBR | 70 | | | 142,00 | 3,00 | 93,20 |
| 23684 | | OR | NBR | 70 | | | 143,00 | 3,00 | 93,20 |
| 4718 | | OR | NBR | 70 | | | 144,00 | 3,00 | 94,86 |
| 3787 | | OR | NBR | 70 | | | 144,50 | 3,00 | 94,86 |
| 4719 | | OR | NBR | 70 | | | 145,00 | 3,00 | 96,46 |
| 2787 | | OR | NBR | 70 | | | 146,00 | 3,00 | 96,46 |
| 23228 | | OR | NBR | 70 | | | 147,00 | 3,00 | 97,98 |
| 4722 | | OR | NBR | 70 | | | 148,00 | 3,00 | 97,98 |
| 1781 | | OR | NBR | 70 | | | 149,00 | 3,00 | 98,95 |
| 21398 | | OR | NBR | 70 | | | 149,50 | 3,00 | 98,95 |
| 4727 | | OR | NBR | 70 | | | 150,00 | 3,00 | 100,61 |
| 42470 | | OR | NBR | 70 | | | 151,00 | 3,00 | 165,94 |
| 1796 | | OR | NBR | 70 | | | 152,00 | 3,00 | 168,65 |
| 23229 | 182766 | OR | NBR | 70 | | | 153,00 | 3,00 | 168,65 |
| 2789 | | OR | NBR | 70 | | | 154,00 | 3,00 | 170,08 |
| 21399 | | OR | NBR | 70 | | | 154,50 | 3,00 | 170,08 |
| 4735 | | OR | NBR | 70 | | | 155,00 | 3,00 | 172,80 |
| 4739 | 182620 | OR | NBR | 70 | | | 156,00 | 3,00 | 172,80 |
| 1824 | 181967 | OR | NBR | 70 | | | 157,00 | 3,00 | 175,51 |
| 42491 | | OR | NBR | 70 | | | 158,00 | 3,00 | 175,51 |
| 1833 | | OR | NBR | 70 | | | 159,00 | 3,00 | 176,82 |
| 21400 | | OR | NBR | 70 | | | 159,50 | 3,00 | 176,82 |
| 4745 | 190585 | OR | NBR | 70 | | | 160,00 | 3,00 | 179,53 |
| 42505 | | OR | NBR | 70 | | | 161,00 | 3,00 | 183,65 |
| 4986 | | OR | NBR | 70 | | | 162,00 | 3,00 | 187,78 |
| 42651 | | OR | NBR | 70 | | | 163,00 | 3,00 | 197,25 |
| 4753 | | OR | NBR | 70 | | | 164,00 | 3,00 | 201,37 |
| 21401 | | OR | NBR | 70 | | | 164,50 | 3,00 | 204,09 |
| 5368 | | OR | NBR | 70 | | | 165,00 | 3,00 | 204,09 |
| 42669 | | OR | NBR | 70 | | | 166,00 | 3,00 | 205,39 |
| 42672 | | OR | NBR | 70 | | | 167,00 | 3,00 | 205,39 |
| 23234 | | OR | NBR | 70 | | | 168,00 | 3,00 | 205,39 |
| 34969 | | OR | NBR | 70 | | | 169,00 | 3,00 | 208,11 |
| 5215 | | OR | NBR | 70 | | | 169,50 | 3,00 | 208,11 |
| 4763 | | OR | NBR | 70 | | | 170,00 | 3,00 | 208,11 |
| 42687 | | OR | NBR | 70 | | | 171,00 | 3,00 | 208,11 |
| 42692 | | OR | NBR | 70 | | | 172,00 | 3,00 | 212,23 |
| 42696 | | OR | NBR | 70 | | | 173,00 | 3,00 | 212,23 |
| 4769 | | OR | NBR | 70 | | | 174,00 | 3,00 | 214,97 |

| CODICE | NUOVO CODICE | TIPO | MAT. | SH | RIFERIMENTI USA | RIFERIMENTI UK | d1 mm | d2 mm | LISTINO 5-2016 X 100 € |
|---|---|---|---|---|---|---|---|---|---|
| 21402 | | OR | NBR | 70 | | | 174,50 | 3,00 | 214,97 |
| 5370 | | OR | NBR | 70 | | | 175,00 | 3,00 | 214,97 |
| 42704 | | OR | NBR | 70 | | | 176,00 | 3,00 | 217,68 |
| 23237 | | OR | NBR | 70 | | | 177,00 | 3,00 | 217,68 |
| 42712 | | OR | NBR | 70 | | | 178,00 | 3,00 | 224,52 |
| 4776 | | | NBR | 70 | | | 179,00 | 3,00 | 224,52 |
| 21403 | | OR | NBR | 70 | | | 179,50 | 3,00 | 224,52 |
| 4777 | | OR | NBR | 70 | | | 180,00 | 3,00 | 231,25 |
| | | | | JAPANESE STANDARD JIS 240 P+G | | | | | |
| 23526 | 182791 | OR | NBR | 70 | | | 24,40 | 3,10 | 8,65 |
| 23545 | 182793 | OR | NBR | 70 | | | 29,40 | 3,10 | 10,75 |
| 23571 | 182795 | OR | NBR | 70 | | | 34,40 | 3,10 | 12,74 |
| 23586 | 182796 | OR | NBR | 70 | | | 39,40 | 3,10 | 16,48 |
| 23596 | 182798 | OR | NBR | 70 | | | 44,40 | 3,10 | 16,48 |
| 23606 | 182799 | OR | NBR | 70 | | | 49,40 | 3,10 | 17,65 |
| 25505 | 182838 | OR | NBR | 70 | | | 54,40 | 3,10 | 20,34 |
| 23627 | 182800 | OR | NBR | 70 | | | 59,40 | 3,10 | 24,78 |
| 23634 | 182801 | OR | NBR | 70 | | | 64,40 | 3,10 | 26,30 |
| 23643 | 182802 | OR | NBR | 70 | | | 69,40 | 3,10 | 26,89 |
| 23648 | 182803 | OR | NBR | 70 | | | 74,40 | 3,10 | 36,01 |
| 23652 | 182804 | OR | NBR | 70 | | | 79,40 | 3,10 | 36,41 |
| 23655 | 182806 | OR | NBR | 70 | | | 84,40 | 3,10 | 37,13 |
| 23657 | 182807 | OR | NBR | 70 | | | 89,40 | 3,10 | 37,52 |
| 23661 | 182808 | OR | NBR | 70 | | | 94,40 | 3,10 | 39,16 |
| 145515 | 183107 | OR | NBR | 70 | | | 99,40 | 3,10 | 41,38 |
| 23667 | | OR | NBR | 70 | | | 104,40 | 3,10 | 45,59 |
| 23669 | 182810 | OR | NBR | 70 | | | 109,40 | 3,10 | 54,59 |
| 145662 | 183110 | OR | NBR | 70 | | | 114,40 | 3,10 | 60,09 |
| 145702 | | OR | NBR | 70 | | | 119,40 | 3,10 | 60,91 |
| 145758 | 183113 | OR | NBR | 70 | | | 124,40 | 3,10 | 61,49 |
| 145786 | 184187 | OR | NBR | 70 | | | 129,40 | 3,10 | 64,79 |
| 45371 | 182933 | OR | NBR | 70 | | | 134,40 | 3,10 | 66,05 |
| 23683 | 182813 | OR | NBR | 70 | | | 139,40 | 3,10 | 68,21 |
| 23685 | 182814 | OR | NBR | 70 | | | 144,40 | 3,10 | 70,28 |
| | | | | FRENCH STANDARD R | | | | | |
| 4122 | | OR | NBR | 70 | | | 18,30 | 3,60 | 10,99 |
| 5484 | | OR | NBR | 70 | | | 19,80 | 3,60 | 11,60 |
| 5166 | | OR | NBR | 70 | | | 21,30 | 3,60 | 12,43 |
| 5448 | | OR | NBR | 70 | | | 23,00 | 3,60 | 13,26 |
| 5489 | | OR | NBR | 70 | | | 24,60 | 3,60 | 13,86 |
| 4209 | 182536 | OR | NBR | 70 | | | 26,20 | 3,60 | 14,35 |
| 5494 | | OR | NBR | 70 | | | 27,80 | 3,60 | 14,95 |
| 5445 | | OR | NBR | 70 | | | 29,30 | 3,60 | 15,53 |
| 5518 | | OR | NBR | 70 | | | 30,80 | 3,60 | 16,13 |
| 5181 | | OR | NBR | 70 | | | 32,50 | 3,60 | 16,62 |
| 21543 | | OR | NBR | 70 | | | 34,10 | 3,60 | 17,45 |
| 21544 | | OR | NBR | 70 | | | 35,60 | 3,60 | 17,82 |
| 4303 | | OR | NBR | 70 | | | 37,30 | 3,60 | 18,89 |

| CODICE | NUOVO CODICE | TIPO | MAT. | SH | RIFERIMENTI USA | RIFERIMENTI UK | d1 mm | d2 mm | LISTINO 5-2016 X 100 € |
|---|---|---|---|---|---|---|---|---|---|
| | | | | METRIC STANDARD | | | | | |
| 3928 | | OR | NBR | 70 | | | 4,00 | 4,00 | 6,23 |
| 2619 | | OR | NBR | 70 | | | 5,00 | 4,00 | 6,23 |
| 407 | 181870 | OR | NBR | 70 | | | 6,00 | 4,00 | 6,58 |
| 420 | | OR | NBR | 70 | | | 7,00 | 4,00 | 6,58 |
| 3977 | 182494 | OR | NBR | 70 | | | 8,00 | 4,00 | 6,92 |
| 3994 | | OR | NBR | 70 | | | 9,00 | 4,00 | 7,27 |
| 4015 | | OR | NBR | 70 | | | 10,00 | 4,00 | 8,52 |
| 4026 | | OR | NBR | 70 | | | 11,00 | 4,00 | 9,28 |
| 4040 | 182504 | OR | NBR | 70 | | | 12,00 | 4,00 | 10,04 |
| 4053 | | OR | NBR | 70 | | | 13,00 | 4,00 | 10,80 |
| 4067 | | OR | NBR | 70 | | | 14,00 | 4,00 | 10,94 |
| 4078 | | OR | NBR | 70 | | | 15,00 | 4,00 | 11,15 |
| 4093 | 191381 | OR | NBR | 70 | | | 16,00 | 4,00 | 12,40 |
| 4105 | | OR | NBR | 70 | | | 17,00 | 4,00 | 13,29 |
| 4120 | | OR | NBR | 70 | | | 18,00 | 4,00 | 13,92 |
| 4129 | | OR | NBR | 70 | | | 19,00 | 4,00 | 14,34 |
| 4153 | | OR | NBR | 70 | | | 20,00 | 4,00 | 14,68 |
| 4917 | | OR | NBR | 70 | | | 21,00 | 4,00 | 15,03 |
| 4168 | | OR | NBR | 70 | | | 22,00 | 4,00 | 15,17 |
| 4176 | 193932 | OR | NBR | 70 | | | 23,00 | 4,00 | 15,30 |
| 4186 | | OR | NBR | 70 | | | 24,00 | 4,00 | 15,44 |
| 4194 | | OR | NBR | 70 | | | 25,00 | 4,00 | 15,86 |
| 4205 | | OR | NBR | 70 | | | 26,00 | 4,00 | 17,38 |
| 4215 | | OR | NBR | 70 | | | 27,00 | 4,00 | 17,94 |
| 4223 | | OR | NBR | 70 | | | 28,00 | 4,00 | 18,21 |
| 38664 | | OR | NBR | 70 | | | 29,00 | 4,00 | 18,49 |
| 4241 | | OR | NBR | 70 | | | 30,00 | 4,00 | 18,83 |
| 4250 | | OR | NBR | 70 | | | 31,00 | 4,00 | 19,73 |
| 4257 | | OR | NBR | 70 | | | 32,00 | 4,00 | 20,35 |
| 807 | | OR | NBR | 70 | | | 33,00 | 4,00 | 21,75 |
| 4275 | 182548 | OR | NBR | 70 | | | 34,00 | 4,00 | 22,86 |
| 4283 | 182551 | OR | NBR | 70 | | | 35,00 | 4,00 | 23,95 |
| 4291 | 182554 | OR | NBR | 70 | | | 36,00 | 4,00 | 24,66 |
| 4301 | | OR | NBR | 70 | | | 37,00 | 4,00 | 25,35 |
| 4309 | | OR | NBR | 70 | | | 38,00 | 4,00 | 26,04 |
| 885 | 181898 | OR | NBR | 70 | | | 39,00 | 4,00 | 26,73 |
| 4327 | 182558 | OR | NBR | 70 | | | 40,00 | 4,00 | 27,84 |
| 914 | | OR | NBR | 70 | | | 41,00 | 4,00 | 28,12 |
| 4343 | | OR | NBR | 70 | | | 42,00 | 4,00 | 28,39 |
| 4352 | | OR | NBR | 70 | | | 43,00 | 4,00 | 28,95 |
| 4360 | | OR | NBR | 70 | | | 44,00 | 4,00 | 29,50 |
| 4369 | | OR | NBR | 70 | | | 45,00 | 4,00 | 30,05 |
| 4377 | | OR | NBR | 70 | | | 46,00 | 4,00 | 30,89 |
| 4385 | 182567 | OR | NBR | 70 | | | 47,00 | 4,00 | 31,30 |
| 4390 | | OR | NBR | 70 | | | 48,00 | 4,00 | 31,78 |
| 4396 | | OR | NBR | 70 | | | 49,00 | 4,00 | 32,41 |
| 4403 | | OR | NBR | 70 | | | 50,00 | 4,00 | 33,03 |
| 4406 | | OR | NBR | 70 | | | 51,00 | 4,00 | 33,79 |

| CODICE | NUOVO CODICE | TIPO | MAT. | SH | RIFERIMENTI USA | RIFERIMENTI UK | d1 mm | d2 mm | LISTINO 5-2016 X 100 € |
|---|---|---|---|---|---|---|---|---|---|
| 4411 | | OR | NBR | 70 | | | 52,00 | 4,00 | 34,55 |
| 1067 | 181915 | OR | NBR | 70 | | | 53,00 | 4,00 | 35,04 |
| 4419 | | OR | NBR | 70 | | | 54,00 | 4,00 | 35,80 |
| 4427 | | OR | NBR | 70 | | | 55,00 | 4,00 | 36,56 |
| 4432 | | OR | NBR | 70 | | | 56,00 | 4,00 | 37,32 |
| 1107 | | OR | NBR | 70 | | | 57,00 | 4,00 | 38,15 |
| 4443 | | OR | NBR | 70 | | | 58,00 | 4,00 | 39,53 |
| 4446 | | OR | NBR | 70 | | | 59,00 | 4,00 | 39,81 |
| 4452 | 182581 | OR | NBR | 70 | | | 60,00 | 4,00 | 40,09 |
| 1160 | | OR | NBR | 70 | | | 61,00 | 4,00 | 40,92 |
| 4458 | | OR | NBR | 70 | | | 62,00 | 4,00 | 41,07 |
| 4465 | | OR | NBR | 70 | | | 63,00 | 4,00 | 41,61 |
| 4469 | | OR | NBR | 70 | | | 64,00 | 4,00 | 42,10 |
| 4475 | 182586 | OR | NBR | 70 | | | 65,00 | 4,00 | 42,44 |
| 4479 | | OR | NBR | 70 | | | 66,00 | 4,00 | 42,87 |
| 4483 | | OR | NBR | 70 | | | 67,00 | 4,00 | 43,35 |
| 4488 | 182589 | OR | NBR | 70 | | | 68,00 | 4,00 | 43,62 |
| 1231 | | OR | NBR | 70 | | | 69,00 | 4,00 | 43,96 |
| 4496 | | OR | NBR | 70 | | | 70,00 | 4,00 | 45,22 |
| 1254 | | OR | NBR | 70 | | | 71,00 | 4,00 | 45,50 |
| 4506 | | OR | NBR | 70 | | | 72,00 | 4,00 | 46,25 |
| 5068 | 182655 | OR | NBR | 70 | | | 73,00 | 4,00 | 47,30 |
| 4515 | | OR | NBR | 70 | | | 74,00 | 4,00 | 47,78 |
| 4521 | | OR | NBR | 70 | | | 75,00 | 4,00 | 48,27 |
| 4528 | | OR | NBR | 70 | | | 76,00 | 4,00 | 50,27 |
| 1304 | 181935 | OR | NBR | 70 | | | 77,00 | 4,00 | 51,38 |
| 4533 | | OR | NBR | 70 | | | 78,00 | 4,00 | 52,48 |
| 22777 | | OR | NBR | 70 | | | 79,00 | 4,00 | 52,90 |
| 4543 | | OR | NBR | 70 | | | 80,00 | 4,00 | 54,28 |
| 42170 | | OR | NBR | 70 | | | 81,00 | 4,00 | 54,91 |
| 4551 | 182594 | OR | NBR | 70 | | | 82,00 | 4,00 | 55,53 |
| 42183 | | OR | NBR | 70 | | | 83,00 | 4,00 | 55,81 |
| 1360 | | OR | NBR | 70 | | | 84,00 | 4,00 | 56,22 |
| 4560 | | OR | NBR | 70 | | | 85,00 | 4,00 | 57,05 |
| 4953 | | OR | NBR | 70 | | | 86,00 | 4,00 | 57,33 |
| 4567 | | OR | NBR | 70 | | | 87,00 | 4,00 | 57,82 |
| 4570 | | OR | NBR | 70 | | | 88,00 | 4,00 | 58,58 |
| 1409 | 181946 | OR | NBR | 70 | | | 89,00 | 4,00 | 60,10 |
| 4577 | | OR | NBR | 70 | | | 90,00 | 4,00 | 60,10 |
| 5302 | | OR | NBR | 70 | | | 91,00 | 4,00 | 60,87 |
| 4580 | | OR | NBR | 70 | | | 92,00 | 4,00 | 61,70 |
| 5099 | | OR | NBR | 70 | | | 93,00 | 4,00 | 62,39 |
| 4957 | | OR | NBR | 70 | | | 94,00 | 4,00 | 63,22 |
| 4590 | | OR | NBR | 70 | | | 95,00 | 4,00 | 63,91 |
| 4596 | | OR | NBR | 70 | | | 96,00 | 4,00 | 64,74 |
| 23189 | | OR | NBR | 70 | | | 97,00 | 4,00 | 65,44 |
| 4602 | | OR | NBR | 70 | | | 98,00 | 4,00 | 66,27 |
| 23665 | 182809 | OR | NBR | 70 | | | 99,00 | 4,00 | 67,10 |
| 4609 | | OR | NBR | 70 | | | 100,00 | 4,00 | 68,62 |

| CODICE | NUOVO CODICE | TIPO | MAT. | SH | RIFERIMENTI USA | RIFERIMENTI UK | d1 mm | d2 mm | LISTINO 5-2016 X 100 € |
|---|---|---|---|---|---|---|---|---|---|
| 23194 | | OR | NBR | 70 | | | 101,00 | 4,00 | 71,53 |
| 4615 | | OR | NBR | 70 | | | 102,00 | 4,00 | 72,77 |
| 42271 | | OR | NBR | 70 | | | 103,00 | 4,00 | 73,96 |
| 4617 | | OR | NBR | 70 | | | 104,00 | 4,00 | 75,13 |
| 4620 | | OR | NBR | 70 | | | 105,00 | 4,00 | 76,45 |
| 5351 | | OR | NBR | 70 | | | 106,00 | 4,00 | 77,62 |
| 1554 | | OR | NBR | 70 | | | 107,00 | 4,00 | 78,87 |
| 4627 | | OR | NBR | 70 | | | 108,00 | 4,00 | 80,05 |
| 1565 | | OR | NBR | 70 | | | 109,00 | 4,00 | 81,29 |
| 4630 | | OR | NBR | 70 | | | 110,00 | 4,00 | 82,48 |
| 42299 | | OR | NBR | 70 | | | 111,00 | 4,00 | 83,43 |
| 4636 | | OR | NBR | 70 | | | 112,00 | 4,00 | 84,48 |
| 5098 | | OR | NBR | 70 | | | 113,00 | 4,00 | 85,45 |
| 4640 | | OR | NBR | 70 | | | 114,00 | 4,00 | 86,34 |
| 4645 | | OR | NBR | 70 | | | 115,00 | 4,00 | 87,31 |
| 1609 | | OR | NBR | 70 | | | 116,00 | 4,00 | 88,35 |
| 1616 | | OR | NBR | 70 | | | 117,00 | 4,00 | 89,32 |
| 4654 | | OR | NBR | 70 | | | 118,00 | 4,00 | 90,29 |
| 1622 | | OR | NBR | 70 | | | 119,00 | 4,00 | 91,20 |
| 4662 | | OR | NBR | 70 | | | 120,00 | 4,00 | 92,23 |
| 23676 | | OR | NBR | 70 | | | 121,00 | 4,00 | 93,14 |
| 4666 | | OR | NBR | 70 | | | 122,00 | 4,00 | 94,03 |
| 42349 | | OR | NBR | 70 | | | 123,00 | 4,00 | 94,94 |
| 4669 | | OR | NBR | 70 | | | 124,00 | 4,00 | 95,83 |
| 4673 | | OR | NBR | 70 | | | 125,00 | 4,00 | 96,66 |
| 4676 | | OR | NBR | 70 | | | 126,00 | 4,00 | 97,63 |
| 1668 | | OR | NBR | 70 | | | 127,00 | 4,00 | 98,54 |
| 1674 | | OR | NBR | 70 | | | 128,00 | 4,00 | 99,37 |
| 4974 | | OR | NBR | 70 | | | 129,00 | 4,00 | 100,26 |
| 4683 | | OR | NBR | 70 | | | 130,00 | 4,00 | 101,31 |
| 1694 | | OR | NBR | 70 | | | 131,00 | 4,00 | 102,62 |
| 4687 | 182615 | OR | NBR | 70 | | | 132,00 | 4,00 | 103,80 |
| 1703 | | OR | NBR | 70 | | | 133,00 | 4,00 | 105,04 |
| 4694 | | OR | NBR | 70 | | | 134,00 | 4,00 | 106,35 |
| 5362 | | OR | NBR | 70 | | | 135,00 | 4,00 | 106,98 |
| 5363 | | OR | NBR | 70 | | | 136,00 | 4,00 | 108,86 |
| 5364 | | OR | NBR | 70 | | | 137,00 | 4,00 | 110,44 |
| 4704 | | OR | NBR | 70 | | | 138,00 | 4,00 | 111,69 |
| 1736 | | OR | NBR | 70 | | | 139,00 | 4,00 | 112,73 |
| 4712 | | OR | NBR | 70 | | | 140,00 | 4,00 | 114,12 |
| 42431 | | OR | NBR | 70 | | | 141,00 | 4,00 | 115,43 |
| 4715 | | OR | NBR | 70 | | | 142,00 | 4,00 | 116,75 |
| 1754 | | OR | NBR | 70 | | | 143,00 | 4,00 | 117,99 |
| 4656 | | OR | NBR | 70 | | | 144,00 | 4,00 | 119,30 |
| 1762 | | OR | NBR | 70 | | | 145,00 | 4,00 | 120,55 |
| 4978 | | OR | NBR | 70 | | | 146,00 | 4,00 | 121,66 |
| 42455 | | OR | NBR | 70 | | | 147,00 | 4,00 | 123,04 |
| 1777 | | OR | NBR | 70 | | | 148,00 | 4,00 | 123,87 |
| 24625 | | OR | NBR | 70 | | | 149,00 | 4,00 | 125,55 |

| CODICE | NUOVO CODICE | TIPO | MAT. | SH | RIFERIMENTI USA | RIFERIMENTI UK | d1 mm | d2 mm | LISTINO 5-2016 X 100 € |
|---|---|---|---|---|---|---|---|---|---|
| 4728 | | OR | NBR | 70 | | | 150,00 | 4,00 | 126,86 |
| 42472 | 183743 | OR | NBR | 70 | | | 151,00 | 4,00 | 202,02 |
| 42475 | 182892 | OR | NBR | 70 | | | 152,00 | 4,00 | 202,78 |
| 2716 | | OR | NBR | 70 | | | 153,00 | 4,00 | 204,63 |
| 24130 | 183605 | OR | NBR | 70 | | | 154,00 | 4,00 | 207,79 |
| 4736 | 182618 | OR | NBR | 70 | | | 155,00 | 4,00 | 209,41 |
| 4740 | | OR | NBR | 70 | | | 156,00 | 4,00 | 212,57 |
| 42490 | 182894 | OR | NBR | 70 | | | 157,00 | 4,00 | 215,72 |
| 4742 | | OR | NBR | 70 | | | 158,00 | 4,00 | 217,24 |
| 2790 | | OR | NBR | 70 | | | 159,00 | 4,00 | 220,39 |
| 4746 | 182621 | OR | NBR | 70 | | | 160,00 | 4,00 | 223,55 |
| 42507 | 183747 | OR | NBR | 70 | | | 161,00 | 4,00 | 226,69 |
| 4750 | | OR | NBR | 70 | | | 162,00 | 4,00 | 229,84 |
| 1853 | | OR | NBR | 70 | | | 163,00 | 4,00 | 233,00 |
| 2791 | | OR | NBR | 70 | | | 164,00 | 4,00 | 236,15 |
| 4756 | | OR | NBR | 70 | | | 165,00 | 4,00 | 237,67 |
| 2792 | | OR | NBR | 70 | | | 166,00 | 4,00 | 237,67 |
| 22230 | | OR | NBR | 70 | | | 167,00 | 4,00 | 239,29 |
| 1872 | | OR | NBR | 70 | | | 168,00 | 4,00 | 239,29 |
| 42679 | | OR | NBR | 70 | | | 169,00 | 4,00 | 240,83 |
| 4765 | | OR | NBR | 70 | | | 170,00 | 4,00 | 240,83 |
| 42688 | | OR | NBR | 70 | | | 171,00 | 4,00 | 240,83 |
| 4988 | | OR | NBR | 70 | | | 172,00 | 4,00 | 243,96 |
| 23691 | | OR | NBR | 70 | | | 173,00 | 4,00 | 247,12 |
| 23235 | 182768 | OR | NBR | 70 | | | 174,00 | 4,00 | 247,12 |
| 4770 | 182623 | OR | NBR | 70 | | | 175,00 | 4,00 | 248,76 |
| 42706 | | OR | NBR | 70 | | | 176,00 | 4,00 | 250,27 |
| 4774 | | OR | NBR | 70 | | | 177,00 | 4,00 | 251,89 |
| 22411 | | OR | NBR | 70 | | | 178,00 | 4,00 | 258,21 |
| 38102 | | OR | NBR | 70 | | | 179,00 | 4,00 | 264,52 |
| 4778 | | OR | NBR | 70 | | | 180,00 | 4,00 | 270,71 |
| 4992 | | OR | NBR | 70 | | | 181,00 | 4,00 | 272,98 |
| 1930 | | OR | NBR | 70 | | | 182,00 | 4,00 | 274,18 |
| 42731 | | OR | NBR | 70 | | | 183,00 | 4,00 | 275,48 |
| 42733 | | OR | NBR | 70 | | | 184,00 | 4,00 | 276,79 |
| 4783 | | OR | NBR | 70 | | | 185,00 | 4,00 | 277,99 |
| 23242 | | OR | NBR | 70 | | | 186,00 | 4,00 | 279,50 |
| 1950 | | OR | NBR | 70 | | | 187,00 | 4,00 | 280,81 |
| 4786 | | OR | NBR | 70 | | | 188,00 | 4,00 | 282,11 |
| 42749 | | OR | NBR | 70 | | | 189,00 | 4,00 | 283,31 |
| 1960 | | OR | NBR | 70 | | | 190,00 | 4,00 | 285,81 |
| 42760 | | OR | NBR | 70 | | | 191,00 | 4,00 | 289,94 |
| 4791 | | OR | NBR | 70 | | | 192,00 | 4,00 | 293,96 |
| 42765 | | OR | NBR | 70 | | | 193,00 | 4,00 | 297,77 |
| 42753 | | OR | NBR | 70 | | | 194,00 | 4,00 | 301,78 |
| 5401 | | OR | NBR | 70 | | | 195,00 | 4,00 | 305,59 |
| 42776 | | OR | NBR | 70 | | | 196,00 | 4,00 | 308,20 |
| 42778 | | OR | NBR | 70 | | | 197,00 | 4,00 | 312,22 |
| 5402 | | OR | NBR | 70 | | | 198,00 | 4,00 | 316,24 |

| CODICE | NUOVO CODICE | TIPO | MAT. | SH | RIFERIMENTI USA | RIFERIMENTI UK | d1 mm | d2 mm | LISTINO 5-2016 X 100 € |
|---|---|---|---|---|---|---|---|---|---|
| 42785 | | OR | NBR | 70 | | | 199,00 | 4,00 | 318,85 |
| 4858 | | OR | NBR | 70 | | | 200,00 | 4,00 | 321,35 |
| 408 | | OR | NBR | 70 | | | 6,00 | 4,50 | 11,19 |
| 433 | | OR | NBR | 70 | | | 8,00 | 4,50 | 12,06 |
| 442 | | OR | NBR | 70 | | | 9,00 | 4,50 | 12,06 |
| 41658 | | OR | NBR | 70 | | | 9,50 | 4,50 | 13,36 |
| 459 | | OR | NBR | 70 | | | 10,00 | 4,50 | 14,67 |
| 466 | | OR | NBR | 70 | | | 10,50 | 4,50 | 15,21 |
| 475 | | OR | NBR | 70 | | | 11,00 | 4,50 | 15,76 |
| 495 | | OR | NBR | 70 | | | 12,00 | 4,50 | 17,28 |
| 4054 | | OR | NBR | 70 | | | 13,00 | 4,50 | 18,37 |
| 88054 | | OR | NBR | 70 | | | 15,00 | 4,50 | 19,13 |
| 544 | | OR | NBR | 70 | | | 15,50 | 4,50 | 20,22 |
| 5147 | | OR | NBR | 70 | | | 16,00 | 4,50 | 21,29 |
| 4106 | | OR | NBR | 70 | | | 17,00 | 4,50 | 22,70 |
| 4913 | | OR | NBR | 70 | | | 18,00 | 4,50 | 23,80 |
| 41763 | 182858 | OR | NBR | 70 | | | 19,00 | 4,50 | 24,66 |
| 606 | | OR | NBR | 70 | | | 20,00 | 4,50 | 25,21 |
| 4918 | | OR | NBR | 70 | | | 21,00 | 4,50 | 25,55 |
| 4919 | | OR | NBR | 70 | | | 21,50 | 4,50 | 25,97 |
| 2779 | 182058 | OR | NBR | 70 | | | 22,00 | 4,50 | 25,97 |
| 41796 | | OR | NBR | 70 | | | 22,50 | 4,50 | 26,20 |
| 656 | 181881 | OR | NBR | 70 | | | 23,00 | 4,50 | 26,51 |
| 41813 | | OR | NBR | 70 | | | 24,00 | 4,50 | 26,85 |
| 4923 | | OR | NBR | 70 | | | 24,50 | 4,50 | 27,27 |
| 689 | | OR | NBR | 70 | | | 25,00 | 4,50 | 27,50 |
| 41836 | | OR | NBR | 70 | | | 26,00 | 4,50 | 30,22 |
| 721 | | OR | NBR | 70 | | | 27,00 | 4,50 | 30,97 |
| 5244 | | OR | NBR | 70 | | | 27,50 | 4,50 | 31,18 |
| 41848 | | OR | NBR | 70 | | | 28,00 | 4,50 | 31,52 |
| 41859 | | OR | NBR | 70 | | | 28,50 | 4,50 | 31,73 |
| 41857 | 182865 | OR | NBR | 70 | | | 29,00 | 4,50 | 32,07 |
| 756 | | OR | NBR | 70 | | | 29,50 | 4,50 | 32,83 |
| 764 | | OR | NBR | 70 | | | 30,00 | 4,50 | 32,83 |
| 4251 | | OR | NBR | 70 | | | 31,00 | 4,50 | 34,13 |
| 4926 | 182639 | OR | NBR | 70 | | | 31,50 | 4,50 | 36,09 |
| 4258 | | OR | NBR | 70 | | | 32,00 | 4,50 | 36,74 |
| 41887 | 182866 | OR | NBR | 70 | | | 33,00 | 4,50 | 38,70 |
| 41897 | | OR | NBR | 70 | | | 34,00 | 4,50 | 39,35 |
| 41902 | | OR | NBR | 70 | | | 34,50 | 4,50 | 41,96 |
| 834 | | OR | NBR | 70 | | | 35,00 | 4,50 | 43,24 |
| 41909 | | OR | NBR | 70 | | | 35,50 | 4,50 | 44,34 |
| 848 | | OR | NBR | 70 | | | 36,00 | 4,50 | 44,55 |
| 4302 | | OR | NBR | 70 | | | 37,00 | 4,50 | 45,43 |
| 41923 | | OR | NBR | 70 | | | 37,50 | 4,50 | 46,19 |
| 4310 | | OR | NBR | 70 | | | 38,00 | 4,50 | 46,73 |
| 41938 | | OR | NBR | 70 | | | 39,00 | 4,50 | 47,28 |
| 4328 | | OR | NBR | 70 | | | 40,00 | 4,50 | 49,34 |
| 41947 | | OR | NBR | 70 | | | 40,50 | 4,50 | 50,10 |

| CODICE | NUOVO CODICE | TIPO | MAT. | SH | RIFERIMENTI USA | RIFERIMENTI UK | d1 mm | d2 mm | LISTINO 5-2016 X 100 € |
|---|---|---|---|---|---|---|---|---|---|
| 2659 | | OR | NBR | 70 | | | 41,00 | 4,50 | 50,65 |
| 927 | | OR | NBR | 70 | | | 42,00 | 4,50 | 50,65 |
| 941 | | OR | NBR | 70 | | | 43,00 | 4,50 | 51,41 |
| 2607 | | OR | NBR | 70 | | | 44,00 | 4,50 | 52,48 |
| 960 | 181901 | OR | NBR | 70 | | | 45,00 | 4,50 | 53,19 |
| 972 | | OR | NBR | 70 | | | 46,00 | 4,50 | 53,78 |
| 5565 | | OR | NBR | 70 | | | 47,00 | 4,50 | 54,88 |
| 993 | | OR | NBR | 70 | | | 48,00 | 4,50 | 56,18 |
| 4397 | | OR | NBR | 70 | | | 49,00 | 4,50 | 57,28 |
| 1017 | 181909 | OR | NBR | 70 | | | 50,00 | 4,50 | 58,35 |
| 1042 | | OR | NBR | 70 | | | 51,00 | 4,50 | 59,02 |
| 5456 | | OR | NBR | 70 | | | 53,00 | 4,50 | 60,10 |
| 1097 | | OR | NBR | 70 | | | 56,00 | 4,50 | 65,31 |
| 1108 | 181922 | OR | NBR | 70 | | | 57,00 | 4,50 | 65,63 |
| 1143 | | OR | NBR | 70 | | | 60,00 | 4,50 | 69,54 |
| 42027 | | OR | NBR | 70 | | | 61,00 | 4,50 | 70,85 |
| 1176 | | OR | NBR | 70 | | | 63,00 | 4,50 | 72,15 |
| 42049 | | OR | NBR | 70 | | | 64,00 | 4,50 | 72,15 |
| 1192 | 181928 | OR | NBR | 70 | | | 65,00 | 4,50 | 73,46 |
| 42060 | | OR | NBR | 70 | | | 66,00 | 4,50 | 74,76 |
| 1226 | | OR | NBR | 70 | | | 68,00 | 4,50 | 76,07 |
| 1232 | 181932 | OR | NBR | 70 | | | 69,00 | 4,50 | 76,61 |
| 1242 | | OR | NBR | 70 | | | 70,00 | 4,50 | 77,16 |
| 4948 | | OR | NBR | 70 | | | 71,00 | 4,50 | 77,71 |
| 1268 | 180240 | OR | NBR | 70 | | | 73,00 | 4,50 | 79,98 |
| 1275 | | OR | NBR | 70 | | | 74,00 | 4,50 | 81,29 |
| 1282 | | OR | NBR | 70 | | | 75,00 | 4,50 | 82,59 |
| 1291 | | OR | NBR | 70 | | | 76,00 | 4,50 | 84,00 |
| 1326 | | OR | NBR | 70 | | | 80,00 | 4,50 | 93,13 |
| 1340 | | OR | NBR | 70 | | | 81,00 | 4,50 | 94,23 |
| 1355 | | OR | NBR | 70 | | | 83,00 | 4,50 | 95,74 |
| 1363 | | OR | NBR | 70 | | | 85,00 | 4,50 | 97,36 |
| 1378 | | OR | NBR | 70 | | | 86,00 | 4,50 | 97,30 |
| 1410 | | OR | NBR | 70 | | | 89,00 | 4,50 | 99,21 |
| 2598 | 182043 | OR | NBR | 70 | | | 90,00 | 4,50 | 100,75 |
| 1432 | | OR | NBR | 70 | | | 92,00 | 4,50 | 102,05 |
| 4582 | | OR | NBR | 70 | | | 93,50 | 4,50 | 104,98 |
| 4958 | | OR | NBR | 70 | | | 95,00 | 4,50 | 105,95 |
| 1475 | | OR | NBR | 70 | | | 97,50 | 4,50 | 110,20 |
| 5349 | | OR | NBR | 70 | | | 98,00 | 4,50 | 110,20 |
| 145518 | | OR | NBR | 70 | | | 99,50 | 4,50 | 115,42 |
| 1495 | | OR | NBR | 70 | | | 100,00 | 4,50 | 115,42 |
| 4612 | 182605 | OR | NBR | 70 | | | 100,50 | 4,50 | 115,42 |
| 1505 | | OR | NBR | 70 | | | 101,00 | 4,50 | 116,17 |
| 42275 | | OR | NBR | 70 | | | 103,50 | 4,50 | 119,43 |
| 1530 | | OR | NBR | 70 | | | 105,00 | 4,50 | 122,04 |
| 2691 | | OR | NBR | 70 | | | 106,00 | 4,50 | 124,65 |
| 4631 | | OR | NBR | 70 | | | 110,00 | 4,50 | 135,09 |
| 4646 | | OR | NBR | 70 | | | 115,00 | 4,50 | 140,41 |

| CODICE | NUOVO CODICE | TIPO | MAT. | SH | RIFERIMENTI USA | RIFERIMENTI UK | d1 mm | d2 mm | LISTINO 5-2016 X 100 € |
|---|---|---|---|---|---|---|---|---|---|
| 1619 | | OR | NBR | 70 | | | 118,00 | 4,50 | 144,33 |
| 1628 | | OR | NBR | 70 | | | 120,00 | 4,50 | 148,22 |
| 1640 | | OR | NBR | 70 | | | 122,00 | 4,50 | 152,13 |
| 1654 | | OR | NBR | 70 | | | 124,00 | 4,50 | 154,74 |
| 4973 | | OR | NBR | 70 | | | 126,00 | 4,50 | 157,46 |
| 42367 | | OR | NBR | 70 | | | 128,00 | 4,50 | 160,07 |
| 1686 | | OR | NBR | 70 | | | 130,00 | 4,50 | 162,68 |
| 21018 | | OR | NBR | 70 | | | 131,50 | 4,50 | 163,66 |
| 42400 | | OR | NBR | 70 | | | 134,50 | 4,50 | 170,50 |
| 42414 | | OR | NBR | 70 | | | 137,00 | 4,50 | 175,72 |
| 1744 | | OR | NBR | 70 | | | 140,00 | 4,50 | 182,35 |
| 42427 | | OR | NBR | 70 | | | 140,50 | 4,50 | 182,35 |
| 4729 | | OR | NBR | 70 | | | 150,00 | 4,50 | 203,33 |
| 1803 | | OR | NBR | 70 | | | 153,00 | 4,50 | 207,24 |
| 5090 | | OR | NBR | 70 | | | 155,00 | 4,50 | 209,85 |
| 88065 | | OR | NBR | 70 | | | 157,00 | 4,50 | 217,79 |
| 1838 | | OR | NBR | 70 | | | 160,00 | 4,50 | 225,61 |
| 1860 | 181971 | OR | NBR | 70 | | | 165,00 | 4,50 | 240,07 |
| 5091 | | OR | NBR | 70 | | | 172,00 | 4,50 | 246,57 |
| 1916 | | OR | NBR | 70 | | | 178,00 | 4,50 | 259,72 |
| 1921 | | OR | NBR | 70 | | | 180,00 | 4,50 | 272,87 |
| 1941 | | OR | NBR | 70 | | | 185,00 | 4,50 | 295,26 |
| 1947 | | OR | NBR | 70 | | | 186,00 | 4,50 | 301,78 |
| 1958 | | OR | NBR | 70 | | | 189,50 | 4,50 | 334,51 |
| 1970 | | OR | NBR | 70 | | | 192,00 | 4,50 | 338,63 |
| 2034 | | OR | NBR | 70 | | | 208,00 | 4,50 | 380,36 |
| 2060 | | OR | NBR | 70 | | | 215,00 | 4,50 | 389,49 |
| 2080 | | OR | NBR | 70 | | | 218,50 | 4,50 | 400,14 |
| 2099 | | OR | NBR | 70 | | | 225,00 | 4,50 | 415,90 |
| 2109 | 181992 | OR | NBR | 70 | | | 227,00 | 4,50 | 418,40 |
| 2171 | | OR | NBR | 70 | | | 250,00 | 4,50 | 472,39 |
| 2211 | | OR | NBR | 70 | | | 267,00 | 4,50 | 489,35 |
| 2742 | | OR | NBR | 70 | | | 280,00 | 4,50 | 524,89 |
| 2307 | | OR | NBR | 70 | | | 315,00 | 4,50 | 649,32 |
| 384 | | OR | NBR | 70 | | | 4,00 | 5,00 | 8,31 |
| 3938 | | OR | NBR | 70 | | | 5,00 | 5,00 | 8,72 |
| 22721 | | OR | NBR | 70 | | | 6,00 | 5,00 | 9,07 |
| 421 | | OR | NBR | 70 | | | 7,00 | 5,00 | 9,49 |
| 3978 | | OR | NBR | 70 | | | 8,00 | 5,00 | 9,90 |
| 443 | | OR | NBR | 70 | | | 9,00 | 5,00 | 10,32 |
| 4016 | | OR | NBR | 70 | | | 10,00 | 5,00 | 11,15 |
| 4027 | | OR | NBR | 70 | | | 11,00 | 5,00 | 11,57 |
| 4137 | | OR | NBR | 70 | | | 12,00 | 5,00 | 11,91 |
| 2773 | | OR | NBR | 70 | | | 13,00 | 5,00 | 13,37 |
| 522 | | OR | NBR | 70 | | | 14,00 | 5,00 | 14,54 |
| 4079 | | OR | NBR | 70 | | | 15,00 | 5,00 | 15,65 |
| 4094 | | OR | NBR | 70 | | | 16,00 | 5,00 | 16,34 |
| 2776 | | OR | NBR | 70 | | | 17,00 | 5,00 | 16,55 |
| 4121 | | OR | NBR | 70 | | | 18,00 | 5,00 | 16,75 |

| CODICE | NUOVO CODICE | TIPO | MAT. | SH | RIFERIMENTI USA | RIFERIMENTI UK | d1 mm | d2 mm | LISTINO 5-2016 X 100 € |
|---|---|---|---|---|---|---|---|---|---|
| 4130 | | OR | NBR | 70 | | | 19,00 | 5,00 | 17,38 |
| 4154 | 182525 | OR | NBR | 70 | | | 20,00 | 5,00 | 18,00 |
| 5164 | | OR | NBR | 70 | | | 21,00 | 5,00 | 18,55 |
| 4169 | | OR | NBR | 70 | | | 22,00 | 5,00 | 18,97 |
| 4177 | | OR | NBR | 70 | | | 23,00 | 5,00 | 19,32 |
| 4187 | | OR | NBR | 70 | | | 24,00 | 5,00 | 20,09 |
| 4195 | | OR | NBR | 70 | | | 25,00 | 5,00 | 21,32 |
| 4207 | | OR | NBR | 70 | | | 26,00 | 5,00 | 22,29 |
| 4216 | | OR | NBR | 70 | | | 27,00 | 5,00 | 23,06 |
| 4224 | 182539 | OR | NBR | 70 | | | 28,00 | 5,00 | 23,27 |
| 749 | | OR | NBR | 70 | | | 29,00 | 5,00 | 23,47 |
| 4242 | | OR | NBR | 70 | | | 30,00 | 5,00 | 23,95 |
| 778 | | OR | NBR | 70 | | | 31,00 | 5,00 | 24,52 |
| 4259 | | OR | NBR | 70 | | | 32,00 | 5,00 | 25,27 |
| 4266 | | OR | NBR | 70 | | | 33,00 | 5,00 | 25,61 |
| 4276 | | OR | NBR | 70 | | | 34,00 | 5,00 | 26,38 |
| 4284 | 182552 | OR | NBR | 70 | | | 35,00 | 5,00 | 27,98 |
| 4292 | | OR | NBR | 70 | | | 36,00 | 5,00 | 28,46 |
| 858 | | OR | NBR | 70 | | | 37,00 | 5,00 | 28,87 |
| 4311 | | OR | NBR | 70 | | | 38,00 | 5,00 | 29,70 |
| 2761 | | OR | NBR | 70 | | | 39,00 | 5,00 | 30,53 |
| 4329 | | OR | NBR | 70 | | | 40,00 | 5,00 | 31,37 |
| 915 | | OR | NBR | 70 | | | 41,00 | 5,00 | 32,20 |
| 4344 | | OR | NBR | 70 | | | 42,00 | 5,00 | 33,03 |
| 4353 | | OR | NBR | 70 | | | 43,00 | 5,00 | 33,86 |
| 4361 | | OR | NBR | 70 | | | 44,00 | 5,00 | 34,69 |
| 4370 | | OR | NBR | 70 | | | 45,00 | 5,00 | 35,18 |
| 973 | | OR | NBR | 70 | | | 46,00 | 5,00 | 35,45 |
| 981 | | OR | NBR | 70 | | | 47,00 | 5,00 | 36,29 |
| 4391 | | OR | NBR | 70 | | | 48,00 | 5,00 | 36,98 |
| 41980 | | OR | NBR | 70 | | | 49,00 | 5,00 | 37,32 |
| 4404 | | OR | NBR | 70 | | | 50,00 | 5,00 | 37,81 |
| 1043 | | OR | NBR | 70 | | | 51,00 | 5,00 | 38,29 |
| 1053 | | OR | NBR | 70 | | | 52,00 | 5,00 | 38,78 |
| 4938 | 182640 | OR | NBR | 70 | | | 53,00 | 5,00 | 39,61 |
| 1080 | | OR | NBR | 70 | | | 54,00 | 5,00 | 40,24 |
| 4428 | 182574 | OR | NBR | 70 | | | 55,00 | 5,00 | 40,58 |
| 1098 | | OR | NBR | 70 | | | 56,00 | 5,00 | 42,10 |
| 4939 | | OR | NBR | 70 | | | 57,00 | 5,00 | 42,24 |
| 1121 | | OR | NBR | 70 | | | 58,00 | 5,00 | 42,58 |
| 5186 | | OR | NBR | 70 | | | 59,00 | 5,00 | 43,21 |
| 4453 | 182582 | OR | NBR | 70 | | | 60,00 | 5,00 | 44,53 |
| 1161 | | OR | NBR | 70 | | | 61,00 | 5,00 | 45,36 |
| 4459 | | OR | NBR | 70 | | | 62,00 | 5,00 | 46,19 |
| 2762 | | OR | NBR | 70 | | | 63,00 | 5,00 | 47,02 |
| 1182 | 181927 | OR | NBR | 70 | | | 64,00 | 5,00 | 47,71 |
| 4476 | | OR | NBR | 70 | | | 65,00 | 5,00 | 48,19 |
| 1208 | | OR | NBR | 70 | | | 66,00 | 5,00 | 48,68 |
| 1221 | | OR | NBR | 70 | | | 67,00 | 5,00 | 49,02 |

| CODICE | NUOVO CODICE | TIPO | MAT. | SH | RIFERIMENTI USA | RIFERIMENTI UK | d1 mm | d2 mm | LISTINO 5-2016 X 100 € |
|---|---|---|---|---|---|---|---|---|---|
| 4489 | | OR | NBR | 70 | | | 68,00 | 5,00 | 49,37 |
| 1233 | | OR | NBR | 70 | | | 69,00 | 5,00 | 49,65 |
| 4497 | | OR | NBR | 70 | | | 70,00 | 5,00 | 50,13 |
| 42123 | | OR | NBR | 70 | | | 71,00 | 5,00 | 50,48 |
| 4507 | | OR | NBR | 70 | | | 72,00 | 5,00 | 52,01 |
| 4512 | | OR | NBR | 70 | | | 73,00 | 5,00 | 53,32 |
| 1276 | | OR | NBR | 70 | | | 74,00 | 5,00 | 54,64 |
| 4522 | | OR | NBR | 70 | | | 75,00 | 5,00 | 55,74 |
| 1293 | | OR | NBR | 70 | | | 76,00 | 5,00 | 57,27 |
| 1305 | | OR | NBR | 70 | | | 77,00 | 5,00 | 58,58 |
| 4535 | | OR | NBR | 70 | | | 78,00 | 5,00 | 60,04 |
| 4538 | | OR | NBR | 70 | | | 79,00 | 5,00 | 61,36 |
| 4544 | | OR | NBR | 70 | | | 80,00 | 5,00 | 62,67 |
| 2679 | | OR | NBR | 70 | | | 81,00 | 5,00 | 63,36 |
| 4552 | | OR | NBR | 70 | | | 82,00 | 5,00 | 64,19 |
| 1356 | | OR | NBR | 70 | | | 83,00 | 5,00 | 64,96 |
| 1361 | | OR | NBR | 70 | | | 84,00 | 5,00 | 65,65 |
| 4561 | | OR | NBR | 70 | | | 85,00 | 5,00 | 66,40 |
| 1379 | | OR | NBR | 70 | | | 86,00 | 5,00 | 67,24 |
| 1389 | 181944 | OR | NBR | 70 | | | 87,00 | 5,00 | 67,37 |
| 4571 | | OR | NBR | 70 | | | 88,00 | 5,00 | 68,97 |
| 1411 | | OR | NBR | 70 | | | 89,00 | 5,00 | 69,73 |
| 4578 | | OR | NBR | 70 | | | 90,00 | 5,00 | 70,08 |
| 42223 | | OR | NBR | 70 | | | 91,00 | 5,00 | 70,77 |
| 5082 | | OR | NBR | 70 | | | 92,00 | 5,00 | 71,46 |
| 1441 | | OR | NBR | 70 | | | 93,00 | 5,00 | 72,08 |
| 1451 | | OR | NBR | 70 | | | 94,00 | 5,00 | 72,77 |
| 4591 | | OR | NBR | 70 | | | 95,00 | 5,00 | 73,40 |
| 1468 | | OR | NBR | 70 | | | 96,00 | 5,00 | 74,09 |
| 4959 | | OR | NBR | 70 | | | 97,00 | 5,00 | 74,65 |
| 4603 | | OR | NBR | 70 | | | 98,00 | 5,00 | 75,40 |
| 1484 | | OR | NBR | 70 | | | 99,00 | 5,00 | 75,96 |
| 4610 | | OR | NBR | 70 | | | 100,00 | 5,00 | 76,72 |
| 42266 | | OR | NBR | 70 | | | 101,00 | 5,00 | 123,56 |
| 5081 | | OR | NBR | 70 | | | 102,00 | 5,00 | 125,41 |
| 1515 | | OR | NBR | 70 | | | 103,00 | 5,00 | 127,03 |
| 1519 | | OR | NBR | 70 | | | 104,00 | 5,00 | 128,67 |
| 4621 | 182606 | OR | NBR | 70 | | | 105,00 | 5,00 | 130,29 |
| 1547 | 181956 | OR | NBR | 70 | | | 106,00 | 5,00 | 132,14 |
| 4625 | | OR | NBR | 70 | | | 107,00 | 5,00 | 133,79 |
| 1560 | | OR | NBR | 70 | | | 108,00 | 5,00 | 135,41 |
| 42294 | | OR | NBR | 70 | | | 109,00 | 5,00 | 137,36 |
| 4632 | 182607 | OR | NBR | 70 | | | 110,00 | 5,00 | 138,88 |
| 1576 | | OR | NBR | 70 | | | 111,00 | 5,00 | 140,08 |
| 4637 | | OR | NBR | 70 | | | 112,00 | 5,00 | 141,28 |
| 42305 | | OR | NBR | 70 | | | 113,00 | 5,00 | 142,48 |
| 1589 | | OR | NBR | 70 | | | 114,00 | 5,00 | 143,78 |
| 4647 | 182610 | OR | NBR | 70 | | | 115,00 | 5,00 | 144,85 |
| 42322 | | OR | NBR | 70 | | | 116,00 | 5,00 | 145,95 |

| CODICE | NUOVO CODICE | TIPO | MAT. | SH | RIFERIMENTI USA | RIFERIMENTI UK | d1 mm | d2 mm | LISTINO 5-2016 X 100 € |
|---|---|---|---|---|---|---|---|---|---|
| 24189 | | OR | NBR | 70 | | | 117,00 | 5,00 | 147,04 |
| 4655 | | OR | NBR | 70 | | | 118,00 | 5,00 | 148,35 |
| 42337 | 183727 | OR | NBR | 70 | | | 119,00 | 5,00 | 149,52 |
| 4663 | 179845 | OR | NBR | 70 | | | 120,00 | 5,00 | 150,62 |
| 42342 | | OR | NBR | 70 | | | 121,00 | 5,00 | 151,82 |
| 1641 | | OR | NBR | 70 | | | 122,00 | 5,00 | 152,68 |
| 1650 | | OR | NBR | 70 | | | 123,00 | 5,00 | 153,78 |
| 1655 | | OR | NBR | 70 | | | 124,00 | 5,00 | 156,15 |
| 4674 | 182613 | OR | NBR | 70 | | | 125,00 | 5,00 | 157,46 |
| 5207 | | OR | NBR | 70 | | | 126,00 | 5,00 | 158,76 |
| 1669 | 181962 | OR | NBR | 70 | | | 127,00 | 5,00 | 159,41 |
| 42368 | 182890 | OR | NBR | 70 | | | 128,00 | 5,00 | 160,07 |
| 42374 | | OR | NBR | 70 | | | 129,00 | 5,00 | 161,37 |
| 4684 | | OR | NBR | 70 | | | 130,00 | 5,00 | 162,68 |
| 42382 | | OR | NBR | 70 | | | 131,00 | 5,00 | 163,98 |
| 4688 | | OR | NBR | 70 | | | 132,00 | 5,00 | 164,21 |
| 4690 | | OR | NBR | 70 | | | 133,00 | 5,00 | 164,53 |
| 1710 | | OR | NBR | 70 | | | 134,00 | 5,00 | 165,73 |
| 4698 | 179918 | OR | NBR | 70 | | | 135,00 | 5,00 | 170,50 |
| 1721 | | OR | NBR | 70 | | | 136,00 | 5,00 | 170,50 |
| 42415 | | OR | NBR | 70 | | | 137,00 | 5,00 | 175,72 |
| 1731 | | OR | NBR | 70 | | | 138,00 | 5,00 | 176,58 |
| 42457 | | OR | NBR | 70 | | | 139,00 | 5,00 | 177,89 |
| 4713 | | OR | NBR | 70 | | | 140,00 | 5,00 | 183,65 |
| 42432 | | OR | NBR | 70 | | | 141,00 | 5,00 | 183,65 |
| 1751 | | OR | NBR | 70 | | | 142,00 | 5,00 | 183,65 |
| 42441 | | OR | NBR | 70 | | | 143,00 | 5,00 | 184,31 |
| 1756 | | OR | NBR | 70 | | | 144,00 | 5,00 | 187,25 |
| 4726 | 182616 | OR | NBR | 70 | | | 145,00 | 5,00 | 193,99 |
| 1771 | | OR | NBR | 70 | | | 146,00 | 5,00 | 194,20 |
| 42456 | | OR | NBR | 70 | | | 147,00 | 5,00 | 197,14 |
| 1778 | | OR | NBR | 70 | | | 148,00 | 5,00 | 200,72 |
| 1782 | | OR | NBR | 70 | | | 149,00 | 5,00 | 204,09 |
| 4730 | 182617 | OR | NBR | 70 | | | 150,00 | 5,00 | 207,56 |
| 42473 | | OR | NBR | 70 | | | 151,00 | 5,00 | 211,91 |
| 1797 | | OR | NBR | 70 | | | 152,00 | 5,00 | 216,48 |
| 42480 | | OR | NBR | 70 | | | 153,00 | 5,00 | 223,00 |
| 1809 | | OR | NBR | 70 | | | 154,00 | 5,00 | 229,63 |
| 4801 | 182625 | OR | NBR | 70 | | | 155,00 | 5,00 | 236,15 |
| 42486 | | OR | NBR | 70 | | | 156,00 | 5,00 | 240,07 |
| 1825 | | OR | NBR | 70 | | | 157,00 | 5,00 | 243,96 |
| 1830 | | OR | NBR | 70 | | | 158,00 | 5,00 | 247,88 |
| 42496 | | OR | NBR | 70 | | | 159,00 | 5,00 | 249,31 |
| 4747 | | OR | NBR | 70 | | | 160,00 | 5,00 | 251,89 |
| 42649 | | OR | NBR | 70 | | | 161,00 | 5,00 | 253,85 |
| 1850 | | OR | NBR | 70 | | | 162,00 | 5,00 | 255,70 |
| 42652 | | OR | NBR | 70 | | | 163,00 | 5,00 | 257,76 |
| 1855 | | OR | NBR | 70 | | | 164,00 | 5,00 | 259,72 |
| 4802 | | OR | NBR | 70 | | | 165,00 | 5,00 | 261,78 |

| CODICE | NUOVO CODICE | TIPO | MAT. | SH | RIFERIMENTI USA | RIFERIMENTI UK | d1 mm | d2 mm | LISTINO 5-2016 X 100 € |
|---|---|---|---|---|---|---|---|---|---|
| 42671 | | OR | NBR | 70 | | | 166,00 | 5,00 | 263,53 |
| 1871 | | OR | NBR | 70 | | | 167,00 | 5,00 | 265,59 |
| 4761 | | OR | NBR | 70 | | | 168,00 | 5,00 | 267,65 |
| 42680 | | OR | NBR | 70 | | | 169,00 | 5,00 | 269,61 |
| 4803 | | OR | NBR | 70 | | | 170,00 | 5,00 | 271,67 |
| 42689 | | OR | NBR | 70 | | | 171,00 | 5,00 | 272,98 |
| 42694 | | OR | NBR | 70 | | | 172,00 | 5,00 | 274,18 |
| 1897 | | OR | NBR | 70 | | | 173,00 | 5,00 | 275,48 |
| 42700 | | OR | NBR | 70 | | | 174,00 | 5,00 | 277,54 |
| 4804 | | OR | NBR | 70 | | | 175,00 | 5,00 | 279,50 |
| 42707 | | OR | NBR | 70 | | | 176,00 | 5,00 | 281,35 |
| 42710 | | OR | NBR | 70 | | | 177,00 | 5,00 | 283,31 |
| 42714 | | OR | NBR | 70 | | | 178,00 | 5,00 | 285,37 |
| 23292 | | OR | NBR | 70 | | | 179,00 | 5,00 | 287,33 |
| 4779 | | OR | NBR | 70 | | | 180,00 | 5,00 | 289,18 |
| 42726 | | OR | NBR | 70 | | | 181,00 | 5,00 | 289,94 |
| 1931 | | OR | NBR | 70 | | | 182,00 | 5,00 | 291,14 |
| 42732 | | OR | NBR | 70 | | | 183,00 | 5,00 | 292,44 |
| 24191 | 182819 | OR | NBR | 70 | | | 184,00 | 5,00 | 292,94 |
| 4805 | | OR | NBR | 70 | | | 185,00 | 5,00 | 293,96 |
| 42738 | | OR | NBR | 70 | | | 186,00 | 5,00 | 293,96 |
| 42741 | | OR | NBR | 70 | | | 187,00 | 5,00 | 295,26 |
| 42745 | | OR | NBR | 70 | | | 188,00 | 5,00 | 295,26 |
| 42750 | | OR | NBR | 70 | | | 189,00 | 5,00 | 295,26 |
| 4806 | | OR | NBR | 70 | | | 190,00 | 5,00 | 297,77 |
| 42761 | | OR | NBR | 70 | | | 191,00 | 5,00 | 300,27 |
| 42762 | | OR | NBR | 70 | | | 192,00 | 5,00 | 304,39 |
| 1973 | | OR | NBR | 70 | | | 193,00 | 5,00 | 308,20 |
| 4793 | | OR | NBR | 70 | | | 194,00 | 5,00 | 312,22 |
| 4797 | 182624 | OR | NBR | 70 | | | 195,00 | 5,00 | 316,24 |
| 42777 | | OR | NBR | 70 | | | 196,00 | 5,00 | 318,85 |
| 42780 | | OR | NBR | 70 | | | 197,00 | 5,00 | 326,68 |
| 1990 | | OR | NBR | 70 | | | 198,00 | 5,00 | 334,51 |
| 42786 | | OR | NBR | 70 | | | 199,00 | 5,00 | 342,44 |
| 4859 | | OR | NBR | 70 | | | 200,00 | 5,00 | 354,26 |
| BR. STD METRIC BS 4518 - JAPAN STD JIS 240 P+G - SWEDISH STD SMS 1586 | | | | | | | | | |
| 3794 | | OR | NBR | 70 | | | 44,20 | 5,70 | 35,18 |
| 21436 | | OR | NBR | 70 | | | 44,30 | 5,70 | 35,18 |
| 3795 | | OR | NBR | 70 | | | 45,20 | 5,70 | 36,35 |
| 21438 | | OR | NBR | 70 | | | 45,30 | 5,70 | 36,70 |
| 3797 | 182422 | OR | NBR | 70 | | | 49,20 | 5,70 | 38,22 |
| 21439 | | OR | NBR | 70 | | | 49,30 | 5,70 | 38,22 |
| 3799 | 182423 | OR | NBR | 70 | | | 52,20 | 5,70 | 39,12 |
| 21440 | | OR | NBR | 70 | | | 52,30 | 5,70 | 39,95 |
| 3800 | 182424 | OR | NBR | 70 | | | 54,20 | 5,70 | 43,13 |
| 21441 | | OR | NBR | 70 | | | 54,30 | 5,70 | 43,13 |
| 3801 | | OR | NBR | 70 | | | 55,20 | 5,70 | 47,36 |
| 21442 | | OR | NBR | 70 | | | 55,30 | 5,70 | 47,92 |
| 3803 | 182425 | OR | NBR | 70 | | | 59,20 | 5,70 | 51,04 |

| CODICE | NUOVO CODICE | TIPO | MAT. | SH | RIFERIMENTI USA | RIFERIMENTI UK | d1 mm | d2 mm | LISTINO 5-2016 X 100 € |
|---|---|---|---|---|---|---|---|---|---|
| 21443 | | OR | NBR | 70 | | | 59,30 | 5,70 | 51,04 |
| 42019 | | OR | NBR | 70 | | | 59,70 | 5,70 | 51,04 |
| 3805 | | OR | NBR | 70 | | | 62,20 | 5,70 | 58,30 |
| 21444 | | OR | NBR | 70 | | | 62,30 | 5,70 | 59,68 |
| 3807 | | OR | NBR | 70 | | | 64,20 | 5,70 | 63,77 |
| 21437 | | OR | NBR | 70 | | | 64,30 | 5,70 | 63,77 |
| 42115 | | OR | NBR | 70 | | | 69,00 | 5,70 | 67,79 |
| 3848 | 182457 | OR | NBR | 70 | | | 69,20 | 5,70 | 67,79 |
| 21445 | | OR | NBR | 70 | | | 69,30 | 5,70 | 67,79 |
| 42139 | | OR | NBR | 70 | | | 74,00 | 5,70 | 70,28 |
| 3813 | | OR | NBR | 70 | | | 74,20 | 5,70 | 70,28 |
| 21446 | | OR | NBR | 70 | | | 74,30 | 5,70 | 70,28 |
| 42160 | | OR | NBR | 70 | | | 79,00 | 5,70 | 75,89 |
| 3815 | 182431 | OR | NBR | 70 | | | 79,20 | 5,70 | 75,89 |
| 21447 | | OR | NBR | 70 | | | 79,30 | 5,70 | 75,89 |
| 3816 | | OR | NBR | 70 | | | 81,20 | 5,70 | 76,17 |
| 42186 | | OR | NBR | 70 | | | 84,00 | 5,70 | 79,83 |
| 3818 | 182432 | OR | NBR | 70 | | | 84,20 | 5,70 | 79,83 |
| 21448 | | OR | NBR | 70 | | | 84,30 | 5,70 | 79,83 |
| 42209 | | OR | NBR | 70 | | | 89,00 | 5,70 | 80,94 |
| 3820 | 182434 | OR | NBR | 70 | | | 89,20 | 5,70 | 83,85 |
| 21449 | | OR | NBR | 70 | | | 89,30 | 5,70 | 83,85 |
| 3821 | | OR | NBR | 70 | | | 92,20 | 5,70 | 85,17 |
| 42233 | | OR | NBR | 70 | | | 94,00 | 5,70 | 86,20 |
| 3822 | 182435 | OR | NBR | 70 | | | 94,20 | 5,70 | 86,20 |
| 21450 | | OR | NBR | 70 | | | 94,30 | 5,70 | 86,20 |
| 42259 | | OR | NBR | 70 | | | 99,00 | 5,70 | 87,74 |
| 3824 | | OR | NBR | 70 | | | 99,20 | 5,70 | 87,74 |
| 42280 | | OR | NBR | 70 | | | 104,00 | 5,70 | 90,92 |
| 3825 | 182437 | OR | NBR | 70 | | | 104,20 | 5,70 | 90,92 |
| 21452 | | OR | NBR | 70 | | | 104,30 | 5,70 | 90,92 |
| 42297 | | OR | NBR | 70 | | | 109,00 | 5,70 | 95,69 |
| 3826 | 182438 | OR | NBR | 70 | | | 109,20 | 5,70 | 95,69 |
| 21453 | | OR | NBR | 70 | | | 109,30 | 5,70 | 95,69 |
| 42312 | | OR | NBR | 70 | | | 114,00 | 5,70 | 99,02 |
| 3827 | 182439 | OR | NBR | 70 | | | 114,20 | 5,70 | 99,02 |
| 21454 | | OR | NBR | 70 | | | 114,30 | 5,70 | 99,02 |
| 42338 | | OR | NBR | 70 | | | 119,00 | 5,70 | 107,75 |
| 3828 | | OR | NBR | 70 | | | 119,20 | 5,70 | 107,75 |
| 21455 | | OR | NBR | 70 | | | 119,30 | 5,70 | 107,75 |
| 42355 | | OR | NBR | 70 | | | 124,00 | 5,70 | 115,78 |
| 3829 | 182441 | OR | NBR | 70 | | | 124,20 | 5,70 | 115,78 |
| 21455 | | OR | NBR | 70 | | | 124,30 | 5,70 | 115,78 |
| 3831 | 182442 | OR | NBR | 70 | | | 129,20 | 5,70 | 119,79 |
| 21457 | | OR | NBR | 70 | | | 129,30 | 5,70 | 119,79 |
| 3834 | 182443 | OR | NBR | 70 | | | 134,20 | 5,70 | 127,61 |
| 21458 | | OR | NBR | 70 | | | 134,30 | 5,70 | 131,64 |
| 3835 | 182444 | OR | NBR | 70 | | | 139,20 | 5,70 | 151,71 |
| 21459 | | OR | NBR | 70 | | | 139,30 | 5,70 | 151,71 |

| CODICE | NUOVO CODICE | TIPO | MAT. | SH | RIFERIMENTI USA | RIFERIMENTI UK | d1 mm | d2 mm | LISTINO 5-2016 X 100 € |
|---|---|---|---|---|---|---|---|---|---|
| 3836 | | OR | NBR | 70 | | | 144,20 | 5,70 | 159,54 |
| 21460 | | OR | NBR | 70 | | | 144,30 | 5,70 | 151,71 |
| 3837 | | OR | NBR | 70 | | | 149,20 | 5,70 | 151,71 |
| 21461 | | OR | NBR | 70 | | | 149,30 | 5,70 | 151,71 |
| 3838 | 182447 | OR | NBR | 70 | | | 154,20 | 5,70 | 159,54 |
| 21462 | | OR | NBR | 70 | | | 154,30 | 5,70 | 159,54 |
| 3839 | 182448 | OR | NBR | 70 | | | 159,20 | 5,70 | 179,55 |
| 21463 | | OR | NBR | 70 | | | 159,30 | 5,70 | 183,49 |
| 3840 | | OR | NBR | 70 | | | 164,20 | 5,70 | 191,46 |
| 21464 | | OR | NBR | 70 | | | 164,30 | 5,70 | 191,46 |
| 3841 | 182450 | OR | NBR | 70 | | | 169,20 | 5,70 | 199,49 |
| 21465 | | OR | NBR | 70 | | | 169,30 | 5,70 | 199,49 |
| 3842 | 182451 | OR | NBR | 70 | | | 174,20 | 5,70 | 215,49 |
| 21466 | | OR | NBR | 70 | | | 174,30 | 5,70 | 215,49 |
| 3843 | 182452 | OR | NBR | 70 | | | 179,20 | 5,70 | 223,38 |
| 21467 | | OR | NBR | 70 | | | 179,30 | 5,70 | 223,38 |
| 3844 | 182453 | OR | NBR | 70 | | | 184,20 | 5,70 | 239,38 |
| 21468 | | OR | NBR | 70 | | | 184,30 | 5,70 | 239,38 |
| 3845 | 182454 | OR | NBR | 70 | | | 189,20 | 5,70 | 247,41 |
| 21469 | | OR | NBR | 70 | | | 189,30 | 5,70 | 247,41 |
| 3846 | 182455 | OR | NBR | 70 | | | 194,20 | 5,70 | 255,23 |
| 21470 | | OR | NBR | 70 | | | 194,30 | 5,70 | 255,23 |
| 3847 | 182456 | OR | NBR | 70 | | | 199,20 | 5,70 | 263,20 |
| 21471 | | OR | NBR | 70 | | | 199,30 | 5,70 | 263,20 |
| 3850 | 182459 | OR | NBR | 70 | | | 209,20 | 5,70 | 252,60 |
| 21472 | | OR | NBR | 70 | | | 209,30 | 5,70 | 252,60 |
| 3851 | | OR | NBR | 70 | | | 219,20 | 5,70 | 303,21 |
| 21473 | | OR | NBR | 70 | | | 219,30 | 5,70 | 303,21 |
| 3852 | 182461 | OR | NBR | 70 | | | 229,20 | 5,70 | 311,18 |
| 21474 | | OR | NBR | 70 | | | 229,30 | 5,70 | 311,18 |
| 3853 | | OR | NBR | 70 | | | 239,20 | 5,70 | 319,21 |
| 21475 | | OR | NBR | 70 | | | 239,30 | 5,70 | 319,21 |
| 3854 | | OR | NBR | 70 | | | 249,20 | 5,70 | 335,07 |
| 21476 | | OR | NBR | 70 | | | 249,30 | 5,70 | 335,07 |
| 3855 | 182464 | OR | NBR | 70 | | | 259,20 | 5,70 | 343,10 |
| 21477 | | OR | NBR | 70 | | | 259,30 | 5,70 | 343,10 |
| 3856 | | OR | NBR | 70 | | | 269,20 | 5,70 | 351,14 |
| 21478 | | OR | NBR | 70 | | | 269,30 | 5,70 | 351,14 |
| 3857 | | OR | NBR | 70 | | | 279,20 | 5,70 | 374,95 |
| 21479 | | OR | NBR | 70 | | | 279,30 | 5,70 | 374,95 |
| 5023 | 182648 | OR | NBR | 70 | | | 289,20 | 5,70 | 390,89 |
| 21480 | | OR | NBR | 70 | | | 289,30 | 5,70 | 390,89 |
| 3858 | 182467 | OR | NBR | 70 | | | 299,20 | 5,70 | 414,98 |
| 21481 | | OR | NBR | 70 | | | 299,30 | 5,70 | 414,98 |
| 3859 | | OR | NBR | 70 | | | 319,20 | 5,70 | 446,83 |
| 21482 | | OR | NBR | 70 | | | 319,30 | 5,70 | 446,83 |
| 35658 | | OR | NBR | 70 | | | 329,20 | 5,70 | 494,67 |
| 79903 | | OR | NBR | 70 | | | 329,30 | 5,70 | 494,67 |
| 3860 | 182469 | OR | NBR | 70 | | | 339,20 | 5,70 | 510,67 |

| CODICE | NUOVO CODICE | TIPO | MAT. | SH | RIFERIMENTI USA | RIFERIMENTI UK | d1 mm | d2 mm | LISTINO 5-2016 X 100 € |
|---|---|---|---|---|---|---|---|---|---|
| 21483 | | OR | NBR | 70 | | | 339,30 | 5,70 | 510,67 |
| 3861 | 182470 | OR | NBR | 70 | | | 359,20 | 5,70 | 582,41 |
| 21484 | | OR | NBR | 70 | | | 359,30 | 5,70 | 582,41 |
| 3862 | | OR | NBR | 70 | | | 379,20 | 5,70 | 638,29 |
| 21485 | | OR | NBR | 70 | | | 379,30 | 5,70 | 638,29 |
| 3863 | | OR | NBR | 70 | | | 399,20 | 5,70 | 678,24 |
| 21486 | | OR | NBR | 70 | | | 399,30 | 5,70 | 678,24 |
| 5041 | 182649 | OR | NBR | 70 | | | 419,20 | 5,70 | 718,13 |
| 21487 | | OR | NBR | 70 | | | 419,30 | 5,70 | 718,13 |
| 5049 | 182651 | OR | NBR | 70 | | | 439,20 | 5,70 | 837,78 |
| 21488 | | OR | NBR | 70 | | | 439,30 | 5,70 | 837,78 |
| 5257 | 182694 | OR | NBR | 70 | | | 459,20 | 5,70 | 877,60 |
| 21489 | | OR | NBR | 70 | | | 459,30 | 5,70 | 877,60 |
| 5061 | 182653 | OR | NBR | 70 | | | 479,20 | 5,70 | 917,54 |
| 21490 | | OR | NBR | 70 | | | 479,30 | 5,70 | 917,54 |
| 5065 | | OR | NBR | 70 | | | 499,20 | 5,70 | 957,50 |
| 21491 | | OR | NBR | 70 | | | 499,30 | 5,70 | 957,50 |
| | | | | | METRIC STANDARD | | | | |
| 409 | | OR | NBR | 70 | | | 6,00 | 6,00 | 12,40 |
| 422 | | OR | NBR | 70 | | | 7,00 | 6,00 | 13,23 |
| 445 | | OR | NBR | 70 | | | 9,00 | 6,00 | 14,06 |
| 4017 | | OR | NBR | 70 | | | 10,00 | 6,00 | 14,89 |
| 478 | | OR | NBR | 70 | | | 11,00 | 6,00 | 15,72 |
| 498 | | OR | NBR | 70 | | | 12,00 | 6,00 | 16,55 |
| 508 | | OR | NBR | 70 | | | 13,00 | 6,00 | 17,38 |
| 523 | | OR | NBR | 70 | | | 14,00 | 6,00 | 18,14 |
| 5439 | | OR | NBR | 70 | | | 15,00 | 6,00 | 18,97 |
| 550 | | OR | NBR | 70 | | | 16,00 | 6,00 | 19,80 |
| 5440 | | OR | NBR | 70 | | | 18,00 | 6,00 | 20,63 |
| 20766 | | OR | NBR | 70 | | | 19,00 | 6,00 | 21,46 |
| 598 | | OR | NBR | 70 | | | 19,50 | 6,00 | 21,89 |
| 4155 | | OR | NBR | 70 | | | 20,00 | 6,00 | 22,29 |
| 5165 | | OR | NBR | 70 | | | 21,00 | 6,00 | 23,12 |
| 640 | | OR | NBR | 70 | | | 22,00 | 6,00 | 23,95 |
| 2780 | | OR | NBR | 70 | | | 23,00 | 6,00 | 24,78 |
| 41808 | | OR | NBR | 70 | | | 23,50 | 6,00 | 25,61 |
| 4922 | 182637 | OR | NBR | 70 | | | 24,00 | 6,00 | 26,38 |
| 4196 | 182532 | OR | NBR | 70 | | | 25,00 | 6,00 | 27,21 |
| 706 | | OR | NBR | 70 | | | 26,00 | 6,00 | 28,04 |
| 4217 | | OR | NBR | 70 | | | 27,00 | 6,00 | 28,87 |
| 4225 | | OR | NBR | 70 | | | 28,00 | 6,00 | 29,70 |
| 750 | | OR | NBR | 70 | | | 29,00 | 6,00 | 30,53 |
| 4243 | | OR | NBR | 70 | | | 30,00 | 6,00 | 31,37 |
| 4925 | | OR | NBR | 70 | | | 31,00 | 6,00 | 31,37 |
| 798 | | OR | NBR | 70 | | | 32,00 | 6,00 | 32,20 |
| 808 | | OR | NBR | 70 | | | 33,00 | 6,00 | 32,20 |
| 821 | | OR | NBR | 70 | | | 34,00 | 6,00 | 33,03 |
| 4931 | | OR | NBR | 70 | | | 35,00 | 6,00 | 33,03 |
| 4293 | | OR | NBR | 70 | | | 36,00 | 6,00 | 33,86 |

| CODICE | NUOVO CODICE | TIPO | MAT. | SH | RIFERIMENTI USA | RIFERIMENTI UK | d1 mm | d2 mm | LISTINO 5-2016 X 100 € |
|---|---|---|---|---|---|---|---|---|---|
| 860 | 179890 | OR | NBR | 70 | | | 37,00 | 6,00 | 34,69 |
| 872 | | OR | NBR | 70 | | | 38,00 | 6,00 | 35,45 |
| 22750 | | OR | NBR | 70 | | | 39,00 | 6,00 | 36,29 |
| 41941 | | OR | NBR | 70 | | | 39,50 | 6,00 | 36,29 |
| 899 | 181900 | OR | NBR | 70 | | | 40,00 | 6,00 | 36,29 |
| 22753 | | OR | NBR | 70 | | | 41,00 | 6,00 | 37,12 |
| 24409 | | OR | NBR | 70 | | | 41,50 | 6,00 | 37,53 |
| 929 | | OR | NBR | 70 | | | 42,00 | 6,00 | 37,95 |
| 4354 | | OR | NBR | 70 | | | 43,00 | 6,00 | 38,78 |
| 947 | | OR | NBR | 70 | | | 44,00 | 6,00 | 39,61 |
| 956 | | OR | NBR | 70 | | | 44,50 | 6,00 | 39,61 |
| 961 | | OR | NBR | 70 | | | 45,00 | 6,00 | 39,61 |
| 4378 | | OR | NBR | 70 | | | 46,00 | 6,00 | 40,44 |
| 983 | | OR | NBR | 70 | | | 47,00 | 6,00 | 41,27 |
| 4392 | | OR | NBR | 70 | | | 48,00 | 6,00 | 42,10 |
| 1009 | | OR | NBR | 70 | | | 49,00 | 6,00 | 42,93 |
| 4405 | 182570 | OR | NBR | 70 | | | 50,00 | 6,00 | 43,76 |
| 1046 | 181911 | OR | NBR | 70 | | | 51,00 | 6,00 | 45,36 |
| 5319 | 182701 | OR | NBR | 70 | | | 52,00 | 6,00 | 46,19 |
| 1069 | | OR | NBR | 70 | | | 53,00 | 6,00 | 47,02 |
| 1081 | | OR | NBR | 70 | | | 54,00 | 6,00 | 47,85 |
| 1087 | | OR | NBR | 70 | | | 55,00 | 6,00 | 49,51 |
| 1100 | | OR | NBR | 70 | | | 56,00 | 6,00 | 51,17 |
| 1110 | | OR | NBR | 70 | | | 57,00 | 6,00 | 52,76 |
| 1123 | | OR | NBR | 70 | | | 58,00 | 6,00 | 54,42 |
| 5568 | 182725 | OR | NBR | 70 | | | 59,00 | 6,00 | 55,74 |
| 1135 | | OR | NBR | 70 | | | 59,50 | 6,00 | 56,08 |
| 1146 | | OR | NBR | 70 | | | 60,00 | 6,00 | 57,75 |
| 4454 | 182583 | OR | NBR | 70 | | | 61,00 | 6,00 | 60,24 |
| 1167 | | OR | NBR | 70 | | | 62,00 | 6,00 | 61,84 |
| 4466 | | OR | NBR | 70 | | | 63,00 | 6,00 | 65,16 |
| 1183 | | OR | NBR | 70 | | | 64,00 | 6,00 | 69,31 |
| 1195 | | OR | NBR | 70 | | | 65,00 | 6,00 | 72,57 |
| 1209 | | OR | NBR | 70 | | | 66,00 | 6,00 | 74,23 |
| 1223 | 181931 | OR | NBR | 70 | | | 67,00 | 6,00 | 75,06 |
| 5188 | | OR | NBR | 70 | | | 68,00 | 6,00 | 75,89 |
| 1234 | | OR | NBR | 70 | | | 69,00 | 6,00 | 76,72 |
| 4498 | | OR | NBR | 70 | | | 70,00 | 6,00 | 77,56 |
| 42129 | | OR | NBR | 70 | | | 72,00 | 6,00 | 78,39 |
| 23165 | 182763 | OR | NBR | 70 | | | 73,00 | 6,00 | 79,14 |
| 1277 | | OR | NBR | 70 | | | 74,00 | 6,00 | 79,97 |
| 5279 | | OR | NBR | 70 | | | 75,00 | 6,00 | 79,97 |
| 1294 | | OR | NBR | 70 | | | 76,00 | 6,00 | 81,63 |
| 1311 | 181937 | OR | NBR | 70 | | | 78,00 | 6,00 | 82,48 |
| 5194 | 182676 | OR | NBR | 70 | | | 78,50 | 6,00 | 83,31 |
| 1316 | | OR | NBR | 70 | | | 79,00 | 6,00 | 84,97 |
| 1329 | 181939 | OR | NBR | 70 | | | 80,00 | 6,00 | 85,80 |
| 1341 | | OR | NBR | 70 | | | 81,00 | 6,00 | 87,46 |
| 42175 | | OR | NBR | 70 | | | 81,50 | 6,00 | 88,22 |

| CODICE | NUOVO CODICE | TIPO | MAT. | SH | RIFERIMENTI USA | RIFERIMENTI UK | d1 mm | d2 mm | LISTINO 5-2016 X 100 € |
|---|---|---|---|---|---|---|---|---|---|
| 1362 | | OR | NBR | 70 | | | 84,00 | 6,00 | 89,88 |
| 4562 | 182597 | OR | NBR | 70 | | | 85,00 | 6,00 | 90,71 |
| 1380 | | OR | NBR | 70 | | | 86,00 | 6,00 | 92,37 |
| 1399 | 181945 | OR | NBR | 70 | | | 88,00 | 6,00 | 94,86 |
| 1420 | | OR | NBR | 70 | | | 90,00 | 6,00 | 95,69 |
| 1435 | 181947 | OR | NBR | 70 | | | 92,00 | 6,00 | 96,46 |
| 1442 | | OR | NBR | 70 | | | 93,00 | 6,00 | 97,29 |
| 4592 | 182601 | OR | NBR | 70 | | | 95,00 | 6,00 | 98,12 |
| 4598 | | OR | NBR | 70 | | | 96,00 | 6,00 | 98,12 |
| 1480 | 181949 | OR | NBR | 70 | | | 98,00 | 6,00 | 98,95 |
| 1486 | | OR | NBR | 70 | | | 99,00 | 6,00 | 99,78 |
| 4611 | 182604 | OR | NBR | 70 | | | 100,00 | 6,00 | 99,78 |
| 1506 | | OR | NBR | 70 | | | 101,00 | 6,00 | 160,07 |
| 4963 | | OR | NBR | 70 | | | 103,00 | 6,00 | 161,37 |
| 1520 | | OR | NBR | 70 | | | 104,00 | 6,00 | 162,68 |
| 1524 | | OR | NBR | 70 | | | 104,50 | 6,00 | 163,98 |
| 1534 | | OR | NBR | 70 | | | 105,00 | 6,00 | 165,29 |
| 42286 | 182885 | OR | NBR | 70 | | | 106,00 | 6,00 | 166,59 |
| 1561 | | OR | NBR | 70 | | | 108,00 | 6,00 | 170,50 |
| 5086 | 182662 | OR | NBR | 70 | | | 110,00 | 6,00 | 173,11 |
| 1577 | | OR | NBR | 70 | | | 111,00 | 6,00 | 174,52 |
| 1582 | | OR | NBR | 70 | | | 112,00 | 6,00 | 175,72 |
| 4641 | | OR | NBR | 70 | | | 114,00 | 6,00 | 178,44 |
| 2764 | 182057 | OR | NBR | 70 | | | 115,00 | 6,00 | 178,44 |
| 1620 | | OR | NBR | 70 | | | 118,00 | 6,00 | 184,96 |
| 4967 | 182642 | OR | NBR | 70 | | | 120,00 | 6,00 | 191,59 |
| 1643 | | OR | NBR | 70 | | | 122,00 | 6,00 | 195,50 |
| 4969 | | OR | NBR | 70 | | | 123,00 | 6,00 | 199,42 |
| 1657 | | OR | NBR | 70 | | | 124,00 | 6,00 | 203,33 |
| 1659 | | OR | NBR | 70 | | | 125,00 | 6,00 | 207,24 |
| 1675 | | OR | NBR | 70 | | | 128,00 | 6,00 | 211,16 |
| 4975 | | OR | NBR | 70 | | | 130,00 | 6,00 | 213,87 |
| 1699 | | OR | NBR | 70 | | | 132,00 | 6,00 | 221,70 |
| 5361 | | OR | NBR | 70 | | | 134,00 | 6,00 | 226,92 |
| 4699 | | OR | NBR | 70 | | | 135,00 | 6,00 | 230,94 |
| 1722 | | OR | NBR | 70 | | | 136,00 | 6,00 | 233,55 |
| 4705 | | OR | NBR | 70 | | | 138,00 | 6,00 | 236,15 |
| 1737 | | OR | NBR | 70 | | | 139,20 | 6,00 | 237,46 |
| 1745 | | OR | NBR | 70 | | | 140,00 | 6,00 | 238,76 |
| 4716 | | OR | NBR | 70 | | | 142,00 | 6,00 | 255,81 |
| 1764 | | OR | NBR | 70 | | | 145,00 | 6,00 | 267,65 |
| 1772 | | OR | NBR | 70 | | | 146,00 | 6,00 | 268,85 |
| 4723 | | OR | NBR | 70 | | | 148,00 | 6,00 | 271,67 |
| 5449 | | OR | NBR | 70 | | | 150,00 | 6,00 | 274,18 |
| 1804 | | OR | NBR | 70 | | | 153,00 | 6,00 | 279,50 |
| 4734 | | OR | NBR | 70 | | | 154,00 | 6,00 | 285,81 |
| 4737 | | OR | NBR | 70 | | | 155,00 | 6,00 | 288,63 |
| 1817 | | OR | NBR | 70 | | | 155,50 | 6,00 | 293,96 |
| 1820 | | OR | NBR | 70 | | | 156,00 | 6,00 | 299,07 |

| CODICE | NUOVO CODICE | TIPO | MAT. | SH | RIFERIMENTI USA | RIFERIMENTI UK | d1 mm | d2 mm | LISTINO 5-2016 X 100 € |
|---|---|---|---|---|---|---|---|---|---|
| 1826 | 181968 | OR | NBR | 70 | | | 157,00 | 6,00 | 304,39 |
| 1831 | | OR | NBR | 70 | | | 158,00 | 6,00 | 309,72 |
| 42497 | 182895 | OR | NBR | 70 | | | 159,00 | 6,00 | 312,22 |
| 4748 | 182622 | OR | NBR | 70 | | | 160,00 | 6,00 | 314,73 |
| 1851 | 181969 | OR | NBR | 70 | | | 162,00 | 6,00 | 330,49 |
| 4757 | | OR | NBR | 70 | | | 165,00 | 6,00 | 334,51 |
| 4987 | | OR | NBR | 70 | | | 166,00 | 6,00 | 338,63 |
| 42681 | | OR | NBR | 70 | | | 169,00 | 6,00 | 350,24 |
| 1884 | 181972 | OR | NBR | 70 | | | 170,00 | 6,00 | 354,26 |
| 4768 | | OR | NBR | 70 | | | 172,00 | 6,00 | 363,40 |
| 5309 | | OR | NBR | 70 | | | 175,00 | 6,00 | 373,83 |
| 4772 | | OR | NBR | 70 | | | 176,00 | 6,00 | 376,55 |
| 4991 | | OR | NBR | 70 | | | 180,00 | 6,00 | 380,36 |
| 1932 | | OR | NBR | 70 | | | 182,00 | 6,00 | 386,98 |
| 1935 | | OR | NBR | 70 | | | 184,00 | 6,00 | 393,61 |
| 1942 | | OR | NBR | 70 | | | 185,00 | 6,00 | 400,14 |
| 1956 | | OR | NBR | 70 | | | 188,00 | 6,00 | 411,77 |
| 4994 | | OR | NBR | 70 | | | 190,00 | 6,00 | 419,70 |
| 88667 | | OR | NBR | 70 | | | 191,20 | 6,00 | 423,72 |
| 1974 | | OR | NBR | 70 | | | 193,00 | 6,00 | 427,74 |
| 1979 | | OR | NBR | 70 | | | 195,00 | 6,00 | 432,83 |
| 1984 | | OR | NBR | 70 | | | 196,00 | 6,00 | 440,66 |
| 5403 | | OR | NBR | 70 | | | 198,00 | 6,00 | 450,13 |
| 4860 | 182630 | OR | NBR | 70 | | | 200,00 | 6,00 | 459,24 |
| BR. STD METRIC BS 4518 - JAPAN STD JIS 240 P+G - SWEDISH STD SMS 1586 | | | | | | | | | |
| 21492 | | OR | NBR | 70 | | | 144,10 | 8,40 | 229,18 |
| 3864 | | OR | NBR | 70 | | | 149,10 | 8,40 | 231,75 |
| 148344 | 183142 | OR | NBR | 70 | | | 149,50 | 8,40 | 236,68 |
| 3865 | | OR | NBR | 70 | | | 154,10 | 8,40 | - |
| 148345 | 183143 | OR | NBR | 70 | | | 154,50 | 8,40 | - |
| 21493 | | OR | NBR | 70 | | | 159,10 | 8,40 | 250,61 |
| 148346 | | OR | NBR | 70 | | | 159,50 | 8,40 | 250,61 |
| 21494 | 183538 | OR | NBR | 70 | | | 164,10 | 8,40 | 252,75 |
| 146041 | 183117 | OR | NBR | 70 | | | 164,50 | 8,40 | 252,75 |
| 3868 | | OR | NBR | 70 | | | 169,10 | 8,40 | 229,98 |
| 146068 | | OR | NBR | 70 | | | 169,50 | 8,40 | 229,98 |
| 3869 | | OR | NBR | 70 | | | 174,10 | 8,40 | 218,86 |
| 146126 | 183121 | OR | NBR | 70 | | | 174,50 | 8,40 | 218,86 |
| 3870 | 182473 | OR | NBR | 70 | | | 179,10 | 8,40 | 218,86 |
| 148347 | 184263 | OR | NBR | 70 | | | 179,50 | 8,40 | 218,86 |
| 21495 | | OR | NBR | 70 | | | 184,10 | 8,40 | 226,78 |
| 148348 | | OR | NBR | 70 | | | 184,50 | 8,40 | 224,11 |
| 3872 | | OR | NBR | 70 | | | 189,10 | 8,40 | 273,56 |
| 148349 | | OR | NBR | 70 | | | 189,50 | 8,40 | 273,56 |
| 3873 | | OR | NBR | 70 | | | 194,10 | 8,40 | 233,63 |
| 77250 | 182948 | OR | NBR | 70 | | | 194,50 | 8,40 | 233,63 |
| 3874 | | OR | NBR | 70 | | | 199,10 | 8,40 | 231,58 |
| 148350 | 184264 | OR | NBR | 70 | | | 199,50 | 8,40 | 231,58 |
| 21496 | 182750 | OR | NBR | 70 | | | 204,10 | 8,40 | 226,33 |

| CODICE | NUOVO CODICE | TIPO | MAT. | SH | RIFERIMENTI USA | RIFERIMENTI UK | d1 mm | d2 mm | LISTINO 5-2016 X 100 € |
|---|---|---|---|---|---|---|---|---|---|
| 146287 | 184216 | OR | NBR | 70 | | | 204,50 | 8,40 | 226,33 |
| 146309 | 183126 | OR | NBR | 70 | | | 208,50 | 8,40 | 268,04 |
| 3876 | | OR | NBR | 70 | | | 209,10 | 8,40 | 328,34 |
| 148351 | 183145 | OR | NBR | 70 | | | 209,50 | 8,40 | 328,34 |
| 77252 | 182949 | OR | NBR | 70 | | | 214,50 | 8,40 | 336,97 |
| 3877 | | OR | NBR | 70 | | | 219,10 | 8,40 | 396,37 |
| 146369 | 183128 | OR | NBR | 70 | | | 219,50 | 8,40 | 396,37 |
| 3878 | | OR | NBR | 70 | | | 229,10 | 8,40 | 277,92 |
| 148352 | 183146 | OR | NBR | 70 | | | 229,50 | 8,40 | 277,92 |
| 3879 | | OR | NBR | 70 | | | 234,10 | 8,40 | 549,87 |
| 75056 | 182941 | OR | NBR | 70 | | | 234,50 | 8,40 | 549,87 |
| 5521 | 182719 | OR | NBR | 70 | | | 239,10 | 8,40 | 252,93 |
| 148353 | 184265 | OR | NBR | 70 | | | 239,50 | 8,40 | 252,93 |
| 146508 | 183130 | OR | NBR | 70 | | | 244,50 | 8,40 | 431,33 |
| 3880 | | OR | NBR | 70 | | | 249,10 | 8,40 | 280,14 |
| 148354 | 183147 | OR | NBR | 70 | | | 249,50 | 8,40 | 280,14 |
| 77381 | 182952 | OR | NBR | 70 | | | 254,50 | 8,40 | - |
| 76584 | 182943 | OR | NBR | 70 | | | 259,50 | 8,40 | 337,95 |
| 148355 | 183148 | OR | NBR | 70 | | | 264,50 | 8,40 | 410,43 |
| 77254 | 183808 | OR | NBR | 70 | | | 269,50 | 8,40 | 427,95 |
| 146655 | 183131 | OR | NBR | 70 | | | 274,50 | 8,40 | 483,62 |
| 146681 | 183132 | OR | NBR | 70 | | | 279,50 | 8,40 | 656,59 |
| 93042 | 182991 | OR | NBR | 70 | | | 284,50 | 8,40 | 392,02 |
| 146721 | 183133 | OR | NBR | 70 | | | 289,50 | 8,40 | 656,59 |
| 146749 | 183134 | OR | NBR | 70 | | | 294,50 | 8,40 | 487,00 |
| 146772 | | OR | NBR | 70 | | | 299,50 | 8,40 | 566,50 |
| 146826 | 183135 | OR | NBR | 70 | | | 314,50 | 8,40 | 539,11 |
| 148356 | | OR | NBR | 70 | | | 319,50 | 8,40 | 835,59 |
| 79485 | 182954 | OR | NBR | 70 | | | 334,50 | 8,40 | 840,62 |
| 148357 | | OR | NBR | 70 | | | 339,50 | 8,40 | 845,69 |
| 76578 | 182942 | OR | NBR | 70 | | | 354,50 | 8,40 | 849,48 |
| 147026 | 183136 | OR | NBR | 70 | | | 359,50 | 8,40 | 853,33 |
| 147075 | 184251 | OR | NBR | 70 | | | 374,50 | 8,40 | 855,02 |
| 77255 | 182951 | OR | NBR | 70 | | | 384,50 | 8,40 | 857,75 |
| 148358 | 183149 | OR | NBR | 70 | | | 399,50 | 8,40 | 883,75 |

Consultate i nostri uffici commerciali
per misure e prezzi non indicati

| TIPO | RIFERIMENTI USA | RIFERIMENTI UK | d1 mm | d2 mm | LISTINO SILICONE 70 SH 5-2016 € X1 00 | LISTINO NBR 90 SH 5-2016 € X 100 | LISTINO EPDM 70 SH 5-2016 € X 100 |
|---|---|---|---|---|---|---|---|
| BRITISH STANDARD BS 1806 - AMERICAN STANDARD AS 568 A | | | | | | | |
| OR | 2-4 | 2007 | 1,78 | 1,78 | 7,62 | 3,65 | 3,86 |
| OR | 2-5 | 2010 | 2,57 | 1,78 | 7,62 | 3,65 | 3,86 |
| OR | 2-6 | 2012 101 | 2,90 | 1,78 | 7,62 | 3,65 | 3,86 |
| OR | 2-7 | 2015 102 | 3,68 | 1,78 | 8,42 | 4,02 | 4,25 |
| OR | 2-8 | 2018 103 | 4,48 | 1,78 | 8,42 | 4,02 | 4,25 |
| OR | 2-9 | 2021 104 | 5,28 | 1,78 | 8,42 | 4,02 | 4,25 |
| OR | 2-10 | 2025 105 | 6,07 | 1,78 | 10,33 | 4,93 | 5,22 |
| OR | 5-052 | 106 | 6,75 | 1,78 | 10,33 | 4,93 | 5,22 |
| OR | 2-11 | 2031 107 | 7,66 | 1,78 | 10,33 | 4,93 | 5,22 |
| OR | 5-612 | 108 | 8,73 | 1,78 | 10,33 | 4,93 | 5,22 |
| OR | 2-12 | 2037 110 | 9,25 | 1,78 | 10,33 | 4,93 | 5,22 |
| OR | 2-13 | 2043 | 10,82 | 1,78 | 11,24 | 5,38 | 5,69 |
| OR | 5-613 | 114 | 11,11 | 1,78 | 11,24 | 5,38 | 5,69 |
| OR | 2-14 | 2050 | 12,42 | 1,78 | 11,24 | 5,38 | 5,69 |
| OR | 2-15 | 2056 | 14,00 | 1,78 | 15,16 | 7,24 | 7,66 |
| OR | 2-16 | 2062 | 15,60 | 1,78 | 15,16 | 7,24 | 7,66 |
| OR | 2-17 | 2068 | 17,16 | 1,78 | 17,88 | 8,68 | 9,18 |
| OR | 2-18 | 2075 | 18,77 | 1,78 | 17,88 | 8,68 | 9,18 |
| OR | 2-19 | 2081 | 20,35 | 1,78 | 21,27 | 10,31 | 10,91 |
| OR | 2-20 | 2087 | 21,95 | 1,78 | 21,27 | 10,31 | 10,91 |
| OR | 2-21 | 2093 | 23,53 | 1,78 | 25,17 | 12,19 | 12,89 |
| OR | 2-22 | 2100 | 25,12 | 1,78 | 29,71 | 14,39 | 15,21 |
| OR | 2-23 | 2106 | 26,70 | 1,78 | 29,71 | 14,39 | 15,21 |
| OR | 2-24 | 2112 | 28,30 | 1,78 | 29,71 | 37,49 | 15,21 |
| OR | 2-25 | 2118 | 29,87 | 1,78 | 29,71 | 14,39 | 15,21 |
| OR | 2-26 | 2125 | 31,47 | 1,78 | 57,53 | 26,83 | 28,38 |
| OR | 2-27 | 2131 | 33,05 | 1,78 | 57,53 | 26,83 | 28,38 |
| OR | 2-28 | 2137 | 34,65 | 1,78 | 57,53 | 26,83 | 28,38 |
| OR | 2-29 | 2150 | 37,82 | 1,78 | 64,31 | 30,00 | 31,73 |
| OR | 2-30 | 2162 | 41,00 | 1,78 | 71,36 | 33,29 | 35,21 |
| OR | 2-31 | 2175 | 44,17 | 1,78 | 71,36 | 33,29 | 35,21 |
| OR | 2-32 | 2187 | 47,37 | 1,78 | 90,52 | 37,88 | 40,07 |
| OR | 2-33 | 2200 | 50,52 | 1,78 | 98,33 | 40,84 | 43,20 |
| OR | 2-34 | 2212 | 53,67 | 1,78 | 98,33 | 40,84 | 43,20 |
| OR | 2-35 | 2225 | 56,87 | 1,78 | 105,62 | 47,00 | 49,72 |
| OR | 2-36 | 2237 | 60,04 | 1,78 | 131,13 | 58,34 | 61,71 |
| OR | 2-37 | 2250 | 63,22 | 1,78 | 131,13 | 58,34 | 61,71 |
| OR | 2-38 | 2262 | 66,40 | 1,78 | 142,13 | 63,24 | 66,89 |
| OR | 2-39 | 2275 | 69,57 | 1,78 | 142,13 | 63,24 | 66,89 |
| OR | 2-40 | 2287 | 72,76 | 1,78 | 156,62 | 69,70 | 73,72 |
| OR | 2-41 | 2300 | 75,92 | 1,78 | 179,48 | 72,92 | 77,13 |
| OR | 2-42 | 2325 | 82,28 | 1,78 | 191,53 | 77,81 | 82,30 |
| OR | 2-43 | 2350 | 88,62 | 1,78 | 203,45 | 92,55 | 97,90 |
| OR | 2-44 | 2375 | 94,97 | 1,78 | 304,17 | 138,36 | 146,35 |
| OR | 2-45 | 2400 | 101,34 | 1,78 | 305,25 | == | 148,11 |
| OR | 2-46 | 2425 | 107,70 | 1,78 | 244,18 | 112,02 | 118,49 |
| OR | 2-47 | 2450 | 114,00 | 1,78 | 324,38 | 148,81 | 157,40 |
| OR | 2-48 | 2475 | 120,40 | 1,78 | 353,04 | 161,96 | 171,31 |

| TIPO | RIFERIMENTI USA | RIFERIMENTI UK | d1 mm | d2 mm | LISTINO SILICONE 70 SH 5-2016 € X 100 | LISTINO NBR 90 SH 5-2016 € X 100 | LISTINO EPDM 70 SH 5-2016 € X 100 |
|---|---|---|---|---|---|---|---|
| OR | 2-49 | 2500 | 126,76 | 1,78 | 353,04 | 161,96 | 171,31 |
| OR | 2-50 | 2525 | 133,07 | 1,78 | 297,57 | 136,51 | 144,39 |
| OR | 2-103 | | 2,06 | 2,62 | 18,62 | 9,05 | 9,57 |
| OR | 2-104 | | 2,84 | 2,62 | 18,62 | 9,05 | 9,57 |
| OR | 2-105 | | 3,63 | 2,62 | 21,51 | 10,43 | 11,04 |
| OR | 2-106 | | 4,42 | 2,62 | 17,19 | 7,99 | 8,46 |
| OR | 2-107 | 3021 | 5,23 | 2,62 | 21,51 | 10,43 | 11,04 |
| OR | 2-108 | 3024 | 6,02 | 2,62 | 17,19 | 7,99 | 8,46 |
| OR | 2-109 | 3030 | 7,60 | 2,62 | 17,88 | 8,68 | 9,18 |
| OR | 2-110 | 109 | 9,13 | 2,62 | 22,34 | 10,85 | 11,47 |
| OR | 2-110 | 3037 111 | 9,19 | 2,62 | 17,88 | 8,68 | 9,18 |
| OR | 5-614 | 112 | 9,92 | 2,62 | 17,88 | 8,68 | 9,18 |
| OR | 2-111 | 3043 113 | 10,78 | 2,62 | 18,85 | 9,16 | 9,68 |
| OR | 5-615 | 115 | 11,91 | 2,62 | 18,85 | 9,16 | 9,68 |
| OR | 2-112 | 3050 116 | 12,37 | 2,62 | 18,85 | 9,16 | 9,68 |
| OR | 5-616 | 117 | 13,10 | 2,62 | 19,80 | 9,61 | 10,17 |
| OR | 2-113 | 3056 118 | 13,95 | 2,62 | 19,80 | 9,61 | 10,17 |
| OR | 5-243 | 119 | 15,08 | 2,62 | 19,80 | 9,61 | 10,17 |
| OR | 2-114 | 3062 120 | 15,54 | 2,62 | 19,80 | 9,61 | 10,17 |
| OR | 5-617 | 121 | 15,88 | 2,62 | 19,80 | 9,61 | 10,17 |
| OR | 2-115 | 3068 122 | 17,13 | 2,62 | 21,38 | 10,38 | 10,98 |
| OR | 5-256 | 123 | 17,86 | 2,62 | 21,38 | 10,38 | 10,98 |
| OR | 2-116 | 3075 124 | 18,72 | 2,62 | 21,38 | 10,38 | 10,98 |
| OR | 2-117 | 3081 127 | 20,29 | 2,62 | 23,03 | 11,14 | 11,78 |
| OR | | 128 | 20,63 | 2,62 | 28,78 | 13,95 | 14,75 |
| OR | 2-118 | 3087 | 21,89 | 2,62 | 23,03 | 11,14 | 11,78 |
| OR | | 130 | 22,22 | 2,62 | 35,89 | 17,89 | 18,93 |
| OR | 2-119 | 3093 | 23,47 | 2,62 | 28,73 | 13,90 | 14,71 |
| OR | | 132 | 23,81 | 2,62 | 35,89 | 17,89 | 18,93 |
| OR | 2-120 | 3100 | 25,07 | 2,62 | 45,87 | 21,39 | 22,63 |
| OR | 2-121 | 3106 | 26,64 | 2,62 | 45,87 | 21,39 | 22,63 |
| OR | 2-122 | 3112 | 28,25 | 2,62 | 45,87 | 21,39 | 22,63 |
| OR | 2-123 | 3118 | 29,82 | 2,62 | 45,87 | 21,39 | 22,63 |
| OR | 2-124 | 3125 | 31,42 | 2,62 | 60,91 | 28,41 | 30,05 |
| OR | 2-125 | 3131 | 33,00 | 2,62 | 60,91 | 28,41 | 30,05 |
| OR | 2-126 | 3137 | 34,59 | 2,62 | 60,91 | 28,41 | 30,05 |
| OR | 2-127 | 3143 | 36,17 | 2,62 | 67,70 | 31,58 | 33,41 |
| OR | 2-128 | 3150 | 37,77 | 2,62 | 67,70 | 31,58 | 33,41 |
| OR | 2-129 | 3156 | 39,34 | 2,62 | 67,70 | 31,58 | 33,41 |
| OR | 2-130 | 3162 | 40,95 | 2,62 | 73,84 | 34,45 | 36,44 |
| OR | 2-131 | 3168 | 42,52 | 2,62 | 73,84 | 34,45 | 36,44 |
| OR | 2-132 | 3175 | 44,12 | 2,62 | 73,84 | 34,45 | 36,44 |
| OR | 2-133 | 3181 | 45,69 | 2,62 | 98,01 | 41,02 | 43,37 |
| OR | 2-134 | 3187 | 47,29 | 2,62 | 98,01 | 41,02 | 43,37 |
| OR | 2-135 | 3193 | 48,90 | 2,62 | 98,01 | 41,02 | 43,37 |
| OR | 2-136 | 3200 | 50,47 | 2,62 | 105,62 | 47,00 | 49,72 |
| OR | 2-137 | 3206 | 52,07 | 2,62 | 105,62 | 47,00 | 49,72 |
| OR | 2-138 | 3212 | 53,65 | 2,62 | 105,62 | 47,00 | 49,72 |
| OR | 2-139 | 3218 | 55,25 | 2,62 | 112,92 | 50,26 | 53,16 |

| TIPO | RIFERIMENTI USA | RIFERIMENTI UK | d1 mm | d2 mm | LISTINO SILICONE 70 SH 5-2016 € X1 00 | LISTINO NBR 90 SH 5-2016 € X 100 | LISTINO EPDM 70 SH 5-2016 € X 100 |
|---|---|---|---|---|---|---|---|
| OR | 2-140 | 3225 | 56,82 | 2,62 | 112,92 | 50,26 | 53,16 |
| OR | 2-141 | 3231 | 58,42 | 2,62 | 112,92 | 50,26 | 53,16 |
| OR | 2-142 | 3237 | 60,00 | 2,62 | 112,92 | 50,26 | 53,16 |
| OR | 2-143 | 3243 | 61,60 | 2,62 | 134,78 | 59,98 | 63,43 |
| OR | 2-144 | 3250 | 63,17 | 2,62 | 184,52 | 74,95 | 79,28 |
| OR | 2-145 | 3256 | 64,77 | 2,62 | 134,78 | 59,98 | 63,43 |
| OR | 2-146 | 3262 | 66,35 | 2,62 | 149,37 | 66,45 | 70,29 |
| OR | 2-147 | 3268 | 67,95 | 2,62 | 149,37 | 66,45 | 70,29 |
| OR | 2-148 | 3275 | 69,52 | 2,62 | 149,37 | 66,45 | 70,29 |
| OR | 2-149 | 3281 | 71,12 | 2,62 | 179,48 | 72,92 | 77,13 |
| OR | 2-150 | 3287 | 72,69 | 2,62 | 179,48 | 72,92 | 77,13 |
| OR | 2-151 | 3300 | 75,87 | 2,62 | 191,53 | 77,81 | 82,30 |
| OR | 2-152 | 3325 | 82,22 | 2,62 | 209,06 | 95,11 | 100,59 |
| OR | 2-153 | 3350 | 88,57 | 2,62 | 215,43 | 97,99 | 103,65 |
| OR | 2-154 | 3375 | 94,93 | 2,62 | 243,33 | 110,69 | 117,08 |
| OR | 2-155 | 3400 | 101,27 | 2,62 | 244,18 | 112,02 | 118,49 |
| OR | 2-156 | 3425 | 107,63 | 2,62 | 244,18 | 112,02 | 118,49 |
| OR | 2-157 | 3450 | 113,98 | 2,62 | 259,50 | 119,06 | 125,93 |
| OR | 2-158 | 3475 | 120,33 | 2,62 | 282,45 | 129,57 | 137,05 |
| OR | 2-159 | 3500 | 126,67 | 2,62 | 282,45 | 129,57 | 137,05 |
| OR | 2-160 | 3525 | 133,00 | 2,62 | 297,65 | 136,54 | 144,41 |
| OR | 2-161 | 3550 | 139,38 | 2,62 | 297,65 | 136,54 | 144,41 |
| OR | 2-162 | 3575 | 145,72 | 2,62 | 320,62 | 147,08 | 155,57 |
| OR | 2-163 | 3600 | 152,07 | 2,62 | 476,10 | 205,70 | 217,57 |
| OR | 2-164 | 3625 | 158,41 | 2,62 | 476,10 | 205,70 | 217,57 |
| OR | 2-165 | 3650 | 164,78 | 2,62 | 569,64 | 246,10 | 260,31 |
| OR | 2-166 | 3675 | 171,13 | 2,62 | 929,26 | 385,74 | 408,00 |
| OR | 2-167 | 3700 | 177,47 | 2,62 | 929,26 | 385,74 | 408,00 |
| OR | 2-168 | 3725 | 183,83 | 2,62 | 761,02 | 328,80 | 347,78 |
| OR | 2-169 | 3750 | 190,18 | 2,62 | 761,02 | 328,80 | 347,78 |
| OR | 2-170 | 3775 | 196,53 | 2,62 | 880,54 | 365,52 | 386,61 |
| OR | 2-171 | 3800 | 202,87 | 2,62 | 939,09 | 399,15 | 422,18 |
| OR | 2-172 | 3825 | 209,23 | 2,62 | 1.173,84 | 572,94 | 605,98 |
| OR | 2-173 | 3850 | 215,58 | 2,62 | 1.271,73 | 620,70 | 656,51 |
| OR | 2-174 | 3875 | 221,93 | 2,62 | 1.421,03 | 693,57 | 733,59 |
| OR | 2-175 | 3900 | 228,28 | 2,62 | 1.421,03 | 693,57 | 733,59 |
| OR | 2-176 | 3925 | 234,63 | 2,62 | 1.508,59 | 736,31 | 778,79 |
| OR | 2-177 | 3950 | 240,98 | 2,62 | 1.508,59 | 736,31 | 778,79 |
| OR | 2-178 | 3975 | 247,33 | 2,62 | 2.048,94 | 791,56 | 837,22 |
| OR | 2-201 | | 4,34 | 3,53 | 25,14 | 12,22 | 12,92 |
| OR | 2-202 | | 5,94 | 3,53 | 25,14 | 12,22 | 12,92 |
| OR | 2-203 | 4028 | 7,52 | 3,53 | 22,19 | 10,77 | 11,38 |
| OR | 2-204 | 4036 | 9,12 | 3,53 | 22,19 | 10,77 | 11,38 |
| OR | 2-205 | 4042 | 10,69 | 3,53 | 32,55 | 15,81 | 16,72 |
| OR | 2-206 | 4050 | 12,29 | 3,53 | 32,55 | 15,81 | 16,72 |
| OR | 2-207 | 4055 | 13,87 | 3,53 | 28,64 | 13,90 | 14,71 |
| OR | 2-208 | 4061 | 15,47 | 3,53 | 35,82 | 17,85 | 18,89 |
| OR | 2-209 | 4067 | 17,04 | 3,53 | 53,33 | 24,91 | 26,35 |
| OR | 2-210 | 4075 125 | 18,64 | 3,53 | 42,66 | 19,94 | 21,09 |

| TIPO | RIFERIMENTI USA | RIFERIMENTI UK | d1 mm | d2 mm | LISTINO SILICONE 70 SH 5-2016 € X 100 | LISTINO NBR 90 SH 5-2016 € X 100 | LISTINO EPDM 70 SH 5-2016 € X 100 |
|---|---|---|---|---|---|---|---|
| OR | 2-211 | 4081 126 | 20,22 | 3,53 | 47,36 | 22,08 | 23,36 |
| OR | 2-212 | 4087 129 | 21,82 | 3,53 | 47,36 | 22,08 | 23,36 |
| OR | 2-213 | 4093 131 | 23,40 | 3,53 | 50,62 | 23,61 | 24,97 |
| OR | 2-214 | 4100 133 | 24,99 | 3,53 | 50,62 | 23,61 | 24,97 |
| OR | 5-618 | 134 | 25,80 | 3,53 | 89,57 | 37,49 | 39,65 |
| OR | 2-215 | 4106 135 | 26,58 | 3,53 | 64,31 | 30,00 | 31,73 |
| OR | 2-216 | 4112 136 | 28,17 | 3,53 | 64,31 | 30,00 | 31,73 |
| OR | 2-217 | 4118 137 | 29,75 | 3,53 | 64,31 | 30,00 | 31,73 |
| OR | 2-218 | 4125 138 | 31,34 | 3,53 | 74,42 | 34,72 | 36,72 |
| OR | 2-219 | 4131 139 | 32,92 | 3,53 | 74,42 | 34,72 | 36,72 |
| OR | 2-220 | 4137 140 | 34,52 | 3,53 | 74,42 | 34,72 | 36,72 |
| OR | 2-221 | 4143 141 | 36,10 | 3,53 | 98,01 | 41,02 | 43,37 |
| OR | 2-222 | 4150 142 | 37,69 | 3,53 | 98,01 | 41,02 | 43,37 |
| OR | 5-321 | 144 | 39,69 | 3,53 | 98,01 | 41,02 | 43,37 |
| OR | 2-223 | 4162 | 40,87 | 3,53 | 101,83 | 45,54 | 48,17 |
| OR | 2-223 | 146 | 41,28 | 3,53 | 101,83 | 45,54 | 48,17 |
| OR | 5-332 | 147 | 42,86 | 3,53 | 101,83 | 45,54 | 48,17 |
| OR | 2-224 | 4175 | 44,04 | 3,53 | 101,83 | 45,54 | 48,17 |
| OR | | 149 | 44,45 | 3,53 | 127,32 | 56,92 | 60,20 |
| OR | 5-035 | 150 | 46,04 | 3,53 | 146,18 | 65,37 | 69,13 |
| OR | 2-225 | 4187 | 47,22 | 3,53 | 116,94 | 52,28 | 55,30 |
| OR | | 152 | 47,63 | 3,53 | 116,94 | 52,28 | 55,30 |
| OR | 5-701 | 153 | 49,21 | 3,53 | 116,94 | 52,28 | 55,30 |
| OR | 2-226 | 4200 | 50,40 | 3,53 | 123,86 | 55,11 | 58,29 |
| OR | | 155 | 50,80 | 3,53 | 123,86 | 55,11 | 58,29 |
| OR | 5-037 | 156 | 52,39 | 3,53 | 123,86 | 55,11 | 58,29 |
| OR | 2-227 | 4212 | 53,57 | 3,53 | 123,86 | 55,11 | 58,29 |
| OR | | 158 | 53,98 | 3,53 | 154,81 | 68,88 | 72,86 |
| OR | | 159 | 55,56 | 3,53 | 189,53 | 77,01 | 81,45 |
| OR | 2-228 | 4225 | 56,74 | 3,53 | 138,43 | 61,60 | 65,16 |
| OR | | 161 | 57,15 | 3,53 | 189,53 | 77,01 | 81,45 |
| OR | 5-702 | 162 | 58,74 | 3,53 | 138,43 | 61,60 | 65,16 |
| OR | 2-229 | 4237 | 59,92 | 3,53 | 138,43 | 61,60 | 65,16 |
| OR | | 164 | 60,33 | 3,53 | 219,44 | 99,81 | 105,58 |
| OR | 5-039 | 165 | 61,90 | 3,53 | 219,44 | 99,81 | 105,58 |
| OR | 2-230 | 4250 | 63,09 | 3,53 | 175,55 | 71,32 | 75,44 |
| OR | | 167 | 63,50 | 3,53 | 219,44 | 99,81 | 105,58 |
| OR | 5-703 | 168 | 65,10 | 3,53 | 213,47 | 97,11 | 102,71 |
| OR | 2-231 | 4262 | 66,27 | 3,53 | 213,47 | 97,11 | 102,71 |
| OR | | 170 | 66,67 | 3,53 | 266,81 | 121,38 | 128,38 |
| OR | 5-361 | 171 | 68,26 | 3,53 | 213,47 | 97,11 | 102,71 |
| OR | 2-232 | 4275 | 69,44 | 3,53 | 213,47 | 97,11 | 102,71 |
| OR | | 173 | 69,85 | 3,53 | 266,81 | 121,38 | 128,38 |
| OR | 5-704 | 174 | 71,44 | 3,53 | 279,26 | 127,03 | 134,37 |
| OR | 2-233 | 4287 | 72,62 | 3,53 | 223,44 | 101,64 | 107,50 |
| OR | | 176 | 73,02 | 3,53 | 279,26 | 127,03 | 134,37 |
| OR | 5-705 | 177 | 74,60 | 3,53 | 279,26 | 127,03 | 134,37 |
| OR | 2-234 | 4300 | 75,80 | 3,53 | 235,39 | 107,08 | 113,27 |
| OR | 2-235 | 4312 | 78,97 | 3,53 | 235,39 | 107,08 | 113,27 |

| TIPO | RIFERIMENTI USA | RIFERIMENTI UK | d1 mm | d2 mm | LISTINO SILICONE 70 SH 5-2016 € X1 00 | LISTINO NBR 90 SH 5-2016 € X 100 | LISTINO EPDM 70 SH 5-2016 € X 100 |
|---|---|---|---|---|---|---|---|
| OR | 2-236 | 4325 | 82,14 | 3,53 | 239,36 | 108,88 | 115,16 |
| OR | 2-237 | 4337 | 85,32 | 3,53 | 247,37 | 112,53 | 119,03 |
| OR | 2-238 | 4350 | 88,50 | 3,53 | 247,37 | 112,53 | 119,03 |
| OR | 2-239 | 4362 | 91,67 | 3,53 | 295,29 | 134,33 | 142,08 |
| OR | 2-240 | 4375 | 94,84 | 3,53 | 295,29 | 134,33 | 142,08 |
| OR | 2-241 | 4387 | 98,02 | 3,53 | 295,29 | 134,33 | 142,08 |
| OR | 2-242 | 4400 | 101,20 | 3,53 | 308,48 | 141,52 | 149,67 |
| OR | 2-243 | 4412 | 104,37 | 3,53 | 308,48 | 141,52 | 149,67 |
| OR | 2-244 | 4425 | 107,54 | 3,53 | 308,48 | 141,52 | 149,67 |
| OR | 2-245 | 4437 | 110,72 | 3,53 | 320,62 | 147,08 | 155,57 |
| OR | 2-246 | 4450 | 113,90 | 3,53 | 320,62 | 147,08 | 155,57 |
| OR | 2-247 | 4462 | 117,07 | 3,53 | 320,62 | 147,08 | 155,57 |
| OR | 2-248 | 4475 | 120,25 | 3,53 | 331,98 | 152,31 | 161,10 |
| OR | 2-249 | 4487 | 123,42 | 3,53 | 331,98 | 152,31 | 161,10 |
| OR | 2-250 | 4500 | 126,60 | 3,53 | 331,98 | 152,31 | 161,10 |
| OR | 2-251 | 4512 | 129,77 | 3,53 | 331,98 | 152,31 | 161,10 |
| OR | 2-252 | 4525 | 132,94 | 3,53 | 339,64 | 155,82 | 164,81 |
| OR | 2-253 | 4537 | 136,12 | 3,53 | 339,64 | 155,82 | 164,81 |
| OR | 2-254 | 4550 | 139,30 | 3,53 | 339,64 | 155,82 | 164,81 |
| OR | 2-255 | 4562 | 142,47 | 3,53 | 358,71 | 164,57 | 174,06 |
| OR | 2-256 | 4575 | 145,65 | 3,53 | 358,71 | 164,57 | 174,06 |
| OR | 2-257 | 4587 | 148,82 | 3,53 | 358,71 | 164,57 | 174,06 |
| OR | 2-258 | 4600 | 151,99 | 3,53 | 531,46 | 229,61 | 242,87 |
| OR | 2-259 | 4625 | 158,35 | 3,53 | 531,46 | 229,61 | 242,87 |
| OR | 2-260 | 4650 | 164,70 | 3,53 | 607,93 | 262,66 | 277,81 |
| OR | 2-261 | 4675 | 171,05 | 3,53 | 731,25 | 315,94 | 334,17 |
| OR | 2-262 | 4700 | 177,40 | 3,53 | 731,25 | 315,94 | 334,17 |
| OR | 2-263 | 4725 | 183,75 | 3,53 | 880,54 | 365,52 | 386,61 |
| OR | 2-264 | 4750 | 190,10 | 3,53 | 929,26 | 385,74 | 408,00 |
| OR | 2-265 | 4775 | 196,44 | 3,53 | 929,26 | 385,74 | 408,00 |
| OR | 2-266 | 4800 | 202,79 | 3,53 | 1.004,97 | 490,50 | 518,80 |
| OR | 2-267 | 4825 | 209,14 | 3,53 | 1.004,97 | 490,50 | 518,80 |
| OR | 2-268 | 4850 | 215,49 | 3,53 | 1.149,12 | 560,86 | 593,21 |
| OR | 2-269 | 4875 | 221,84 | 3,53 | 1.158,91 | 565,63 | 598,27 |
| OR | 2-270 | 4900 | 228,19 | 3,53 | 1.448,62 | 707,04 | 747,83 |
| OR | 2-271 | 4925 | 234,54 | 3,53 | 1.231,50 | 601,07 | 635,75 |
| OR | 2-272 | 4950 | 240,89 | 3,53 | 1.301,55 | 635,27 | 671,92 |
| OR | 2-273 | 4975 | 247,24 | 3,53 | 2.055,47 | 794,08 | 839,89 |
| OR | 2-274 | 41000 | 253,59 | 3,53 | 1.346,88 | 657,39 | 695,31 |
| OR | 2-275 | 41050 | 266,30 | 3,53 | 2.159,53 | 851,86 | 901,00 |
| OR | 2-276 | 41100 | 279,00 | 3,53 | 2.270,16 | 895,50 | 947,16 |
| OR | 2-277 | 41150 | 291,70 | 3,53 | 1.577,52 | 769,96 | 814,37 |
| OR | 2-278 | 41200 | 304,39 | 3,53 | 1.534,40 | 747,62 | 790,75 |
| OR | 2-279 | 41300 | 329,80 | 3,53 | 1.999,27 | 797,07 | 843,05 |
| OR | 2-280 | 41400 | 355,20 | 3,53 | 2.737,83 | 1.116,61 | 1.181,03 |
| OR | 2-281 | 41500 | 380,60 | 3,53 | 3.125,43 | 1.274,67 | 1.348,21 |
| OR | 2-282 | 41600 | 405,26 | 3,53 | 2.596,63 | 1.099,84 | 1.163,30 |
| OR | 2-283 | 41700 | 430,66 | 3,53 | 3.631,77 | 1.538,28 | 1.627,02 |
| OR | 2-284 | 41800 | 456,06 | 3,53 | 3.631,77 | 1.538,28 | 1.627,02 |

| TIPO | RIFERIMENTI USA | RIFERIMENTI UK | d1 mm | d2 mm | LISTINO SILICONE 70 SH 5-2016 € X 100 | LISTINO NBR 90 SH 5-2016 € X 100 | LISTINO EPDM 70 SH 5-2016 € X 100 |
|---|---|---|---|---|---|---|---|
| OR | 2-309 | | 10,46 | 5,33 | 74,91 | 35,00 | 37,02 |
| OR | 2-310 | 6050 | 12,07 | 5,33 | 94,24 | 39,13 | 41,39 |
| OR | 2-311 | 6055 | 13,64 | 5,33 | 94,24 | 39,13 | 41,39 |
| OR | 2-312 | 6060 | 15,24 | 5,33 | 94,24 | 39,13 | 41,39 |
| OR | 2-313 | 6065 | 16,81 | 5,33 | 104,74 | 46,38 | 49,06 |
| OR | 2-315 | 6080 | 19,99 | 5,33 | 104,74 | 46,38 | 49,06 |
| OR | 2-316 | 6085 | 21,59 | 5,33 | 111,29 | 49,76 | 52,63 |
| OR | 2-317 | 6095 | 23,17 | 5,33 | 124,39 | 55,62 | 58,82 |
| OR | 2-318 | 6100 | 24,77 | 5,33 | 99,52 | 44,49 | 47,06 |
| OR | 2-319 | 6105 | 26,34 | 5,33 | 155,57 | 69,56 | 73,57 |
| OR | 2-320 | 6110 | 27,93 | 5,33 | 124,47 | 55,66 | 58,87 |
| OR | 2-321 | 6115 | 29,51 | 5,33 | 155,57 | 69,56 | 73,57 |
| OR | 2-323 | 6130 | 32,69 | 5,33 | 187,32 | 75,88 | 80,26 |
| OR | 2-324 | 6135 | 34,29 | 5,33 | 135,79 | 60,71 | 64,22 |
| OR | 2-325 | 6150 143 | 37,47 | 5,33 | 135,79 | 60,71 | 64,22 |
| OR | 2-326 | 6162 145 | 40,65 | 5,33 | 147,17 | 65,80 | 69,60 |
| OR | 2-327 | 6175 148 | 43,82 | 5,33 | 147,17 | 65,80 | 69,60 |
| OR | 2-328 | 6187 151 | 47,00 | 5,33 | 187,30 | 75,87 | 80,25 |
| OR | 2-329 | 6200 154 | 50,16 | 5,33 | 195,50 | 79,42 | 84,00 |
| OR | 2-330 | 6212 157 | 53,34 | 5,33 | 195,50 | 79,42 | 84,00 |
| OR | 2-331 | 6225 160 | 56,52 | 5,33 | 235,65 | 107,20 | 113,38 |
| OR | 2-332 | 6237 163 | 59,70 | 5,33 | 235,65 | 107,20 | 113,38 |
| OR | 2-333 | 6250 166 | 62,87 | 5,33 | 271,31 | 123,41 | 130,54 |
| OR | 2-334 | 6262 169 | 66,04 | 5,33 | 279,30 | 63,24 | 66,89 |
| OR | 2-335 | 6275 172 | 69,22 | 5,33 | 279,30 | 127,06 | 134,40 |
| OR | 2-336 | 6287 175 | 72,40 | 5,33 | 295,29 | 134,33 | 142,08 |
| OR | | 178 | 74,63 | 5,33 | 369,08 | 183,97 | 194,58 |
| OR | 2-337 | 6300 179 | 75,57 | 5,33 | 315,18 | 143,38 | 151,65 |
| OR | 2-338 | 6312 180 | 78,74 | 5,33 | 393,98 | 196,37 | 207,71 |
| OR | | 181 | 79,77 | 5,33 | 315,18 | 143,38 | 151,65 |
| OR | 2-339 | 6325 182 | 81,92 | 5,33 | 331,14 | 150,65 | 159,34 |
| OR | 2-340 | 6337 183 | 85,09 | 5,33 | 364,14 | 181,49 | 191,95 |
| OR | 2-341 | 6350 184 | 88,27 | 5,33 | 364,14 | 181,49 | 191,95 |
| OR | | 185 | 89,69 | 5,33 | 534,30 | 226,86 | 239,94 |
| OR | 3-342 | 6362 186 | 91,44 | 5,33 | 482,37 | 204,80 | 216,63 |
| OR | 2-343 | 6375 187 | 94,62 | 5,33 | 482,37 | 204,80 | 216,63 |
| OR | 2-344 | 6387 188 | 97,80 | 5,33 | 482,37 | 204,80 | 216,63 |
| OR | | 189 | 100,00 | 5,33 | 603,01 | 256,03 | 270,79 |
| OR | 2-345 | 6400 190 | 100,97 | 5,33 | 486,81 | 207,37 | 219,34 |
| OR | 2-346 | 6412 191 | 104,14 | 5,33 | 486,81 | 207,37 | 219,34 |
| OR | 2-347 | 6425 192 | 107,32 | 5,33 | 486,81 | 207,37 | 219,34 |
| OR | | 193 | 109,54 | 5,33 | 608,49 | 259,22 | 274,17 |
| OR | 2-348 | 6437 194 | 110,49 | 5,33 | 540,40 | 230,20 | 243,48 |
| OR | 2-349 | 6450 195 | 113,67 | 5,33 | 540,40 | 230,20 | 243,48 |
| OR | 2-350 | | 116,84 | 5,33 | 675,48 | 287,75 | 304,35 |
| OR | | 199 | 117,48 | 5,33 | 675,48 | 287,75 | 304,35 |
| OR | 2-351 | | 120,02 | 5,33 | 562,72 | 239,71 | 253,53 |
| OR | | 201 | 120,70 | 5,33 | 703,40 | 299,63 | 316,92 |
| OR | 2-352 | | 123,20 | 5,33 | 703,40 | 299,63 | 316,92 |

| TIPO | RIFERIMENTI USA | RIFERIMENTI UK | d1 mm | d2 mm | LISTINO SILICONE 70 SH 5-2016 € X1 00 | LISTINO NBR 90 SH 5-2016 € X 100 | LISTINO EPDM 70 SH 5-2016 € X 100 |
|---|---|---|---|---|---|---|---|
| OR | | 203 | 123,80 | 5,33 | 562,72 | 239,71 | 253,53 |
| OR | 2-353 | | 126,37 | 5,33 | 703,40 | 299,63 | 316,92 |
| OR | | 206 | 127,00 | 5,33 | 703,40 | 299,63 | 316,92 |
| OR | 2-354 | | 129,54 | 5,33 | 703,40 | 299,63 | 316,92 |
| OR | | 208 | 130,18 | 5,33 | 607,36 | 258,73 | 273,67 |
| OR | 2-355 | | 132,72 | 5,33 | 607,36 | 258,73 | 273,67 |
| OR | | 210 | 133,35 | 5,33 | 759,22 | 323,42 | 342,08 |
| OR | 2-356 | | 135,90 | 5,33 | 759,22 | 323,42 | 342,08 |
| OR | | 213 | 136,53 | 5,33 | 759,22 | 323,42 | 342,08 |
| OR | 2-357 | | 139,07 | 5,33 | 607,36 | 258,73 | 273,67 |
| OR | | 215 | 139,70 | 5,33 | 759,22 | 323,42 | 342,08 |
| OR | 2-358 | | 142,24 | 5,33 | 635,51 | 270,72 | 286,34 |
| OR | | 217 | 142,88 | 5,33 | 833,11 | 338,40 | 357,92 |
| OR | 2-359 | | 145,42 | 5,33 | 833,11 | 338,40 | 357,92 |
| OR | | 219 | 146,05 | 5,33 | 833,11 | 338,40 | 357,92 |
| OR | 2-360 | | 148,60 | 5,33 | 833,11 | 338,40 | 357,92 |
| OR | | 221 | 149,23 | 5,33 | 833,11 | 338,40 | 357,92 |
| OR | 2-361 | 6600 | 151,77 | 5,33 | 739,70 | 319,58 | 338,03 |
| OR | 2-362 | 6625 | 158,12 | 5,33 | 962,32 | 399,47 | 422,52 |
| OR | 2-363 | 6645 | 164,47 | 5,33 | 1.133,90 | 542,84 | 574,15 |
| OR | 2-364 | 6670 | 170,82 | 5,33 | 1.057,50 | 506,27 | 535,47 |
| OR | 2-365 | 6700 | 177,17 | 5,33 | 1.321,86 | 632,83 | 669,34 |
| OR | 2-366 | 6720 | 183,52 | 5,33 | 1.509,95 | 722,86 | 764,57 |
| OR | 2-367 | 6745 | 189,87 | 5,33 | 1.207,96 | 578,29 | 611,66 |
| OR | 2-368 | 6775 | 196,22 | 5,33 | 1.283,16 | 614,29 | 649,73 |
| OR | 2-369 | 6795 | 202,57 | 5,33 | 1.280,97 | 625,22 | 661,28 |
| OR | 2-370 | 6820 | 208,92 | 5,33 | 2.023,00 | 781,53 | 826,62 |
| OR | 2-371 | 6850 | 215,27 | 5,33 | 1.356,85 | 662,26 | 700,46 |
| OR | 2-372 | 6870 | 221,62 | 5,33 | 2.238,37 | 882,95 | 933,89 |
| OR | 2-373 | 6895 | 227,97 | 5,33 | 2.238,37 | 882,95 | 933,89 |
| OR | 2-374 | 6920 | 234,32 | 5,33 | 2.354,74 | 928,86 | 982,45 |
| OR | 2-375 | 6945 | 240,67 | 5,33 | 2.354,74 | 928,86 | 982,45 |
| OR | 2-376 | 6975 | 247,02 | 5,33 | 2.413,26 | 951,95 | 1.006,87 |
| OR | 2-377 | 6995 | 253,57 | 5,33 | 2.471,80 | 975,04 | 1.031,29 |
| OR | 2-378 | 61050 | 266,07 | 5,33 | 2.517,41 | 993,02 | 1.050,32 |
| OR | 2-379 | 61100 | 278,77 | 5,33 | 2.065,91 | 798,10 | 844,14 |
| OR | 2-380 | 61150 | 291,47 | 5,33 | 2.168,24 | 855,29 | 904,64 |
| OR | 2-381 | 61200 | 304,17 | 5,33 | 2.660,18 | 1.084,94 | 1.147,53 |
| OR | 2-382 | 61300 | 329,57 | 5,33 | 2.404,92 | 980,82 | 1.037,41 |
| OR | 2-383 | 61400 | 354,97 | 5,33 | 3.573,23 | 1.457,33 | 1.541,40 |
| OR | 2-384 | 61500 | 380,37 | 5,33 | 3.191,30 | 1.301,55 | 1.376,64 |
| OR | 2-385 | 61600 | 405,26 | 5,33 | 2.979,15 | 1.261,86 | 1.334,66 |
| OR | 2-386 | 61700 | 430,66 | 5,33 | 3.631,77 | 1.630,13 | 1.724,18 |
| OR | 2-387 | 61800 | 456,06 | 5,33 | 4.603,59 | 2.025,64 | 2.142,51 |
| OR | 2-388 | 61900 | 481,46 | 5,33 | 5.698,62 | 2.507,46 | 2.652,12 |
| OR | 2-389 | 62000 | 506,81 | 5,33 | == | 4.030,66 | 4.263,20 |
| OR | 2-390 | 62100 | 532,20 | 5,33 | == | 4.868,86 | 5.149,75 |
| OR | 2-391 | 62200 | 557,61 | 5,33 | == | 5.066,19 | 5.358,48 |
| OR | 2-392 | 62300 | 582,68 | 5,33 | == | 5.336,26 | 5.644,12 |

| TIPO | RIFERIMENTI USA | RIFERIMENTI UK | | d1 mm | d2 mm | LISTINO SILICONE 70 SH 5-2016 € X 100 | LISTINO NBR 90 SH 5-2016 € X 100 | LISTINO EPDM 70 SH 5-2016 € X 100 |
|---|---|---|---|---|---|---|---|---|
| OR | 2-425 | 8450 | 196 | 113,67 | 6,99 | 629,69 | 268,24 | 283,71 |
| OR | | 197 | | 114,70 | 6,99 | 787,13 | 335,31 | 354,66 |
| OR | 2-426 | 8462 | 198 | 116,84 | 6,99 | 675,48 | 335,31 | 354,66 |
| OR | 2-427 | 8475 | 200 | 120,02 | 6,99 | 629,69 | 268,24 | 283,71 |
| OR | 2-428 | 8487 | 202 | 123,20 | 6,99 | 883,98 | 359,07 | 379,79 |
| OR | | 204 | | 124,60 | 6,99 | 674,32 | 287,26 | 303,82 |
| OR | 2-429 | 8500 | 205 | 126,37 | 6,99 | 674,32 | 287,26 | 303,82 |
| OR | 2-430 | 8512 | 207 | 129,54 | 6,99 | 883,98 | 359,07 | 379,79 |
| OR | 2-431 | 8525 | 209 | 132,72 | 6,99 | 936,61 | 380,46 | 402,40 |
| OR | | 211 | | 134,50 | 6,99 | 936,61 | 380,46 | 402,40 |
| OR | 2-432 | 8537 | 212 | 135,90 | 6,99 | 759,22 | 304,35 | 321,91 |
| OR | 2-433 | 8550 | 214 | 139,07 | 6,99 | 607,36 | 380,46 | 402,40 |
| OR | 2-434 | 8562 | 216 | 142,24 | 6,99 | 635,51 | 404,26 | 427,58 |
| OR | 2-435 | 8575 | 218 | 145,42 | 6,99 | 759,18 | 323,41 | 342,05 |
| OR | 2-436 | 8587 | 220 | 148,60 | 6,99 | 833,11 | 323,41 | 342,05 |
| OR | 2-437 | 8600 | 222 | 151,77 | 6,99 | 929,26 | 385,74 | 408,00 |
| OR | | 223 | | 155,60 | 6,99 | 1.161,56 | 556,09 | 588,17 |
| OR | 2-438 | 8625 | 224 | 158,12 | 6,99 | 929,26 | 385,74 | 408,00 |
| OR | | 225 | | 159,50 | 6,99 | 929,26 | 385,74 | 408,00 |
| OR | | 226 | | 161,90 | 6,99 | 1.349,52 | 646,06 | 683,33 |
| OR | 2-439 | 8650 | 227 | 164,47 | 6,99 | 1.079,61 | 516,84 | 546,66 |
| OR | | 228 | | 166,70 | 6,99 | 1.349,52 | 646,06 | 683,33 |
| OR | | 229 | | 168,30 | 6,99 | 1.349,52 | 646,06 | 683,33 |
| OR | 2-440 | 8675 | 230 | 170,82 | 6,99 | 1.079,61 | 516,84 | 546,66 |
| OR | | 231 | | 174,60 | 6,99 | 2.156,90 | 810,24 | 856,99 |
| OR | 2-441 | 8700 | 232 | 177,17 | 6,99 | 1.353,97 | 648,18 | 685,57 |
| OR | | 233 | | 181,00 | 6,99 | 2.488,20 | 972,70 | 1.028,81 |
| OR | 2-442 | 8725 | 234 | 183,52 | 6,99 | 1.561,95 | 747,75 | 790,90 |
| OR | | 235 | | 187,30 | 6,99 | 1.561,95 | 747,75 | 790,90 |
| OR | 2-443 | 8750 | 236 | 189,87 | 6,99 | 1.561,95 | 747,75 | 790,90 |
| OR | | 237 | | 193,70 | 6,99 | 2.819,51 | 1.102,20 | 1.165,79 |
| OR | 2-444 | 8775 | 238 | 196,22 | 6,99 | 1.283,16 | 881,77 | 932,64 |
| OR | | 239 | | 199,80 | 6,99 | 2.819,51 | 1.102,20 | 1.165,79 |
| OR | 2-445 | 8800 | 240 | 202,57 | 6,99 | 2.154,31 | 849,79 | 898,82 |
| OR | | 8825 | 241 | 208,92 | 6,99 | 2.023,00 | 1.062,25 | 1.123,54 |
| OR | 2-446 | 8850 | 242 | 215,27 | 6,99 | 2.237,57 | 882,66 | 933,57 |
| OR | | 8875 | 243 | 221,62 | 6,99 | 2.320,86 | 915,49 | 968,30 |
| OR | 2-447 | 8900 | 244 | 227,97 | 6,99 | == | 915,49 | 968,30 |
| OR | | 8925 | 245 | 234,32 | 6,99 | 2.398,91 | 946,28 | 1.000,88 |
| OR | 2-448 | 8950 | 246 | 240,67 | 6,99 | 2.398,91 | 946,28 | 1.000,88 |
| OR | | 8975 | 247 | 247,00 | 6,99 | 2.476,95 | 977,07 | 1.033,44 |
| OR | 2-449 | 81000 | 248 | 253,57 | 6,99 | 2.575,89 | 1.016,10 | 1.074,72 |
| OR | | 81025 | 249 | 259,70 | 6,99 | 2.575,89 | 1.016,10 | 1.074,72 |
| OR | 2-450 | 81050 | 250 | 266,07 | 6,99 | 2.669,56 | 1.053,04 | 1.113,80 |
| OR | | 81075 | 251 | 272,40 | 6,99 | 3.460,54 | 1.365,06 | 1.443,81 |
| OR | 2-451 | 81100 | 252 | 278,77 | 6,99 | 2.768,43 | 1.092,05 | 1.155,06 |
| OR | | 81125 | 253 | 285,10 | 6,99 | 3.590,52 | 1.416,34 | 1.498,05 |
| OR | 2-452 | 81150 | 254 | 291,47 | 6,99 | 2.971,37 | 1.172,10 | 1.239,73 |
| OR | | 81175 | 255 | 297,80 | 6,99 | 2.971,37 | 1.172,10 | 1.239,73 |

| TIPO | RIFERIMENTI USA | RIFERIMENTI UK | d1 mm | d2 mm | LISTINO SILICONE 70 SH 5-2016 € X1 00 | LISTINO NBR 90 SH 5-2016 € X 100 | LISTINO EPDM 70 SH 5-2016 € X 100 |
|---|---|---|---|---|---|---|---|
| OR | 2-453 | 81200 256 | 304,17 | 6,99 | 2.660,18 | 1.119,76 | 1.184,36 |
| OR | 2-454 | 81250 257 | 316,87 | 6,99 | 2.772,40 | 1.130,70 | 1.195,94 |
| OR | 2-455 | 81300 258 | 329,57 | 6,99 | 2.800,92 | 1.142,34 | 1.208,26 |
| OR | 2-456 | 81350 259 | 342,27 | 6,99 | 2.925,11 | 1.192,99 | 1.261,81 |
| OR | 2-457 | 81400 260 | 354,97 | 6,99 | 3.573,23 | 1.226,07 | 1.296,80 |
| OR | 2-458 | 81450 261 | 367,67 | 6,99 | 3.187,42 | 1.299,96 | 1.374,96 |
| OR | 2-459 | 81500 262 | 380,37 | 6,99 | 3.230,83 | 1.317,68 | 1.393,70 |
| OR | 2-460 | 81550 263 | 393,07 | 6,99 | 3.335,40 | 1.360,32 | 1.438,80 |
| OR | 2-461 | 81600 | 405,26 | 6,99 | 3.837,55 | 1.625,45 | 1.719,22 |
| OR | 2-462 | 81650 | 417,96 | 6,99 | 3.891,95 | 1.648,48 | 1.743,59 |
| OR | 2-463 | 81700 | 430,66 | 6,99 | 3.182,92 | 1.348,17 | 1.425,95 |
| OR | 2-464 | 81750 | 443,36 | 6,99 | 4.799,50 | 2.111,84 | 2.233,66 |
| OR | 2-465 | 81800 | 456,06 | 6,99 | 3.577,86 | 1.515,45 | 1.602,88 |
| OR | 2-466 | 81850 | 468,76 | 6,99 | 3.768,38 | 1.596,15 | 1.688,22 |
| OR | 2-467 | 81900 | 481,46 | 6,99 | 5.961,53 | 2.623,15 | 2.774,49 |
| OR | 2-468 | 81950 | 494,16 | 6,99 | 4.952,66 | 2.179,24 | 2.304,96 |
| OR | 2-469 | 82000 | 506,86 | 6,99 | == | 4.150,16 | 4.389,61 |
| OR | 2-470 | 82100 | 532,26 | 6,99 | == | 5.024,65 | 5.314,54 |
| OR | 2-471 | 82200 | 557,66 | 6,99 | == | 5.229,30 | 5.530,99 |
| OR | 2-472 | 82300 | 582,68 | 6,99 | == | 5.594,28 | 5.917,03 |
| | | | METRIC STANDARD | | | | |
| OR | | | 1,15 | 1,00 | 9,53 | 4,55 | 4,81 |
| OR | | | 1,50 | 1,00 | 9,53 | 143,43 | 151,71 |
| OR | | | 1,80 | 1,00 | 7,62 | 3,65 | 3,86 |
| OR | | | 2,00 | 1,00 | 9,53 | 4,55 | 4,81 |
| OR | | | 2,50 | 1,00 | 7,62 | 3,65 | 3,86 |
| OR | | | 3,00 | 1,00 | 7,62 | 3,65 | 3,86 |
| OR | | | 3,50 | 1,00 | 10,51 | 5,01 | 5,31 |
| OR | | | 4,00 | 1,00 | 8,42 | 4,02 | 4,25 |
| OR | | | 4,50 | 1,00 | 8,42 | 4,02 | 4,25 |
| OR | | | 5,00 | 1,00 | 8,42 | 4,02 | 4,25 |
| OR | | | 5,50 | 1,00 | 10,51 | 5,01 | 5,31 |
| OR | | | 6,00 | 1,00 | 8,42 | 4,02 | 4,25 |
| OR | | | 6,50 | 1,00 | 12,89 | 6,15 | 6,51 |
| OR | | | 7,00 | 1,00 | 10,33 | 4,93 | 5,22 |
| OR | | | 7,50 | 1,00 | 12,89 | 6,15 | 6,51 |
| OR | | | 8,00 | 1,00 | 10,33 | 4,93 | 5,22 |
| OR | | | 8,50 | 1,00 | 12,89 | 6,15 | 6,51 |
| OR | | | 9,00 | 1,00 | 10,33 | 4,93 | 5,22 |
| OR | | | 9,50 | 1,00 | 12,89 | 6,15 | 6,51 |
| OR | | | 10,00 | 1,00 | 10,33 | 4,93 | 5,22 |
| OR | | | 10,50 | 1,00 | 14,07 | 6,72 | 7,10 |
| OR | | | 11,00 | 1,00 | 11,24 | 5,38 | 5,69 |
| OR | | | 11,50 | 1,00 | == | 6,72 | 7,10 |
| OR | | | 12,00 | 1,00 | 11,24 | 5,38 | 5,69 |
| OR | | | 12,50 | 1,00 | 14,07 | 6,72 | 7,10 |
| OR | | | 13,00 | 1,00 | 11,24 | 5,38 | 5,69 |
| OR | | | 13,50 | 1,00 | 19,43 | 9,44 | 9,98 |
| OR | | | 14,00 | 1,00 | 15,16 | 7,24 | 7,66 |

| TIPO | RIFERIMENTI USA | RIFERIMENTI UK | d1 mm | d2 mm | LISTINO SILICONE 70 SH 5-2016 € X 100 | LISTINO NBR 90 SH 5-2016 € X 100 | LISTINO EPDM 70 SH 5-2016 € X 100 |
|---|---|---|---|---|---|---|---|
| OR | | | 15,00 | 1,00 | 15,16 | 7,55 | 7,99 |
| OR | | | 15,50 | 1,00 | 19,43 | 9,44 | 9,98 |
| OR | | | 16,00 | 1,00 | 15,16 | 7,24 | 7,66 |
| OR | | | 16,50 | 1,00 | 333,83 | 219,23 | 231,88 |
| OR | | | 17,00 | 1,00 | 22,34 | 10,85 | 11,47 |
| OR | | | 17,50 | 1,00 | 22,34 | 10,85 | 11,47 |
| OR | | | 18,00 | 1,00 | 17,88 | 8,68 | 9,18 |
| OR | | | 18,50 | 1,00 | 333,83 | 219,23 | 231,88 |
| OR | | | 19,00 | 1,00 | 22,34 | 10,85 | 11,47 |
| OR | | | 19,50 | 1,00 | 22,34 | 10,85 | 11,47 |
| OR | | | 20,00 | 1,00 | 17,88 | 8,68 | 9,18 |
| OR | | | 20,50 | 1,00 | 26,60 | 12,87 | 13,62 |
| OR | | | 21,00 | 1,00 | 26,60 | 12,87 | 13,62 |
| OR | | | 21,50 | 1,00 | 339,12 | 223,12 | 235,99 |
| OR | | | 22,00 | 1,00 | 26,60 | 12,87 | 13,62 |
| OR | | | 22,50 | 1,00 | 31,46 | 15,23 | 16,12 |
| OR | | | 23,00 | 1,00 | 3,76 | 15,23 | 16,12 |
| OR | | | 24,00 | 1,00 | 31,46 | 15,23 | 16,12 |
| OR | | | 25,00 | 1,00 | 31,46 | 15,23 | 16,12 |
| OR | | | 0,73 | 1,02 | 9,53 | 4,55 | 4,81 |
| OR | | | 1,78 | 1,02 | 7,62 | 3,65 | 3,86 |
| OR | | | 1,07 | 1,27 | 9,53 | 4,55 | 4,81 |
| OR | | | 4,70 | 1,42 | 10,51 | 5,01 | 5,31 |
| OR | | | 1,85 | 1,50 | 9,53 | 4,55 | 4,81 |
| OR | | | 2,00 | 1,50 | 9,53 | 4,55 | 4,81 |
| OR | | | 2,50 | 1,50 | 9,53 | 4,55 | 4,81 |
| OR | | | 2,80 | 1,50 | 9,53 | 4,55 | 4,81 |
| OR | | | 3,00 | 1,50 | 7,62 | 3,65 | 3,86 |
| OR | | | 3,50 | 1,50 | 8,42 | 4,02 | 4,25 |
| OR | | | 4,00 | 1,50 | 8,42 | 4,02 | 4,25 |
| OR | | | 4,50 | 1,50 | 8,42 | 4,02 | 4,25 |
| OR | | | 5,00 | 1,50 | 8,42 | 4,02 | 4,25 |
| OR | | | 5,50 | 1,50 | 8,42 | 4,02 | 4,25 |
| OR | | | 6,00 | 1,50 | 8,42 | 4,02 | 4,25 |
| OR | | | 6,50 | 1,50 | 10,33 | 4,93 | 5,22 |
| OR | | | 7,00 | 1,50 | 10,33 | 4,93 | 5,22 |
| OR | | | 7,50 | 1,50 | 10,33 | 4,93 | 5,22 |
| OR | | | 8,00 | 1,50 | 10,33 | 4,93 | 5,22 |
| OR | | | 8,50 | 1,50 | 10,33 | 4,93 | 5,22 |
| OR | | | 9,00 | 1,50 | 10,33 | 4,93 | 5,22 |
| OR | | | 9,50 | 1,50 | 10,33 | 4,93 | 5,22 |
| OR | | | 10,00 | 1,50 | 10,33 | 4,93 | 5,22 |
| OR | | | 10,50 | 1,50 | 14,07 | 6,72 | 7,10 |
| OR | | | 11,00 | 1,50 | == | 5,38 | 5,69 |
| OR | | | 11,50 | 1,50 | 11,24 | 5,38 | 5,69 |
| OR | | | 12,00 | 1,50 | 11,24 | 5,38 | 5,69 |
| OR | | | 12,50 | 1,50 | 11,24 | 5,38 | 5,69 |
| OR | | | 13,00 | 1,50 | 11,24 | 5,38 | 5,69 |
| OR | | | 13,50 | 1,50 | 19,43 | 9,44 | 9,98 |

| TIPO | RIFERIMENTI USA | RIFERIMENTI UK | d1 mm | d2 mm | LISTINO SILICONE 70 SH 5-2016 € X1 00 | LISTINO NBR 90 SH 5-2016 € X 100 | LISTINO EPDM 70 SH 5-2016 € X 100 |
|---|---|---|---|---|---|---|---|
| OR | | | 14,00 | 1,50 | 15,16 | 7,24 | 7,66 |
| OR | | | 14,50 | 1,50 | 355,73 | 137,65 | 145,59 |
| OR | | | 15,00 | 1,50 | 15,16 | 7,24 | 7,66 |
| OR | | | 15,50 | 1,50 | 19,43 | 9,44 | 9,98 |
| OR | | | 16,00 | 1,50 | 15,16 | 7,24 | 7,66 |
| OR | | | 16,50 | 1,50 | 22,34 | 10,85 | 11,47 |
| OR | | | 17,00 | 1,50 | 17,88 | 8,68 | 9,18 |
| OR | | | 17,50 | 1,50 | 22,34 | 10,85 | 11,47 |
| OR | | | 18,00 | 1,50 | 17,88 | 8,68 | 9,18 |
| OR | | | 18,50 | 1,50 | 22,34 | 10,85 | 11,47 |
| OR | | | 19,00 | 1,50 | 17,88 | 8,68 | 9,18 |
| OR | | | 19,50 | 1,50 | 22,34 | 10,85 | 11,47 |
| OR | | | 20,00 | 1,50 | 17,88 | 8,68 | 9,18 |
| OR | | | 20,50 | 1,50 | 26,60 | 12,87 | 13,62 |
| OR | | | 21,00 | 1,50 | 21,27 | 10,31 | 10,91 |
| OR | | | 21,50 | 1,50 | 26,60 | 12,87 | 13,62 |
| OR | | | 22,00 | 1,50 | 21,27 | 10,31 | 10,91 |
| OR | | | 22,50 | 1,50 | 31,46 | 15,23 | 16,12 |
| OR | | | 23,00 | 1,50 | 25,17 | 12,19 | 12,89 |
| OR | | | 24,00 | 1,50 | 25,17 | 12,19 | 12,89 |
| OR | | | 25,00 | 1,50 | 25,17 | 12,19 | 12,89 |
| OR | | | 25,50 | 1,50 | 37,14 | 18,50 | 19,58 |
| OR | | | 26,00 | 1,50 | 29,71 | 14,39 | 15,21 |
| OR | | | 27,00 | 1,50 | 29,71 | 14,39 | 15,21 |
| OR | | | 27,50 | 1,50 | 37,14 | 18,50 | 19,58 |
| OR | | | 28,00 | 1,50 | 29,71 | 14,39 | 15,21 |
| OR | | | 28,50 | 1,50 | 37,14 | 18,50 | 19,58 |
| OR | | | 29,00 | 1,50 | 29,71 | 14,39 | 15,21 |
| OR | | | 29,50 | 1,50 | 37,14 | 18,50 | 19,58 |
| OR | | | 30,00 | 1,50 | 29,71 | 14,39 | 15,21 |
| OR | | | 31,00 | 1,50 | 71,90 | 33,54 | 35,47 |
| OR | | | 31,50 | 1,50 | 366,20 | 244,94 | 259,07 |
| OR | | | 32,00 | 1,50 | 71,90 | 33,54 | 35,47 |
| OR | | | 32,50 | 1,50 | 71,90 | 33,54 | 35,47 |
| OR | | | 33,00 | 1,50 | 71,90 | 33,54 | 35,47 |
| OR | | | 34,00 | 1,50 | 71,90 | 33,54 | 35,47 |
| OR | | | 35,00 | 1,50 | 57,53 | 26,83 | 28,38 |
| OR | | | 36,00 | 1,50 | 89,57 | 37,49 | 39,65 |
| OR | | | 37,00 | 1,50 | 89,57 | 37,49 | 39,65 |
| OR | | | 37,50 | 1,50 | 89,57 | 37,49 | 39,65 |
| OR | | | 38,00 | 1,50 | 89,57 | 37,49 | 39,65 |
| OR | | | 38,50 | 1,50 | 89,57 | 37,49 | 39,65 |
| OR | | | 39,00 | 1,50 | 89,57 | 37,49 | 39,65 |
| OR | | | 39,50 | 1,50 | 366,20 | 37,49 | 39,65 |
| OR | | | 40,00 | 1,50 | 89,57 | 37,49 | 39,65 |
| OR | | | 41,00 | 1,50 | 98,99 | 4,12 | 4,34 |
| OR | | | 42,00 | 1,50 | 98,99 | 44,26 | 46,81 |
| OR | | | 44,00 | 1,50 | 98,99 | 44,26 | 46,81 |
| OR | | | 45,00 | 1,50 | 98,99 | 44,26 | 46,81 |

| TIPO | RIFERIMENTI USA | RIFERIMENTI UK | d1 mm | d2 mm | LISTINO SILICONE 70 SH 5-2016 € X 100 | LISTINO NBR 90 SH 5-2016 € X 100 | LISTINO EPDM 70 SH 5-2016 € X 100 |
|---|---|---|---|---|---|---|---|
| OR | | | 46,00 | 1,50 | 382,16 | 266,99 | 282,40 |
| OR | | | 47,00 | 1,50 | 113,15 | 50,59 | 53,52 |
| OR | | | 48,00 | 1,50 | 113,15 | 50,59 | 53,52 |
| OR | | | 49,00 | 1,50 | 113,15 | 50,59 | 53,52 |
| OR | | | 50,00 | 1,50 | 113,15 | 50,59 | 53,52 |
| OR | | | 52,00 | 1,50 | 122,95 | 54,71 | 57,86 |
| OR | | | 53,00 | 1,50 | 122,95 | 54,71 | 57,86 |
| OR | | | 54,00 | 1,50 | 122,95 | 54,71 | 57,86 |
| OR | | | 55,00 | 1,50 | 122,95 | 54,71 | 57,86 |
| OR | | | 57,00 | 1,50 | 132,01 | 58,74 | 62,13 |
| OR | | | 59,00 | 1,50 | 132,01 | 58,74 | 62,13 |
| OR | | | 60,00 | 1,50 | == | 58,74 | 62,13 |
| OR | | | 61,00 | 1,50 | 179,51 | 72,93 | 77,14 |
| OR | | | 62,00 | 1,50 | 179,51 | 72,93 | 77,14 |
| OR | | | 63,00 | 1,50 | 179,51 | 72,93 | 77,14 |
| OR | | | 64,00 | 1,50 | 179,51 | 72,93 | 77,14 |
| OR | | | 65,00 | 1,50 | 179,51 | 72,93 | 77,14 |
| OR | | | 67,00 | 1,50 | 194,56 | 79,04 | 83,61 |
| OR | | | 69,00 | 1,50 | 194,56 | 79,04 | 83,61 |
| OR | | | 70,00 | 1,50 | 194,56 | 79,04 | 83,61 |
| OR | | | 71,00 | 1,50 | 214,42 | 97,55 | 103,17 |
| OR | | | 72,00 | 1,50 | 512,77 | 357,87 | 378,51 |
| OR | | | 73,00 | 1,50 | 214,42 | 97,55 | 103,17 |
| OR | | | 74,00 | 1,50 | 214,42 | 97,55 | 103,17 |
| OR | | | 75,00 | 1,50 | 214,42 | 97,55 | 103,17 |
| OR | | | 76,00 | 1,50 | 224,35 | 357,87 | 378,51 |
| OR | | | 77,00 | 1,50 | 224,35 | 102,05 | 107,94 |
| OR | | | 78,00 | 1,50 | 224,35 | 102,05 | 107,94 |
| OR | | | 79,00 | 1,50 | 224,35 | 102,05 | 107,94 |
| OR | | | 80,00 | 1,50 | 224,35 | 102,05 | 107,94 |
| OR | | | 81,00 | 1,50 | 239,40 | 108,91 | 115,20 |
| OR | | | 84,00 | 1,50 | 239,40 | 108,91 | 115,20 |
| OR | | | 85,00 | 1,50 | 528,94 | 383,19 | 405,30 |
| OR | | | 88,00 | 1,50 | 254,34 | 115,70 | 122,37 |
| OR | | | 90,00 | 1,50 | 254,34 | 115,70 | 122,37 |
| OR | | | 91,00 | 1,50 | 304,17 | 138,36 | 146,35 |
| OR | | | 92,00 | 1,50 | 304,17 | 138,36 | 146,35 |
| OR | | | 93,00 | 1,50 | 304,17 | 138,36 | 146,35 |
| OR | | | 94,00 | 1,50 | 610,23 | 400,59 | 423,69 |
| OR | | | 95,00 | 1,50 | 304,17 | 138,36 | 146,35 |
| OR | | | 96,00 | 1,50 | 304,17 | 138,36 | 146,35 |
| OR | | | 97,00 | 1,50 | 304,17 | 138,36 | 146,35 |
| OR | | | 98,00 | 1,50 | 304,17 | 138,36 | 146,35 |
| OR | | | 99,00 | 1,50 | 304,17 | 138,36 | 146,35 |
| OR | | | 100,00 | 1,50 | 304,17 | 138,36 | 146,35 |
| BRITISH STANDARD METRIC BS 4518 - SWEDISH STANDARD SMS 1586 | | | | | | | |
| OR | | | 2,75 | 1,60 | 9,53 | 4,55 | 4,81 |
| OR | | | 3,10 | 1,60 | 8,42 | 4,02 | 4,25 |
| OR | | | 4,10 | 1,60 | 10,51 | 5,01 | 5,31 |

| TIPO | RIFERIMENTI USA | RIFERIMENTI UK | d1 mm | d2 mm | LISTINO SILICONE 70 SH 5-2016 € X1 00 | LISTINO NBR 90 SH 5-2016 € X 100 | LISTINO EPDM 70 SH 5-2016 € X 100 |
|---|---|---|---|---|---|---|---|
| OR | | | 5,00 | 1,60 | 10,51 | 5,01 | 5,31 |
| OR | | | 5,10 | 1,60 | 8,42 | 4,93 | 5,22 |
| OR | | | 6,10 | 1,60 | 10,33 | 4,93 | 5,22 |
| OR | | | 7,10 | 1,60 | 10,33 | 4,93 | 5,22 |
| OR | | | 8,10 | 1,60 | 10,33 | 4,93 | 5,22 |
| OR | | | 9,10 | 1,60 | 10,33 | 4,93 | 5,22 |
| OR | | | 10,10 | 1,60 | 11,24 | 5,38 | 5,69 |
| OR | | | 11,10 | 1,60 | 11,24 | 5,38 | 5,69 |
| OR | | | 12,10 | 1,60 | 11,24 | 5,38 | 5,69 |
| OR | | | 13,10 | 1,60 | 15,16 | 7,24 | 7,66 |
| OR | | | 14,10 | 1,60 | 15,16 | 7,24 | 7,66 |
| OR | | | 15,10 | 1,60 | 15,16 | 7,24 | 7,66 |
| OR | | | 16,10 | 1,60 | 22,34 | 10,85 | 11,47 |
| OR | | | 17,10 | 1,60 | 22,34 | 10,85 | 11,47 |
| OR | | | 18,10 | 1,60 | 17,88 | 8,68 | 9,18 |
| OR | | | 19,10 | 1,60 | 17,88 | 8,68 | 9,18 |
| OR | | | 20,10 | 1,60 | 26,60 | 12,87 | 13,62 |
| OR | | | 21,10 | 1,60 | 26,60 | 12,87 | 13,62 |
| OR | | | 22,10 | 1,60 | 25,17 | 12,19 | 12,89 |
| OR | | | 25,10 | 1,60 | 29,71 | 14,39 | 15,21 |
| OR | | | 27,10 | 1,60 | 29,71 | 14,39 | 15,21 |
| OR | | | 29,10 | 1,60 | 37,14 | 18,50 | 19,58 |
| OR | | | 32,10 | 1,60 | 57,53 | 26,83 | 28,38 |
| OR | | | 35,10 | 1,60 | 89,57 | 37,49 | 39,65 |
| OR | | | 37,10 | 1,60 | 64,31 | 30,00 | 31,73 |
| | | | METRIC STANDARD | | | | |
| OR | | | 2,50 | 2,00 | 9,53 | 4,55 | 4,81 |
| OR | | | 3,00 | 2,00 | 7,62 | 3,65 | 3,86 |
| OR | | | 3,50 | 2,00 | 10,51 | 5,01 | 5,31 |
| OR | | | 4,00 | 2,00 | 8,42 | 4,02 | 4,25 |
| OR | | | 4,50 | 2,00 | 8,42 | 4,02 | 4,25 |
| OR | | | 5,00 | 2,00 | 8,42 | 4,02 | 4,25 |
| OR | | | 5,50 | 2,00 | 8,42 | 4,02 | 4,25 |
| OR | | | 6,00 | 2,00 | 8,42 | 4,02 | 4,25 |
| OR | | | 6,50 | 2,00 | 12,89 | 5,48 | 5,80 |
| OR | | | 7,00 | 2,00 | 10,33 | 6,15 | 6,51 |
| OR | | | 7,50 | 2,00 | 10,33 | 8,65 | 9,15 |
| OR | | | 8,00 | 2,00 | 10,33 | 4,93 | 5,22 |
| OR | | | 8,50 | 2,00 | 10,33 | 4,93 | 5,22 |
| OR | | | 9,00 | 2,00 | 10,33 | 4,93 | 5,22 |
| OR | | | 9,50 | 2,00 | 12,89 | 6,15 | 6,51 |
| OR | | | 10,00 | 2,00 | 10,33 | 4,93 | 5,22 |
| OR | | | 10,50 | 2,00 | 11,24 | 5,38 | 5,69 |
| OR | | | 11,00 | 2,00 | 11,24 | 5,38 | 5,69 |
| OR | | | 11,50 | 2,00 | 14,07 | 6,72 | 7,10 |
| OR | | | 12,00 | 2,00 | 11,24 | 5,38 | 5,69 |
| OR | | | 12,50 | 2,00 | 14,07 | 6,72 | 7,10 |
| OR | | | 13,00 | 2,00 | 11,24 | 5,38 | 5,69 |
| OR | | | 13,50 | 2,00 | 19,43 | 9,44 | 9,98 |

| TIPO | RIFERIMENTI USA | RIFERIMENTI UK | d1 mm | d2 mm | LISTINO SILICONE 70 SH 5-2016 € X 100 | LISTINO NBR 90 SH 5-2016 € X 100 | LISTINO EPDM 70 SH 5-2016 € X 100 |
|---|---|---|---|---|---|---|---|
| OR | | | 14,00 | 2,00 | 15,16 | 7,24 | 7,66 |
| OR | | | 14,50 | 2,00 | 19,43 | 9,44 | 9,98 |
| OR | | | 15,00 | 2,00 | 15,16 | 7,24 | 7,66 |
| OR | | | 15,50 | 2,00 | 19,43 | 9,44 | 9,98 |
| OR | | | 16,00 | 2,00 | 15,16 | 7,24 | 7,66 |
| OR | | | 16,50 | 2,00 | 22,34 | 10,85 | 11,47 |
| OR | | | 17,00 | 2,00 | 17,88 | 8,68 | 9,18 |
| OR | | | 17,50 | 2,00 | 22,34 | 10,85 | 11,47 |
| OR | | | 18,00 | 2,00 | 17,88 | 8,68 | 9,18 |
| OR | | | 18,50 | 2,00 | 22,34 | 10,85 | 11,47 |
| OR | | | 19,00 | 2,00 | 17,88 | 8,68 | 9,18 |
| OR | | | 19,50 | 2,00 | 22,34 | 10,85 | 11,47 |
| OR | | | 20,00 | 2,00 | 17,88 | 8,68 | 9,18 |
| OR | | | 20,50 | 2,00 | 26,60 | 12,87 | 13,62 |
| OR | | | 21,00 | 2,00 | 21,27 | 10,31 | 10,91 |
| OR | | | 21,50 | 2,00 | 26,60 | 12,87 | 13,62 |
| OR | | | 22,00 | 2,00 | 21,27 | 10,31 | 10,91 |
| OR | | | 22,50 | 2,00 | 31,46 | 15,23 | 16,12 |
| OR | | | 23,00 | 2,00 | 25,17 | 12,19 | 12,89 |
| OR | | | 23,50 | 2,00 | 31,46 | 15,23 | 16,12 |
| OR | | | 24,00 | 2,00 | 25,17 | 12,19 | 12,89 |
| OR | | | 24,50 | 2,00 | 31,46 | 15,23 | 16,12 |
| OR | | | 25,00 | 2,00 | 25,17 | 12,19 | 12,89 |
| OR | | | 25,50 | 2,00 | 37,14 | 18,50 | 19,58 |
| OR | | | 26,00 | 2,00 | 29,71 | 14,39 | 15,21 |
| OR | | | 26,50 | 2,00 | 37,14 | 18,50 | 19,58 |
| OR | | | 27,00 | 2,00 | 29,71 | 14,39 | 15,21 |
| OR | | | 27,50 | 2,00 | 37,14 | 18,50 | 19,58 |
| OR | | | 28,00 | 2,00 | 29,71 | 14,39 | 15,21 |
| OR | | | 28,50 | 2,00 | 37,14 | 18,50 | 19,58 |
| OR | | | 29,00 | 2,00 | 37,14 | 18,50 | 19,58 |
| OR | | | 29,50 | 2,00 | 37,14 | 18,50 | 19,58 |
| OR | | | 30,00 | 2,00 | 29,71 | 14,39 | 15,21 |
| OR | | | 31,00 | 2,00 | 71,90 | 33,54 | 35,47 |
| OR | | | 31,50 | 2,00 | 71,90 | 33,54 | 35,47 |
| OR | | | 32,00 | 2,00 | 57,53 | 26,83 | 28,38 |
| OR | | | 32,50 | 2,00 | 71,90 | 33,54 | 35,47 |
| OR | | | 33,00 | 2,00 | 57,53 | 26,83 | 28,38 |
| OR | | | 33,50 | 2,00 | 390,08 | 227,35 | 240,47 |
| OR | | | 34,00 | 2,00 | 57,53 | 26,83 | 28,38 |
| OR | | | 35,00 | 2,00 | 57,53 | 26,83 | 28,38 |
| OR | | | 36,00 | 2,00 | 64,31 | 30,00 | 31,73 |
| OR | | | 36,50 | 2,00 | 89,57 | 37,49 | 39,65 |
| OR | | | 37,00 | 2,00 | 71,69 | 30,00 | 31,73 |
| OR | | | 38,00 | 2,00 | 64,31 | 30,00 | 31,73 |
| OR | | | 39,00 | 2,00 | 89,57 | 37,49 | 39,65 |
| OR | | | 40,00 | 2,00 | 64,31 | 30,00 | 31,73 |
| OR | | | 41,00 | 2,00 | 98,99 | 44,26 | 46,81 |
| OR | | | 42,00 | 2,00 | 71,07 | 33,15 | 35,06 |

| TIPO | RIFERIMENTI USA | RIFERIMENTI UK | d1 mm | d2 mm | LISTINO SILICONE 70 SH 5-2016 € X1 00 | LISTINO NBR 90 SH 5-2016 € X 100 | LISTINO EPDM 70 SH 5-2016 € X 100 |
|---|---|---|---|---|---|---|---|
| OR | | | 43,00 | 2,00 | 98,99 | 44,26 | 46,81 |
| OR | | | 44,00 | 2,00 | 98,99 | 44,26 | 46,81 |
| OR | | | 45,00 | 2,00 | 71,07 | 33,15 | 35,06 |
| OR | | | 46,00 | 2,00 | 90,52 | 37,88 | 40,07 |
| OR | | | 47,00 | 2,00 | 90,52 | 37,88 | 40,07 |
| OR | | | 48,00 | 2,00 | 90,52 | 37,88 | 40,07 |
| OR | | | 49,00 | 2,00 | 113,15 | 50,59 | 53,52 |
| OR | | | 50,00 | 2,00 | 90,52 | 37,88 | 40,07 |
| OR | | | 51,00 | 2,00 | 122,95 | 54,71 | 57,86 |
| OR | | | 52,00 | 2,00 | 98,33 | 40,84 | 43,20 |
| OR | | | 53,00 | 2,00 | 98,33 | 40,84 | 43,20 |
| OR | | | 54,00 | 2,00 | 122,95 | 54,71 | 57,86 |
| OR | | | 55,00 | 2,00 | 98,33 | 40,84 | 43,20 |
| OR | | | 56,00 | 2,00 | 105,62 | 47,00 | 49,72 |
| OR | | | 57,00 | 2,00 | 132,01 | 58,74 | 62,13 |
| OR | | | 58,00 | 2,00 | 105,62 | 47,00 | 49,72 |
| OR | | | 60,00 | 2,00 | 105,62 | 47,00 | 49,72 |
| OR | | | 61,00 | 2,00 | 131,13 | 58,34 | 61,71 |
| OR | | | 62,00 | 2,00 | 179,51 | 72,93 | 77,14 |
| OR | | | 63,00 | 2,00 | 131,13 | 58,34 | 61,71 |
| OR | | | 64,00 | 2,00 | 179,51 | 72,93 | 77,14 |
| OR | | | 65,00 | 2,00 | 131,13 | 58,34 | 61,71 |
| OR | | | 66,00 | 2,00 | 142,13 | 63,24 | 66,89 |
| OR | | | 67,00 | 2,00 | 194,56 | 79,04 | 83,61 |
| OR | | | 68,00 | 2,00 | 142,13 | 63,24 | 66,89 |
| OR | | | 69,00 | 2,00 | 194,56 | 79,04 | 83,61 |
| OR | | | 70,00 | 2,00 | 142,13 | 63,24 | 66,89 |
| OR | | | 71,00 | 2,00 | 214,42 | 97,55 | 103,17 |
| OR | | | 72,00 | 2,00 | 156,62 | 69,70 | 73,72 |
| OR | | | 73,00 | 2,00 | 214,42 | 97,55 | 103,17 |
| OR | | | 74,00 | 2,00 | 156,62 | 69,70 | 73,72 |
| OR | | | 75,00 | 2,00 | 156,62 | 69,70 | 73,72 |
| OR | | | 76,00 | 2,00 | 224,35 | 102,05 | 107,94 |
| OR | | | 78,00 | 2,00 | 224,35 | 102,05 | 107,94 |
| OR | | | 79,00 | 2,00 | 542,40 | 325,13 | 343,90 |
| OR | | | 80,00 | 2,00 | 179,48 | 72,92 | 77,13 |
| OR | | | 81,00 | 2,00 | 239,40 | 108,91 | 115,20 |
| OR | | | 82,00 | 2,00 | 239,40 | 108,91 | 115,20 |
| OR | | | 83,00 | 2,00 | 239,40 | 108,91 | 115,20 |
| OR | | | 84,00 | 2,00 | 239,40 | 108,91 | 115,20 |
| OR | | | 85,00 | 2,00 | 191,53 | 77,81 | 82,30 |
| OR | | | 86,00 | 2,00 | 253,01 | 115,70 | 122,37 |
| OR | | | 87,00 | 2,00 | 254,34 | 115,70 | 122,37 |
| OR | | | 88,00 | 2,00 | 254,34 | 115,70 | 122,37 |
| OR | | | 89,00 | 2,00 | 254,34 | 115,70 | 122,37 |
| OR | | | 90,00 | 2,00 | 203,45 | 92,55 | 97,90 |
| OR | | | 91,00 | 2,00 | 304,17 | 138,36 | 146,35 |
| OR | | | 92,00 | 2,00 | 304,17 | 138,36 | 146,35 |
| OR | | | 93,00 | 2,00 | 304,17 | 138,36 | 146,35 |

| TIPO | RIFERIMENTI USA | RIFERIMENTI UK | d1 mm | d2 mm | LISTINO SILICONE 70 SH 5-2016 € X 100 | LISTINO NBR 90 SH 5-2016 € X 100 | LISTINO EPDM 70 SH 5-2016 € X 100 |
|---|---|---|---|---|---|---|---|
| OR | | | 94,00 | 2,00 | 304,17 | 138,36 | 146,35 |
| OR | | | 95,00 | 2,00 | 243,33 | 110,69 | 117,08 |
| OR | | | 96,00 | 2,00 | 304,17 | 138,36 | 146,35 |
| OR | | | 98,00 | 2,00 | 721,93 | 138,36 | 146,35 |
| OR | | | 100,00 | 2,00 | 243,33 | 110,69 | 117,08 |
| BRITISH STD METRIC BS 4518 - JAPANESE STD JIS 240 P+G - SWEDISH STD SMS 1586 | | | | | | | |
| OR | | | 3,30 | 2,40 | 12,26 | 5,86 | 6,19 |
| OR | | | 3,60 | 2,40 | 15,34 | 7,33 | 7,76 |
| OR | | | 4,30 | 2,40 | 12,26 | 5,86 | 6,19 |
| OR | | | 4,60 | 2,40 | 15,34 | 7,33 | 7,76 |
| OR | | | 5,30 | 2,40 | 12,26 | 5,86 | 6,19 |
| OR | | | 5,50 | 2,40 | 15,34 | 7,33 | 7,76 |
| OR | | | 5,60 | 2,40 | 15,34 | 7,33 | 7,76 |
| OR | | | 6,30 | 2,40 | 13,89 | 6,64 | 7,01 |
| OR | | | 6,60 | 2,40 | 17,82 | 8,65 | 9,15 |
| OR | | | 7,30 | 2,40 | 13,89 | 6,64 | 7,01 |
| OR | | | 7,60 | 2,40 | 13,89 | 6,64 | 7,01 |
| OR | | | 8,30 | 2,40 | 13,89 | 6,64 | 7,01 |
| OR | | | 8,60 | 2,40 | 17,82 | 8,65 | 9,15 |
| OR | | | 9,30 | 2,40 | 13,89 | 5,48 | 5,80 |
| OR | | | 9,60 | 2,40 | 17,82 | 6,64 | 7,01 |
| OR | | | 10,30 | 2,40 | 17,19 | 7,99 | 8,46 |
| OR | | | 10,60 | 2,40 | 21,51 | 10,43 | 11,04 |
| OR | | | 11,30 | 2,40 | 17,19 | 7,99 | 8,46 |
| OR | | | 11,50 | 2,40 | 21,51 | 10,43 | 11,04 |
| OR | | | 11,60 | 2,40 | 21,51 | 10,43 | 11,04 |
| OR | | | 12,30 | 2,40 | 17,19 | 7,99 | 8,46 |
| OR | | | 12,60 | 2,40 | 17,19 | 7,99 | 8,46 |
| OR | | | 13,30 | 2,40 | 18,79 | 9,12 | 9,64 |
| OR | | | 13,50 | 2,40 | 23,49 | 11,41 | 12,07 |
| OR | | | 13,60 | 2,40 | 18,79 | 9,12 | 9,64 |
| OR | | | 14,30 | 2,40 | 18,79 | 9,12 | 9,64 |
| OR | | | 14,60 | 2,40 | 23,49 | 11,41 | 12,07 |
| OR | | | 15,30 | 2,40 | 18,79 | 9,12 | 9,64 |
| OR | | | 15,50 | 2,40 | 23,49 | 11,41 | 12,07 |
| OR | | | 15,60 | 2,40 | 18,79 | 9,12 | 9,64 |
| OR | | | 16,30 | 2,40 | 20,55 | 9,98 | 10,56 |
| OR | | | 16,60 | 2,40 | 25,68 | 12,47 | 13,18 |
| OR | | | 17,30 | 2,40 | 20,55 | 9,98 | 10,56 |
| OR | | | 17,50 | 2,40 | 25,68 | 12,47 | 13,18 |
| OR | | | 17,60 | 2,40 | 20,55 | 9,98 | 10,56 |
| OR | | | 18,30 | 2,40 | 20,55 | 9,98 | 10,56 |
| OR | | | 18,60 | 2,40 | 20,55 | 9,98 | 10,56 |
| OR | | | 19,30 | 2,40 | 20,55 | 9,98 | 10,56 |
| OR | | | 19,60 | 2,40 | 25,68 | 12,47 | 13,18 |
| OR | | | 20,30 | 2,40 | 22,50 | 10,89 | 11,51 |
| OR | | | 20,50 | 2,40 | 28,11 | 13,61 | 14,40 |
| OR | | | 20,60 | 2,40 | 28,11 | 13,61 | 14,40 |
| OR | | | 21,30 | 2,40 | 22,50 | 10,89 | 11,51 |

| TIPO | RIFERIMENTI USA | RIFERIMENTI UK | d1 mm | d2 mm | LISTINO SILICONE 70 SH 5-2016 € X1 00 | LISTINO NBR 90 SH 5-2016 € X 100 | LISTINO EPDM 70 SH 5-2016 € X 100 |
|---|---|---|---|---|---|---|---|
| OR | | | 21,50 | 2,40 | 28,11 | 13,61 | 14,40 |
| OR | | | 21,60 | 2,40 | 22,50 | 10,89 | 11,51 |
| OR | | | 22,30 | 2,40 | 28,53 | 13,82 | 14,62 |
| OR | | | 23,30 | 2,40 | 31,46 | 13,82 | 14,62 |
| OR | | | 23,50 | 2,40 | 35,67 | 17,78 | 18,81 |
| OR | | | 24,50 | 2,40 | 35,67 | 17,78 | 18,81 |
| OR | | | 24,60 | 2,40 | 28,53 | 13,82 | 14,62 |
| OR | | | 25,30 | 2,40 | 32,31 | 15,65 | 16,54 |
| OR | | | 27,50 | 2,40 | 43,15 | 20,13 | 21,29 |
| OR | | | 27,60 | 2,40 | 32,31 | 15,65 | 16,54 |
| OR | | | 29,60 | 2,40 | 43,15 | 20,13 | 21,29 |
| OR | | | 30,30 | 2,40 | 71,90 | 33,54 | 35,47 |
| OR | | | 31,60 | 2,40 | 71,90 | 33,54 | 35,47 |
| OR | | | 33,30 | 2,40 | 57,53 | 26,83 | 28,38 |
| OR | | | 34,60 | 2,40 | 71,90 | 33,54 | 35,47 |
| OR | | | 37,60 | 2,40 | 89,57 | 37,49 | 39,65 |
| OR | | | 39,60 | 2,40 | 89,57 | 37,49 | 39,65 |
| OR | | | 41,60 | 2,40 | 99,42 | 44,45 | 47,02 |
| OR | | | 44,60 | 2,40 | 99,42 | 44,45 | 47,02 |
| OR | | | 47,60 | 2,40 | 113,15 | 50,59 | 53,52 |
| OR | | | 51,60 | 2,40 | 122,95 | 54,71 | 57,86 |
| OR | | | 54,60 | 2,40 | 122,95 | 54,71 | 57,86 |
| OR | | | 57,60 | 2,40 | 132,01 | 58,74 | 62,13 |
| OR | | | 59,60 | 2,40 | 132,01 | 58,74 | 62,13 |
| OR | | | 64,60 | 2,40 | 179,51 | 72,93 | 77,14 |
| OR | | | 67,60 | 2,40 | 194,56 | 79,04 | 83,61 |
| | | | METRIC STANDARD | | | | |
| OR | | | 4,00 | 2,50 | 12,26 | 5,86 | 6,19 |
| OR | | | 5,00 | 2,50 | 12,26 | 5,86 | 6,19 |
| OR | | | 5,50 | 2,50 | 15,34 | 7,33 | 7,76 |
| OR | | | 6,00 | 2,50 | 12,26 | 5,86 | 6,19 |
| OR | | | 6,50 | 2,50 | 17,82 | 8,65 | 9,15 |
| OR | | | 7,00 | 2,50 | 13,89 | 6,64 | 7,01 |
| OR | | | 7,50 | 2,50 | 17,82 | 8,65 | 9,15 |
| OR | | | 8,00 | 2,50 | 13,89 | 6,64 | 7,01 |
| OR | | | 8,50 | 2,50 | 17,82 | 8,65 | 9,15 |
| OR | | | 9,00 | 2,50 | 13,89 | 6,64 | 7,01 |
| OR | | | 9,50 | 2,50 | 17,82 | 8,65 | 9,15 |
| OR | | | 10,00 | 2,50 | 13,89 | 6,64 | 7,01 |
| OR | | | 10,50 | 2,50 | 21,51 | 10,43 | 11,04 |
| OR | | | 11,00 | 2,50 | 17,19 | 7,99 | 8,46 |
| OR | | | 11,50 | 2,50 | 21,51 | 10,43 | 11,04 |
| OR | | | 12,00 | 2,50 | 17,19 | 7,99 | 8,46 |
| OR | | | 12,50 | 2,50 | 21,51 | 10,43 | 11,04 |
| OR | | | 13,00 | 2,50 | 17,19 | 7,99 | 8,46 |
| OR | | | 13,50 | 2,50 | 23,49 | 11,41 | 12,07 |
| OR | | | 14,00 | 2,50 | 18,79 | 9,12 | 9,64 |
| OR | | | 14,50 | 2,50 | 23,49 | 11,41 | 12,07 |
| OR | | | 15,00 | 2,50 | 18,79 | 9,12 | 9,64 |

| TIPO | RIFERIMENTI USA | RIFERIMENTI UK | d1 mm | d2 mm | LISTINO SILICONE 70 SH 5-2016 € X 100 | LISTINO NBR 90 SH 5-2016 € X 100 | LISTINO EPDM 70 SH 5-2016 € X 100 |
|---|---|---|---|---|---|---|---|
| OR | | | 15,50 | 2,50 | 23,49 | 11,41 | 12,07 |
| OR | | | 16,00 | 2,50 | 18,79 | 9,12 | 9,64 |
| OR | | | 16,50 | 2,50 | 25,68 | 12,47 | 13,18 |
| OR | | | 17,00 | 2,50 | 20,55 | 9,98 | 10,56 |
| OR | | | 17,50 | 2,50 | 25,68 | 12,47 | 13,18 |
| OR | | | 18,00 | 2,50 | 20,55 | 9,98 | 10,56 |
| OR | | | 18,50 | 2,50 | 25,68 | 12,47 | 13,18 |
| OR | | | 19,00 | 2,50 | 20,55 | 9,98 | 10,56 |
| OR | | | 19,50 | 2,50 | 25,68 | 12,47 | 13,18 |
| OR | | | 20,00 | 2,50 | 20,55 | 9,98 | 10,56 |
| OR | | | 20,50 | 2,50 | 28,11 | 13,61 | 14,40 |
| OR | | | 21,00 | 2,50 | 22,50 | 10,89 | 11,51 |
| OR | | | 21,50 | 2,50 | 390,08 | 233,20 | 246,66 |
| OR | | | 22,00 | 2,50 | 22,50 | 10,89 | 11,51 |
| OR | | | 22,50 | 2,50 | 35,67 | 17,78 | 18,81 |
| OR | | | 23,00 | 2,50 | 28,53 | 13,82 | 14,62 |
| OR | | | 24,00 | 2,50 | 28,53 | 13,82 | 14,62 |
| OR | | | 24,50 | 2,50 | 35,67 | 17,78 | 18,81 |
| OR | | | 25,00 | 2,50 | 28,53 | 13,82 | 14,62 |
| OR | | | 26,00 | 2,50 | 32,31 | 15,65 | 16,54 |
| OR | | | 26,50 | 2,50 | 390,08 | 233,20 | 246,66 |
| OR | | | 27,00 | 2,50 | 32,31 | 15,65 | 16,54 |
| OR | | | 27,50 | 2,50 | 43,15 | 20,13 | 21,29 |
| OR | | | 28,00 | 2,50 | 32,31 | 15,65 | 16,54 |
| OR | | | 28,50 | 2,50 | 43,15 | 20,13 | 21,29 |
| OR | | | 29,00 | 2,50 | 32,31 | 15,65 | 16,54 |
| OR | | | 29,50 | 2,50 | 43,15 | 20,13 | 21,29 |
| OR | | | 30,00 | 2,50 | 32,31 | 15,65 | 16,54 |
| OR | | | 31,00 | 2,50 | 71,90 | 33,54 | 35,47 |
| OR | | | 32,00 | 2,50 | 71,90 | 33,54 | 35,47 |
| OR | | | 33,00 | 2,50 | 71,90 | 33,54 | 35,47 |
| OR | | | 34,00 | 2,50 | 71,90 | 33,54 | 35,47 |
| OR | | | 34,50 | 2,50 | 71,90 | 33,54 | 35,47 |
| OR | | | 35,00 | 2,50 | 57,53 | 26,83 | 28,38 |
| OR | | | 35,50 | 2,50 | 89,57 | 37,49 | 39,65 |
| OR | | | 36,00 | 2,50 | 89,57 | 37,49 | 39,65 |
| OR | | | 36,50 | 2,50 | 89,57 | 37,49 | 39,65 |
| OR | | | 37,00 | 2,50 | 89,57 | 37,49 | 39,65 |
| OR | | | 38,00 | 2,50 | 89,57 | 37,49 | 39,65 |
| OR | | | 38,50 | 2,50 | 89,57 | 37,49 | 39,65 |
| OR | | | 39,00 | 2,50 | 89,57 | 37,49 | 39,65 |
| OR | | | 39,50 | 2,50 | 89,57 | 37,49 | 39,65 |
| OR | | | 40,00 | 2,50 | 64,31 | 30,00 | 31,73 |
| OR | | | 41,00 | 2,50 | 98,99 | 44,26 | 46,81 |
| OR | | | 42,00 | 2,50 | 71,07 | 33,15 | 35,06 |
| OR | | | 43,00 | 2,50 | 98,99 | 44,26 | 46,81 |
| OR | | | 44,00 | 2,50 | 98,99 | 44,26 | 46,81 |
| OR | | | 45,00 | 2,50 | 71,07 | 33,15 | 35,06 |
| OR | | | 46,00 | 2,50 | 113,15 | 50,59 | 53,52 |

| TIPO | RIFERIMENTI USA | RIFERIMENTI UK | d1 mm | d2 mm | LISTINO SILICONE 70 SH 5-2016 € X1 00 | LISTINO NBR 90 SH 5-2016 € X 100 | LISTINO EPDM 70 SH 5-2016 € X 100 |
|---|---|---|---|---|---|---|---|
| OR | | | 47,00 | 2,50 | 113,15 | 50,59 | 53,52 |
| OR | | | 48,00 | 2,50 | 113,15 | 50,59 | 53,52 |
| OR | | | 49,00 | 2,50 | 113,15 | 50,59 | 53,52 |
| OR | | | 50,00 | 2,50 | 90,52 | 37,88 | 40,07 |
| OR | | | 51,00 | 2,50 | 122,95 | 54,71 | 57,86 |
| OR | | | 52,00 | 2,50 | 122,95 | 54,71 | 57,86 |
| OR | | | 53,00 | 2,50 | 122,95 | 54,71 | 57,86 |
| OR | | | 54,00 | 2,50 | 122,95 | 54,71 | 57,86 |
| OR | | | 55,00 | 2,50 | 122,95 | 54,71 | 57,86 |
| OR | | | 56,00 | 2,50 | 132,01 | 58,74 | 62,13 |
| OR | | | 57,00 | 2,50 | 105,62 | 47,00 | 49,72 |
| OR | | | 58,00 | 2,50 | 132,01 | 58,74 | 62,13 |
| OR | | | 59,00 | 2,50 | 105,62 | 47,00 | 49,72 |
| OR | | | 60,00 | 2,50 | 105,62 | 47,00 | 49,72 |
| OR | | | 62,00 | 2,50 | 179,51 | 72,93 | 77,14 |
| OR | | | 63,00 | 2,50 | 131,13 | 58,34 | 61,71 |
| OR | | | 65,00 | 2,50 | 131,13 | 58,34 | 61,71 |
| OR | | | 66,00 | 2,50 | 142,13 | 63,24 | 66,89 |
| OR | | | 67,00 | 2,50 | 194,56 | 79,04 | 83,61 |
| OR | | | 68,00 | 2,50 | 194,56 | 79,04 | 83,61 |
| OR | | | 70,00 | 2,50 | 142,13 | 63,24 | 66,89 |
| OR | | | 72,00 | 2,50 | 156,62 | 69,70 | 73,72 |
| OR | | | 73,00 | 2,50 | 214,42 | 97,55 | 103,17 |
| OR | | | 74,00 | 2,50 | 568,62 | 336,67 | 356,09 |
| OR | | | 75,00 | 2,50 | 156,62 | 69,70 | 73,72 |
| OR | | | 76,00 | 2,50 | 179,48 | 72,92 | 77,13 |
| OR | | | 78,00 | 2,50 | 224,35 | 102,05 | 107,94 |
| OR | | | 79,00 | 2,50 | 224,35 | 102,05 | 107,94 |
| OR | | | 80,00 | 2,50 | 179,48 | 72,92 | 77,13 |
| OR | | | 82,00 | 2,50 | 191,53 | 77,81 | 82,30 |
| OR | | | 83,00 | 2,50 | 239,40 | 108,91 | 115,20 |
| OR | | | 85,00 | 2,50 | 191,53 | 77,81 | 82,30 |
| OR | | | 86,00 | 2,50 | 254,34 | 115,70 | 122,37 |
| OR | | | 87,00 | 2,50 | 254,34 | 115,70 | 122,37 |
| OR | | | 88,00 | 2,50 | 254,34 | 115,70 | 122,37 |
| OR | | | 90,00 | 2,50 | 203,45 | 92,55 | 97,90 |
| OR | | | 92,00 | 2,50 | 304,17 | 138,36 | 146,35 |
| OR | | | 93,00 | 2,50 | 753,97 | 365,76 | 386,87 |
| OR | | | 94,00 | 2,50 | 304,17 | 138,36 | 146,35 |
| OR | | | 95,00 | 2,50 | 304,17 | 138,36 | 146,35 |
| OR | | | 96,00 | 2,50 | 304,17 | 138,36 | 146,35 |
| OR | | | 98,00 | 2,50 | 304,17 | 138,36 | 146,35 |
| OR | | | 100,00 | 2,50 | 243,33 | 110,69 | 117,08 |
| OR | | | 101,00 | 2,50 | 305,25 | 140,04 | 148,11 |
| OR | | | 102,00 | 2,50 | 305,25 | 140,04 | 148,11 |
| OR | | | 103,00 | 2,50 | 305,25 | 140,04 | 148,11 |
| OR | | | 104,00 | 2,50 | 305,25 | 140,04 | 148,11 |
| OR | | | 105,00 | 2,50 | 305,25 | 140,04 | 148,11 |
| OR | | | 106,00 | 2,50 | 305,25 | 140,04 | 148,11 |

| TIPO | RIFERIMENTI USA | RIFERIMENTI UK | d1 mm | d2 mm | LISTINO SILICONE 70 SH 5-2016 € X 100 | LISTINO NBR 90 SH 5-2016 € X 100 | LISTINO EPDM 70 SH 5-2016 € X 100 |
|---|---|---|---|---|---|---|---|
| OR | | | 107,00 | 2,50 | 305,25 | 140,04 | 148,11 |
| OR | | | 108,00 | 2,50 | 759,14 | 467,52 | 494,50 |
| OR | | | 109,00 | 2,50 | 759,14 | 467,52 | 494,50 |
| OR | | | 110,00 | 2,50 | 305,25 | 140,04 | 148,11 |
| OR | | | 112,00 | 2,50 | 790,42 | 524,54 | 554,80 |
| OR | | | 113,00 | 2,50 | 324,38 | 148,81 | 157,40 |
| OR | | | 115,00 | 2,50 | 324,38 | 148,81 | 157,40 |
| OR | | | 117,00 | 2,50 | 324,38 | 148,81 | 157,40 |
| OR | | | 118,00 | 2,50 | 324,38 | 148,81 | 157,40 |
| OR | | | 120,00 | 2,50 | 324,38 | 148,81 | 157,40 |
| OR | | | 121,00 | 2,50 | 353,04 | 161,96 | 171,31 |
| OR | | | 123,00 | 2,50 | 353,04 | 161,96 | 171,31 |
| OR | | | 124,00 | 2,50 | 353,04 | 161,96 | 171,31 |
| OR | | | 125,00 | 2,50 | 353,04 | 161,96 | 171,31 |
| OR | | | 127,00 | 2,50 | 353,04 | 161,96 | 171,31 |
| OR | | | 128,00 | 2,50 | 921,98 | 581,28 | 614,82 |
| OR | | | 130,00 | 2,50 | 353,04 | 161,96 | 171,31 |
| OR | | | 131,00 | 2,50 | 372,03 | 185,46 | 196,17 |
| OR | | | 133,00 | 2,50 | 372,03 | 185,46 | 196,17 |
| OR | | | 134,00 | 2,50 | 372,03 | 185,46 | 196,17 |
| OR | | | 135,00 | 2,50 | 372,03 | 185,46 | 196,17 |
| OR | | | 137,00 | 2,50 | 1.041,96 | 563,53 | 596,04 |
| OR | | | 138,00 | 2,50 | 1.041,96 | 563,53 | 596,04 |
| OR | | | 140,00 | 2,50 | 1.041,96 | 563,53 | 596,04 |
| OR | | | 144,00 | 2,50 | 468,97 | 199,78 | 211,30 |
| OR | | | 145,00 | 2,50 | 468,97 | 199,78 | 211,30 |
| OR | | | 146,00 | 2,50 | 468,97 | 199,78 | 211,30 |
| OR | | | 150,00 | 2,50 | 468,97 | 199,78 | 211,30 |
| | | | METRIC STANDARD | | | | |
| OR | | | 3,00 | 3,00 | 18,62 | 9,05 | 9,57 |
| OR | | | 3,50 | 3,00 | 21,51 | 10,43 | 11,04 |
| OR | | | 4,00 | 3,00 | 21,51 | 10,43 | 11,04 |
| OR | | | 5,00 | 3,00 | 21,51 | 10,43 | 11,04 |
| OR | | | 6,00 | 3,00 | 17,19 | 7,99 | 8,46 |
| OR | | | 6,50 | 3,00 | 22,34 | 10,85 | 11,47 |
| OR | | | 7,00 | 3,00 | 17,88 | 8,68 | 9,18 |
| OR | | | 8,00 | 3,00 | 17,88 | 8,68 | 9,18 |
| OR | | | 9,00 | 3,00 | 17,88 | 8,68 | 9,18 |
| OR | | | 9,50 | 3,00 | 22,34 | 10,85 | 11,47 |
| OR | | | 10,00 | 3,00 | 17,88 | 8,68 | 9,18 |
| OR | | | 10,50 | 3,00 | 23,58 | 11,45 | 12,11 |
| OR | | | 11,00 | 3,00 | 23,58 | 11,45 | 12,11 |
| OR | | | 11,50 | 3,00 | 23,58 | 11,45 | 12,11 |
| OR | | | 12,00 | 3,00 | 18,85 | 9,16 | 9,68 |
| OR | | | 12,50 | 3,00 | 23,58 | 11,45 | 12,11 |
| OR | | | 13,00 | 3,00 | 18,85 | 9,16 | 9,68 |
| OR | | | 13,50 | 3,00 | 24,75 | 12,03 | 12,71 |
| OR | | | 14,00 | 3,00 | 19,80 | 9,61 | 10,17 |
| OR | | | 14,50 | 3,00 | 24,75 | 12,03 | 12,71 |

| TIPO | RIFERIMENTI USA | RIFERIMENTI UK | d1 mm | d2 mm | LISTINO SILICONE 70 SH 5-2016 € X1 00 | LISTINO NBR 90 SH 5-2016 € X 100 | LISTINO EPDM 70 SH 5-2016 € X 100 |
|---|---|---|---|---|---|---|---|
| OR | | | 15,00 | 3,00 | 19,80 | 9,61 | 10,17 |
| OR | | | 15,50 | 3,00 | 24,75 | 12,03 | 12,71 |
| OR | | | 16,00 | 3,00 | 19,80 | 9,61 | 10,17 |
| OR | | | 17,00 | 3,00 | 21,38 | 10,38 | 10,98 |
| OR | | | 17,50 | 3,00 | 26,73 | 12,97 | 13,72 |
| OR | | | 18,00 | 3,00 | 21,38 | 10,38 | 10,98 |
| OR | | | 18,50 | 3,00 | 26,73 | 12,97 | 13,72 |
| OR | | | 19,00 | 3,00 | 21,38 | 10,38 | 10,98 |
| OR | | | 19,50 | 3,00 | 21,38 | 10,38 | 10,98 |
| OR | | | 20,00 | 3,00 | 21,38 | 10,38 | 10,98 |
| OR | | | 21,00 | 3,00 | 23,03 | 11,14 | 11,78 |
| OR | | | 21,50 | 3,00 | 28,78 | 13,95 | 14,75 |
| OR | | | 22,00 | 3,00 | 23,03 | 11,14 | 11,78 |
| OR | | | 22,50 | 3,00 | 35,89 | 17,89 | 18,93 |
| OR | | | 23,00 | 3,00 | 28,73 | 13,90 | 14,71 |
| OR | | | 23,50 | 3,00 | 457,83 | 233,20 | 246,66 |
| OR | | | 24,00 | 3,00 | 28,73 | 233,20 | 246,66 |
| OR | | | 24,20 | 3,00 | 28,73 | 13,90 | 14,71 |
| OR | | | 24,50 | 3,00 | 457,83 | 233,20 | 246,66 |
| OR | | | 24,60 | 3,00 | 457,83 | 233,20 | 246,66 |
| OR | | | 25,00 | 3,00 | 28,73 | 13,90 | 14,71 |
| OR | | | 25,50 | 3,00 | 57,35 | 26,75 | 28,30 |
| OR | | | 26,00 | 3,00 | 45,87 | 21,39 | 22,63 |
| OR | | | 26,20 | 3,00 | 45,87 | 21,39 | 22,63 |
| OR | | | 26,50 | 3,00 | 57,35 | 26,75 | 28,30 |
| OR | | | 27,00 | 3,00 | 45,87 | 21,39 | 22,63 |
| OR | | | 27,50 | 3,00 | 45,87 | 21,39 | 22,63 |
| OR | | | 28,00 | 3,00 | 45,87 | 21,39 | 22,63 |
| OR | | | 28,50 | 3,00 | 57,35 | 26,75 | 28,30 |
| OR | | | 29,00 | 3,00 | 45,87 | 21,39 | 22,63 |
| OR | | | 29,20 | 3,00 | 45,87 | 21,39 | 22,63 |
| OR | | | 29,50 | 3,00 | 57,35 | 26,75 | 28,30 |
| OR | | | 30,00 | 3,00 | 45,87 | 21,39 | 22,63 |
| OR | | | 31,00 | 3,00 | 60,91 | 28,41 | 30,05 |
| OR | | | 31,50 | 3,00 | 469,99 | 234,20 | 247,70 |
| OR | | | 32,00 | 3,00 | 60,91 | 28,41 | 30,05 |
| OR | | | 32,20 | 3,00 | 60,91 | 28,41 | 30,05 |
| OR | | | 33,00 | 3,00 | 76,15 | 35,53 | 37,57 |
| OR | | | 33,50 | 3,00 | 76,15 | 35,53 | 37,57 |
| OR | | | 34,00 | 3,00 | 60,91 | 28,41 | 30,05 |
| OR | | | 34,20 | 3,00 | 60,91 | 28,41 | 30,05 |
| OR | | | 35,00 | 3,00 | 60,91 | 28,41 | 30,05 |
| OR | | | 35,50 | 3,00 | 94,35 | 39,48 | 41,75 |
| OR | | | 36,00 | 3,00 | 67,70 | 31,58 | 33,41 |
| OR | | | 36,20 | 3,00 | 67,70 | 31,58 | 33,41 |
| OR | | | 36,50 | 3,00 | 94,35 | 39,48 | 41,75 |
| OR | | | 37,00 | 3,00 | 67,70 | 31,58 | 33,41 |
| OR | | | 37,47 | 3,00 | 67,70 | 31,58 | 33,41 |
| OR | | | 37,50 | 3,00 | 67,70 | 31,58 | 33,41 |

| TIPO | RIFERIMENTI USA | RIFERIMENTI UK | d1 mm | d2 mm | LISTINO SILICONE 70 SH 5-2016 € X 100 | LISTINO NBR 90 SH 5-2016 € X 100 | LISTINO EPDM 70 SH 5-2016 € X 100 |
|---|---|---|---|---|---|---|---|
| OR | | | 38,00 | 3,00 | 67,70 | 31,58 | 33,41 |
| OR | | | 38,50 | 3,00 | 469,99 | 234,20 | 247,70 |
| OR | | | 39,00 | 3,00 | 67,70 | 31,58 | 33,41 |
| OR | | | 39,20 | 3,00 | 67,70 | 31,58 | 33,41 |
| OR | | | 40,00 | 3,00 | 67,70 | 31,58 | 33,41 |
| OR | | | 41,00 | 3,00 | 73,84 | 34,45 | 36,44 |
| OR | | | 41,50 | 3,00 | 73,84 | 34,45 | 36,44 |
| OR | | | 42,00 | 3,00 | 73,84 | 34,45 | 36,44 |
| OR | | | 42,20 | 3,00 | 73,84 | 34,45 | 36,44 |
| OR | | | 43,00 | 3,00 | 73,84 | 34,45 | 36,44 |
| OR | | | 43,69 | 3,00 | 102,90 | 46,01 | 48,66 |
| OR | | | 44,00 | 3,00 | 73,84 | 34,45 | 36,44 |
| OR | | | 44,20 | 3,00 | 73,84 | 34,45 | 36,44 |
| OR | | | 44,50 | 3,00 | 73,84 | 34,45 | 36,44 |
| OR | | | 45,00 | 3,00 | 73,84 | 34,45 | 36,44 |
| OR | | | 46,00 | 3,00 | 98,01 | 41,02 | 43,37 |
| OR | | | 47,00 | 3,00 | 98,01 | 41,02 | 43,37 |
| OR | | | 48,00 | 3,00 | 98,01 | 41,02 | 43,37 |
| OR | | | 49,00 | 3,00 | 98,01 | 41,02 | 43,37 |
| OR | | | 49,50 | 3,00 | 98,01 | 41,02 | 43,37 |
| OR | | | 50,00 | 3,00 | 98,01 | 41,02 | 43,37 |
| OR | | | 51,00 | 3,00 | 105,62 | 47,00 | 49,72 |
| OR | | | 52,00 | 3,00 | 132,01 | 58,74 | 62,13 |
| OR | | | 53,00 | 3,00 | 105,62 | 47,00 | 49,72 |
| OR | | | 54,00 | 3,00 | 105,62 | 47,00 | 49,72 |
| OR | | | 54,50 | 3,00 | 105,62 | 47,00 | 49,72 |
| OR | | | 55,00 | 3,00 | 105,62 | 47,00 | 49,72 |
| OR | | | 56,00 | 3,00 | 112,92 | 50,26 | 53,16 |
| OR | | | 57,00 | 3,00 | 112,92 | 50,26 | 53,16 |
| OR | | | 58,00 | 3,00 | 112,92 | 50,26 | 53,16 |
| OR | | | 59,00 | 3,00 | 112,92 | 50,26 | 53,16 |
| OR | | | 59,36 | 3,00 | 141,18 | 62,82 | 66,45 |
| OR | | | 59,50 | 3,00 | 112,92 | 50,26 | 53,16 |
| OR | | | 60,00 | 3,00 | 112,92 | 50,26 | 53,16 |
| OR | | | 61,00 | 3,00 | 184,52 | 74,95 | 79,28 |
| OR | | | 62,00 | 3,00 | 134,78 | 59,98 | 63,43 |
| OR | | | 63,00 | 3,00 | 184,52 | 74,95 | 79,28 |
| OR | | | 64,00 | 3,00 | 575,92 | 59,98 | 63,43 |
| OR | | | 64,50 | 3,00 | 134,78 | 59,98 | 63,43 |
| OR | | | 65,00 | 3,00 | 134,78 | 59,98 | 63,43 |
| OR | | | 66,00 | 3,00 | 149,37 | 66,45 | 70,29 |
| OR | | | 67,00 | 3,00 | 204,50 | 93,03 | 98,40 |
| OR | | | 68,00 | 3,00 | 149,37 | 66,45 | 70,29 |
| OR | | | 69,00 | 3,00 | 204,50 | 93,03 | 98,40 |
| OR | | | 69,50 | 3,00 | 149,37 | 66,45 | 70,29 |
| OR | | | 70,00 | 3,00 | 149,37 | 66,45 | 70,29 |
| OR | | | 71,00 | 3,00 | 224,35 | 102,05 | 107,94 |
| OR | | | 72,00 | 3,00 | 179,48 | 72,92 | 77,13 |
| OR | | | 73,00 | 3,00 | 224,35 | 102,05 | 107,94 |

| TIPO | RIFERIMENTI USA | RIFERIMENTI UK | d1 mm | d2 mm | LISTINO SILICONE 70 SH 5-2016 € X1 00 | LISTINO NBR 90 SH 5-2016 € X 100 | LISTINO EPDM 70 SH 5-2016 € X 100 |
|---|---|---|---|---|---|---|---|
| OR | | | 74,00 | 3,00 | 179,48 | 72,92 | 77,13 |
| OR | | | 74,50 | 3,00 | 179,48 | 72,92 | 77,13 |
| OR | | | 75,00 | 3,00 | 179,48 | 72,92 | 77,13 |
| OR | | | 76,00 | 3,00 | 191,53 | 77,81 | 82,30 |
| OR | | | 77,00 | 3,00 | 239,40 | 108,91 | 115,20 |
| OR | | | 78,00 | 3,00 | 191,53 | 77,81 | 82,30 |
| OR | | | 79,00 | 3,00 | 191,53 | 77,81 | 82,30 |
| OR | | | 79,50 | 3,00 | 191,53 | 77,81 | 82,30 |
| OR | | | 80,00 | 3,00 | 191,53 | 77,81 | 82,30 |
| OR | | | 81,00 | 3,00 | 261,35 | 118,90 | 125,75 |
| OR | | | 82,00 | 3,00 | 209,06 | 95,11 | 100,59 |
| OR | | | 83,00 | 3,00 | 209,06 | 95,11 | 100,59 |
| OR | | | 84,00 | 3,00 | 209,06 | 95,11 | 100,59 |
| OR | | | 84,50 | 3,00 | 209,06 | 95,11 | 100,59 |
| OR | | | 85,00 | 3,00 | 209,06 | 95,11 | 100,59 |
| OR | | | 86,00 | 3,00 | 269,30 | 122,52 | 129,57 |
| OR | | | 86,50 | 3,00 | 269,30 | 122,52 | 129,57 |
| OR | | | 87,00 | 3,00 | 269,30 | 122,52 | 129,57 |
| OR | | | 88,00 | 3,00 | 215,43 | 97,99 | 103,65 |
| OR | | | 89,00 | 3,00 | 269,30 | 122,52 | 129,57 |
| OR | | | 90,00 | 3,00 | 215,43 | 97,99 | 103,65 |
| OR | | | 91,00 | 3,00 | 304,17 | 138,36 | 146,35 |
| OR | | | 92,00 | 3,00 | 243,33 | 110,69 | 117,08 |
| OR | | | 93,00 | 3,00 | 304,17 | 138,36 | 146,35 |
| OR | | | 94,00 | 3,00 | 243,33 | 110,69 | 117,08 |
| OR | | | 94,50 | 3,00 | 243,33 | 110,69 | 117,08 |
| OR | | | 95,00 | 3,00 | 243,33 | 110,69 | 117,08 |
| OR | | | 96,00 | 3,00 | 243,33 | 110,69 | 117,08 |
| OR | | | 97,00 | 3,00 | 304,17 | 138,36 | 146,35 |
| OR | | | 98,00 | 3,00 | 243,33 | 110,69 | 117,08 |
| OR | | | 99,00 | 3,00 | 304,17 | 138,36 | 146,35 |
| OR | | | 99,50 | 3,00 | 243,33 | 110,69 | 117,08 |
| OR | | | 100,00 | 3,00 | 243,33 | 110,69 | 117,08 |
| OR | | | 101,00 | 3,00 | 945,78 | 467,52 | 494,50 |
| OR | | | 101,50 | 3,00 | 244,18 | 112,02 | 118,49 |
| OR | | | 102,00 | 3,00 | 305,25 | 140,04 | 148,11 |
| OR | | | 103,00 | 3,00 | 305,25 | 140,04 | 148,11 |
| OR | | | 104,00 | 3,00 | 305,25 | 140,04 | 148,11 |
| OR | | | 104,50 | 3,00 | 244,18 | 112,02 | 118,49 |
| OR | | | 105,00 | 3,00 | 244,18 | 112,02 | 118,49 |
| OR | | | 106,00 | 3,00 | 305,25 | 140,04 | 148,11 |
| OR | | | 108,00 | 3,00 | 244,18 | 112,02 | 118,49 |
| OR | | | 109,00 | 3,00 | 305,25 | 140,04 | 148,11 |
| OR | | | 109,50 | 3,00 | 244,18 | 112,02 | 118,49 |
| OR | | | 110,00 | 3,00 | 244,18 | 112,02 | 118,49 |
| OR | | | 111,00 | 3,00 | 957,50 | 524,54 | 554,80 |
| OR | | | 112,00 | 3,00 | 259,50 | 119,06 | 125,93 |
| OR | | | 114,00 | 3,00 | 324,38 | 148,81 | 157,40 |
| OR | | | 114,50 | 3,00 | 259,50 | 119,06 | 125,93 |

| TIPO | RIFERIMENTI USA | RIFERIMENTI UK | d1 mm | d2 mm | LISTINO SILICONE 70 SH 5-2016 € X 100 | LISTINO NBR 90 SH 5-2016 € X 100 | LISTINO EPDM 70 SH 5-2016 € X 100 |
|---|---|---|---|---|---|---|---|
| OR | | | 115,00 | 3,00 | 259,50 | 119,06 | 125,93 |
| OR | | | 116,00 | 3,00 | 324,38 | 148,81 | 157,40 |
| OR | | | 117,00 | 3,00 | 324,38 | 148,81 | 157,40 |
| OR | | | 118,00 | 3,00 | 259,50 | 119,06 | 125,93 |
| OR | | | 119,00 | 3,00 | 957,50 | 524,54 | 554,80 |
| OR | | | 119,50 | 3,00 | 259,50 | 119,06 | 125,93 |
| OR | | | 120,00 | 3,00 | 259,50 | 119,06 | 125,93 |
| OR | | | 122,00 | 3,00 | 282,45 | 129,57 | 137,05 |
| OR | | | 123,00 | 3,00 | 353,04 | 161,96 | 171,31 |
| OR | | | 124,00 | 3,00 | 353,04 | 161,96 | 171,31 |
| OR | | | 124,50 | 3,00 | 282,45 | 129,57 | 137,05 |
| OR | | | 125,00 | 3,00 | 282,45 | 129,57 | 137,05 |
| OR | | | 127,00 | 3,00 | 353,04 | 161,96 | 171,31 |
| OR | | | 128,00 | 3,00 | 282,45 | 129,57 | 137,05 |
| OR | | | 129,00 | 3,00 | 353,04 | 161,96 | 171,31 |
| OR | | | 129,50 | 3,00 | 282,45 | 129,57 | 137,05 |
| OR | | | 130,00 | 3,00 | 282,45 | 129,57 | 137,05 |
| OR | | | 132,00 | 3,00 | 297,65 | 136,54 | 144,41 |
| OR | | | 134,00 | 3,00 | 297,65 | 136,54 | 144,41 |
| OR | | | 134,50 | 3,00 | 297,65 | 136,54 | 144,41 |
| OR | | | 135,00 | 3,00 | 297,65 | 136,54 | 144,41 |
| OR | | | 137,00 | 3,00 | 372,03 | 185,46 | 196,17 |
| OR | | | 138,00 | 3,00 | 297,65 | 136,54 | 144,41 |
| OR | | | 139,00 | 3,00 | 297,65 | 136,54 | 144,41 |
| OR | | | 139,50 | 3,00 | 297,65 | 136,54 | 144,41 |
| OR | | | 140,00 | 3,00 | 297,65 | 136,54 | 144,41 |
| OR | | | 142,00 | 3,00 | 320,62 | 147,08 | 155,57 |
| OR | | | 143,00 | 3,00 | 468,97 | 199,78 | 211,30 |
| OR | | | 144,00 | 3,00 | 320,62 | 147,08 | 155,57 |
| OR | | | 144,50 | 3,00 | 320,62 | 147,08 | 155,57 |
| OR | | | 145,00 | 3,00 | 320,62 | 147,08 | 155,57 |
| OR | | | 146,00 | 3,00 | 468,97 | 199,78 | 211,30 |
| OR | | | 147,00 | 3,00 | 468,97 | 199,78 | 211,30 |
| OR | | | 148,00 | 3,00 | 468,97 | 199,78 | 211,30 |
| OR | | | 149,00 | 3,00 | 468,97 | 199,78 | 211,30 |
| OR | | | 149,50 | 3,00 | 320,62 | 147,08 | 155,57 |
| OR | | | 150,00 | 3,00 | 320,62 | 147,08 | 155,57 |
| OR | | | 4,00 | 4,00 | 26,42 | 12,83 | 13,58 |
| OR | | | 5,00 | 4,00 | 376,99 | 143,43 | 151,71 |
| OR | | | 6,00 | 4,00 | 376,99 | 143,43 | 151,71 |
| OR | | | 7,00 | 4,00 | 29,50 | 14,32 | 15,14 |
| OR | | | 8,00 | 4,00 | 29,50 | 14,32 | 15,14 |
| OR | | | 9,00 | 4,00 | 29,50 | 14,32 | 15,14 |
| OR | | | 10,00 | 4,00 | 23,58 | 11,45 | 12,11 |
| OR | | | 11,00 | 4,00 | 31,48 | 15,29 | 16,17 |
| OR | | | 12,00 | 4,00 | 31,48 | 15,29 | 16,17 |
| OR | | | 13,00 | 4,00 | 39,34 | 19,60 | 20,74 |
| OR | | | 14,00 | 4,00 | 35,04 | 17,47 | 18,48 |
| OR | | | 15,00 | 4,00 | 35,04 | 17,47 | 18,48 |

| TIPO | RIFERIMENTI USA | RIFERIMENTI UK | d1 mm | d2 mm | LISTINO SILICONE 70 SH 5-2016 € X1 00 | LISTINO NBR 90 SH 5-2016 € X 100 | LISTINO EPDM 70 SH 5-2016 € X 100 |
|---|---|---|---|---|---|---|---|
| OR | | | 16,00 | 4,00 | 35,04 | 17,47 | 18,48 |
| OR | | | 17,00 | 4,00 | 60,31 | 28,17 | 29,81 |
| OR | | | 18,00 | 4,00 | 48,25 | 22,54 | 23,84 |
| OR | | | 19,00 | 4,00 | 48,25 | 22,54 | 23,84 |
| OR | | | 20,00 | 4,00 | 48,25 | 22,54 | 23,84 |
| OR | | | 21,00 | 4,00 | 67,70 | 31,58 | 33,41 |
| OR | | | 22,00 | 4,00 | 54,15 | 25,26 | 26,71 |
| OR | | | 23,00 | 4,00 | 59,00 | 27,51 | 29,11 |
| OR | | | 24,00 | 4,00 | 59,00 | 27,51 | 29,11 |
| OR | | | 25,00 | 4,00 | 59,00 | 27,51 | 29,11 |
| OR | | | 26,00 | 4,00 | 74,42 | 34,72 | 36,72 |
| OR | | | 27,00 | 4,00 | 103,70 | 46,35 | 49,03 |
| OR | | | 28,00 | 4,00 | 74,42 | 34,72 | 36,72 |
| OR | | | 29,00 | 4,00 | 103,70 | 46,35 | 49,03 |
| OR | | | 30,00 | 4,00 | 74,42 | 34,72 | 36,72 |
| OR | | | 31,00 | 4,00 | 90,52 | 37,88 | 40,07 |
| OR | | | 32,00 | 4,00 | 90,52 | 37,88 | 40,07 |
| OR | | | 33,00 | 4,00 | 113,15 | 50,59 | 53,52 |
| OR | | | 34,00 | 4,00 | 90,52 | 37,88 | 40,07 |
| OR | | | 35,00 | 4,00 | 90,52 | 37,88 | 40,07 |
| OR | | | 36,00 | 4,00 | 101,83 | 45,54 | 48,17 |
| OR | | | 37,00 | 4,00 | 127,32 | 56,92 | 60,20 |
| OR | | | 38,00 | 4,00 | 101,83 | 45,54 | 48,17 |
| OR | | | 39,00 | 4,00 | 127,32 | 56,92 | 60,20 |
| OR | | | 40,00 | 4,00 | 101,83 | 45,54 | 48,17 |
| OR | | | 41,00 | 4,00 | 550,04 | 307,72 | 325,47 |
| OR | | | 42,00 | 4,00 | 113,15 | 50,59 | 53,52 |
| OR | | | 43,00 | 4,00 | 141,45 | 63,25 | 66,90 |
| OR | | | 44,00 | 4,00 | 113,15 | 50,59 | 53,52 |
| OR | | | 45,00 | 4,00 | 113,15 | 50,59 | 53,52 |
| OR | | | 46,00 | 4,00 | 155,62 | 69,58 | 73,58 |
| OR | | | 47,00 | 4,00 | 124,51 | 55,67 | 58,88 |
| OR | | | 48,00 | 4,00 | 124,51 | 55,67 | 58,88 |
| OR | | | 49,00 | 4,00 | 550,04 | 307,72 | 325,47 |
| OR | | | 50,00 | 4,00 | 124,51 | 55,67 | 58,88 |
| OR | | | 51,00 | 4,00 | 179,51 | 72,93 | 77,14 |
| OR | | | 52,00 | 4,00 | 131,13 | 58,34 | 61,71 |
| OR | | | 53,00 | 4,00 | 179,51 | 72,93 | 77,14 |
| OR | | | 54,00 | 4,00 | 131,13 | 58,34 | 61,71 |
| OR | | | 55,00 | 4,00 | 131,13 | 58,34 | 61,71 |
| OR | | | 56,00 | 4,00 | 145,72 | 64,84 | 68,58 |
| OR | | | 57,00 | 4,00 | 145,72 | 64,84 | 68,58 |
| OR | | | 58,00 | 4,00 | 145,72 | 64,84 | 68,58 |
| OR | | | 59,00 | 4,00 | 199,51 | 81,04 | 85,73 |
| OR | | | 60,00 | 4,00 | 145,72 | 64,84 | 68,58 |
| OR | | | 61,00 | 4,00 | 721,93 | 365,76 | 386,87 |
| OR | | | 62,00 | 4,00 | 219,44 | 99,81 | 105,58 |
| OR | | | 63,00 | 4,00 | 219,44 | 99,81 | 105,58 |
| OR | | | 64,00 | 4,00 | 219,44 | 99,81 | 105,58 |

| TIPO | RIFERIMENTI USA | RIFERIMENTI UK | d1 mm | d2 mm | LISTINO SILICONE 70 SH 5-2016 € X 100 | LISTINO NBR 90 SH 5-2016 € X 100 | LISTINO EPDM 70 SH 5-2016 € X 100 |
|---|---|---|---|---|---|---|---|
| OR | | | 65,00 | 4,00 | 175,55 | 71,32 | 75,44 |
| OR | | | 66,00 | 4,00 | 266,81 | 121,38 | 128,38 |
| OR | | | 67,00 | 4,00 | 213,47 | 97,11 | 102,71 |
| OR | | | 68,00 | 4,00 | 213,47 | 97,11 | 102,71 |
| OR | | | 69,00 | 4,00 | 266,81 | 121,38 | 128,38 |
| OR | | | 70,00 | 4,00 | 213,47 | 97,11 | 102,71 |
| OR | | | 71,00 | 4,00 | 738,38 | 383,19 | 405,30 |
| OR | | | 72,00 | 4,00 | 223,44 | 101,64 | 107,50 |
| OR | | | 73,00 | 4,00 | 738,38 | 383,19 | 405,30 |
| OR | | | 74,00 | 4,00 | 279,26 | 127,03 | 134,37 |
| OR | | | 75,00 | 4,00 | 223,44 | 101,64 | 107,50 |
| OR | | | 76,00 | 4,00 | 294,23 | 133,85 | 141,58 |
| OR | | | 77,00 | 4,00 | 294,23 | 133,85 | 141,58 |
| OR | | | 78,00 | 4,00 | 294,23 | 133,85 | 141,58 |
| OR | | | 80,00 | 4,00 | 235,39 | 107,08 | 113,27 |
| OR | | | 82,00 | 4,00 | 239,36 | 108,88 | 115,16 |
| OR | | | 83,00 | 4,00 | 299,20 | 136,11 | 143,96 |
| OR | | | 84,00 | 4,00 | 239,36 | 108,88 | 115,16 |
| OR | | | 85,00 | 4,00 | 239,36 | 108,88 | 115,16 |
| OR | | | 86,00 | 4,00 | 309,21 | 140,67 | 148,79 |
| OR | | | 87,00 | 4,00 | 309,21 | 140,67 | 148,79 |
| OR | | | 88,00 | 4,00 | 247,37 | 112,53 | 119,03 |
| OR | | | 89,00 | 4,00 | 309,21 | 140,67 | 148,79 |
| OR | | | 90,00 | 4,00 | 247,37 | 112,53 | 119,03 |
| OR | | | 91,00 | 4,00 | 369,08 | 183,97 | 194,58 |
| OR | | | 92,00 | 4,00 | 295,29 | 134,33 | 142,08 |
| OR | | | 93,00 | 4,00 | 369,08 | 183,97 | 194,58 |
| OR | | | 94,00 | 4,00 | 369,08 | 183,97 | 194,58 |
| OR | | | 95,00 | 4,00 | 295,29 | 134,33 | 142,08 |
| OR | | | 96,00 | 4,00 | 295,29 | 134,33 | 142,08 |
| OR | | | 97,00 | 4,00 | 369,08 | 183,97 | 194,58 |
| OR | | | 98,00 | 4,00 | 369,08 | 183,97 | 194,58 |
| OR | | | 100,00 | 4,00 | 295,29 | 134,33 | 142,08 |
| OR | | | 102,00 | 4,00 | 309,12 | 141,82 | 150,00 |
| OR | | | 104,00 | 4,00 | 386,39 | 192,62 | 203,74 |
| OR | | | 105,00 | 4,00 | 309,12 | 141,82 | 150,00 |
| OR | | | 106,00 | 4,00 | 386,39 | 192,62 | 203,74 |
| OR | | | 107,00 | 4,00 | 386,39 | 192,62 | 203,74 |
| OR | | | 108,00 | 4,00 | 309,12 | 141,82 | 150,00 |
| OR | | | 109,00 | 4,00 | 1.068,19 | 499,05 | 527,84 |
| OR | | | 110,00 | 4,00 | 309,12 | 141,82 | 150,00 |
| OR | | | 112,00 | 4,00 | 337,31 | 154,75 | 163,68 |
| OR | | | 113,00 | 4,00 | 493,39 | 210,18 | 222,31 |
| OR | | | 114,00 | 4,00 | 493,39 | 210,18 | 222,31 |
| OR | | | 115,00 | 4,00 | 337,31 | 154,75 | 163,68 |
| OR | | | 116,00 | 4,00 | 493,39 | 210,18 | 222,31 |
| OR | | | 117,00 | 4,00 | 493,39 | 210,18 | 222,31 |
| OR | | | 118,00 | 4,00 | 337,31 | 154,75 | 163,68 |
| OR | | | 119,00 | 4,00 | 493,39 | 210,18 | 222,31 |

| TIPO | RIFERIMENTI USA | RIFERIMENTI UK | d1 mm | d2 mm | LISTINO SILICONE 70 SH 5-2016 € X1 00 | LISTINO NBR 90 SH 5-2016 € X 100 | LISTINO EPDM 70 SH 5-2016 € X 100 |
|---|---|---|---|---|---|---|---|
| OR | | | 120,00 | 4,00 | 337,31 | 154,75 | 163,68 |
| OR | | | 122,00 | 4,00 | 366,78 | 182,84 | 193,40 |
| OR | | | 124,00 | 4,00 | 366,78 | 182,84 | 193,40 |
| OR | | | 125,00 | 4,00 | 366,78 | 182,84 | 193,40 |
| OR | | | 126,00 | 4,00 | 366,78 | 182,84 | 193,40 |
| OR | | | 127,00 | 4,00 | 536,54 | 228,55 | 241,74 |
| OR | | | 128,00 | 4,00 | 366,78 | 182,84 | 193,40 |
| OR | | | 129,00 | 4,00 | 536,54 | 228,55 | 241,74 |
| OR | | | 130,00 | 4,00 | 366,78 | 182,84 | 193,40 |
| OR | | | 131,00 | 4,00 | 593,98 | 253,04 | 267,63 |
| OR | | | 132,00 | 4,00 | 475,20 | 202,43 | 214,11 |
| OR | | | 133,00 | 4,00 | 593,98 | 253,04 | 267,63 |
| OR | | | 134,00 | 4,00 | 593,98 | 253,04 | 267,63 |
| OR | | | 135,00 | 4,00 | 475,20 | 202,43 | 214,11 |
| OR | | | 136,00 | 4,00 | 593,98 | 253,04 | 267,63 |
| OR | | | 137,00 | 4,00 | 593,98 | 253,04 | 267,63 |
| OR | | | 138,00 | 4,00 | 475,20 | 202,43 | 214,11 |
| OR | | | 139,00 | 4,00 | 593,98 | 253,04 | 267,63 |
| OR | | | 140,00 | 4,00 | 475,20 | 202,43 | 214,11 |
| OR | | | 142,00 | 4,00 | 494,40 | 210,60 | 222,74 |
| OR | | | 143,00 | 4,00 | 617,95 | 263,23 | 278,42 |
| OR | | | 144,00 | 4,00 | 494,40 | 210,60 | 222,74 |
| OR | | | 145,00 | 4,00 | 494,40 | 210,60 | 222,74 |
| OR | | | 146,00 | 4,00 | 494,40 | 210,60 | 222,74 |
| OR | | | 147,00 | 4,00 | 617,95 | 263,23 | 278,42 |
| OR | | | 148,00 | 4,00 | 1.333,24 | 698,62 | 738,94 |
| OR | | | 150,00 | 4,00 | 494,40 | 210,60 | 222,74 |
| OR | | | 4,00 | 5,00 | 45,07 | 21,07 | 22,28 |
| OR | | | 5,00 | 5,00 | 45,07 | 21,07 | 22,28 |
| OR | | | 6,00 | 5,00 | 45,07 | 21,07 | 22,28 |
| OR | | | 7,00 | 5,00 | 45,07 | 21,07 | 22,28 |
| OR | | | 8,00 | 5,00 | 45,07 | 21,07 | 22,28 |
| OR | | | 9,00 | 5,00 | 457,83 | 152,46 | 161,25 |
| OR | | | 10,00 | 5,00 | 33,79 | 16,41 | 17,35 |
| OR | | | 11,00 | 5,00 | 501,67 | 227,40 | 240,52 |
| OR | | | 12,00 | 5,00 | 51,61 | 24,12 | 25,52 |
| OR | | | 13,00 | 5,00 | 51,61 | 24,12 | 25,52 |
| OR | | | 14,00 | 5,00 | 61,02 | 28,51 | 30,16 |
| OR | | | 15,00 | 5,00 | 48,81 | 22,81 | 24,12 |
| OR | | | 16,00 | 5,00 | 61,02 | 28,51 | 30,16 |
| OR | | | 17,00 | 5,00 | 89,68 | 37,22 | 39,38 |
| OR | | | 18,00 | 5,00 | 63,72 | 29,78 | 31,50 |
| OR | | | 19,00 | 5,00 | 501,67 | 227,40 | 240,52 |
| OR | | | 20,00 | 5,00 | 63,72 | 227,40 | 240,52 |
| OR | | | 21,00 | 5,00 | 108,87 | 48,67 | 51,48 |
| OR | | | 22,00 | 5,00 | 78,16 | 36,46 | 38,56 |
| OR | | | 23,00 | 5,00 | 108,87 | 48,67 | 51,48 |
| OR | | | 24,00 | 5,00 | 78,16 | 36,46 | 38,56 |
| OR | | | 25,00 | 5,00 | 78,16 | 36,46 | 38,56 |

| TIPO | RIFERIMENTI USA | RIFERIMENTI UK | d1 mm | d2 mm | LISTINO SILICONE 70 SH 5-2016 € X 100 | LISTINO NBR 90 SH 5-2016 € X 100 | LISTINO EPDM 70 SH 5-2016 € X 100 |
|---|---|---|---|---|---|---|---|
| OR | | | 26,00 | 5,00 | 140,10 | 62,63 | 66,24 |
| OR | | | 27,00 | 5,00 | 140,10 | 62,63 | 66,24 |
| OR | | | 28,00 | 5,00 | 140,10 | 62,63 | 66,24 |
| OR | | | 29,00 | 5,00 | 552,22 | 250,96 | 265,44 |
| OR | | | 30,00 | 5,00 | 112,09 | 50,12 | 53,00 |
| OR | | | 31,00 | 5,00 | 150,89 | 67,46 | 71,35 |
| OR | | | 32,00 | 5,00 | 120,73 | 53,97 | 57,08 |
| OR | | | 33,00 | 5,00 | 120,73 | 53,97 | 57,08 |
| OR | | | 34,00 | 5,00 | 597,66 | 67,46 | 71,35 |
| OR | | | 35,00 | 5,00 | 120,73 | 66,39 | 70,22 |
| OR | | | 36,00 | 5,00 | 124,51 | 55,67 | 58,88 |
| OR | | | 37,00 | 5,00 | 155,62 | 69,58 | 73,58 |
| OR | | | 38,00 | 5,00 | 124,51 | == | == |
| OR | | | 39,00 | 5,00 | 155,62 | 69,58 | 73,58 |
| OR | | | 40,00 | 5,00 | 124,51 | 55,67 | 58,88 |
| OR | | | 41,00 | 5,00 | 182,10 | 73,76 | 78,03 |
| OR | | | 42,00 | 5,00 | 132,00 | 59,01 | 62,42 |
| OR | | | 43,00 | 5,00 | 182,10 | 73,76 | 78,03 |
| OR | | | 44,00 | 5,00 | 182,10 | 73,76 | 78,03 |
| OR | | | 45,00 | 5,00 | 132,00 | 59,01 | 62,42 |
| OR | | | 46,00 | 5,00 | 154,68 | 69,15 | 73,14 |
| OR | | | 47,00 | 5,00 | 154,68 | 69,15 | 73,14 |
| OR | | | 48,00 | 5,00 | 615,62 | 354,14 | 374,57 |
| OR | | | 50,00 | 5,00 | 154,68 | 69,15 | 73,14 |
| OR | | | 51,00 | 5,00 | 219,44 | 99,81 | 105,58 |
| OR | | | 52,00 | 5,00 | 219,44 | 99,81 | 105,58 |
| OR | | | 53,00 | 5,00 | 219,44 | 99,81 | 105,58 |
| OR | | | 54,00 | 5,00 | 219,44 | 99,81 | 105,58 |
| OR | | | 55,00 | 5,00 | 175,55 | 71,32 | 75,44 |
| OR | | | 56,00 | 5,00 | 264,35 | 120,25 | 127,19 |
| OR | | | 57,00 | 5,00 | 264,35 | 120,25 | 127,19 |
| OR | | | 58,00 | 5,00 | 264,35 | 120,25 | 127,19 |
| OR | | | 59,00 | 5,00 | 264,35 | 120,25 | 127,19 |
| OR | | | 60,00 | 5,00 | 211,46 | 96,19 | 101,75 |
| OR | | | 61,00 | 5,00 | 309,21 | 140,67 | 148,79 |
| OR | | | 62,00 | 5,00 | 247,37 | 112,53 | 119,03 |
| OR | | | 63,00 | 5,00 | 309,21 | 140,67 | 148,79 |
| OR | | | 64,00 | 5,00 | 309,21 | 140,67 | 148,79 |
| OR | | | 65,00 | 5,00 | 247,37 | 112,53 | 119,03 |
| OR | | | 66,00 | 5,00 | 319,14 | 145,18 | 153,56 |
| OR | | | 67,00 | 5,00 | 319,14 | 145,18 | 153,56 |
| OR | | | 68,00 | 5,00 | 319,14 | 145,18 | 153,56 |
| OR | | | 69,00 | 5,00 | 319,14 | 145,18 | 153,56 |
| OR | | | 70,00 | 5,00 | 255,28 | 116,13 | 122,83 |
| OR | | | 71,00 | 5,00 | 329,11 | 149,72 | 158,35 |
| OR | | | 72,00 | 5,00 | 329,11 | 149,72 | 158,35 |
| OR | | | 73,00 | 5,00 | 329,11 | 149,72 | 158,35 |
| OR | | | 74,00 | 5,00 | 1.009,11 | 486,44 | 514,51 |
| OR | | | 75,00 | 5,00 | 263,30 | 119,78 | 126,70 |

| TIPO | RIFERIMENTI USA | RIFERIMENTI UK | d1 mm | d2 mm | LISTINO SILICONE 70 SH 5-2016 € X1 00 | LISTINO NBR 90 SH 5-2016 € X 100 | LISTINO EPDM 70 SH 5-2016 € X 100 |
|---|---|---|---|---|---|---|---|
| OR | | | 76,00 | 5,00 | 339,11 | 154,27 | 163,17 |
| OR | | | 77,00 | 5,00 | 339,11 | 154,27 | 163,17 |
| OR | | | 78,00 | 5,00 | 339,11 | 154,27 | 163,17 |
| OR | | | 79,00 | 5,00 | == | 154,27 | 163,17 |
| OR | | | 80,00 | 5,00 | 271,31 | 123,41 | 130,54 |
| OR | | | 81,00 | 5,00 | 1.052,29 | 530,76 | 561,37 |
| OR | | | 82,00 | 5,00 | 346,32 | 157,54 | 166,63 |
| OR | | | 83,00 | 5,00 | 1.052,29 | 530,76 | 561,37 |
| OR | | | 84,00 | 5,00 | 346,32 | 157,54 | 166,63 |
| OR | | | 85,00 | 5,00 | 277,07 | 126,04 | 133,31 |
| OR | | | 86,00 | 5,00 | 1.052,29 | 530,76 | 561,37 |
| OR | | | 87,00 | 5,00 | 359,04 | 163,33 | 172,75 |
| OR | | | 88,00 | 5,00 | 359,04 | 163,33 | 172,75 |
| OR | | | 89,00 | 5,00 | 1.052,29 | 530,76 | 561,37 |
| OR | | | 90,00 | 5,00 | 287,23 | 130,67 | 138,21 |
| OR | | | 92,00 | 5,00 | 1.242,05 | 581,23 | 614,76 |
| OR | | | 93,00 | 5,00 | 515,18 | 218,74 | 231,37 |
| OR | | | 94,00 | 5,00 | 515,18 | 218,74 | 231,37 |
| OR | | | 95,00 | 5,00 | 351,06 | 159,71 | 168,92 |
| OR | | | 96,00 | 5,00 | 1.242,05 | 581,23 | 614,76 |
| OR | | | 97,00 | 5,00 | 515,18 | 218,74 | 231,37 |
| OR | | | 98,00 | 5,00 | 351,06 | 159,71 | 168,92 |
| OR | | | 99,00 | 5,00 | 1.242,05 | 581,23 | 614,76 |
| OR | | | 100,00 | 5,00 | 351,06 | 159,71 | 168,92 |
| BRITISH STD METRIC BS 4518 - JAPANESE STD JIS 240 P+G - SWEDISH STD SMS 1586 | | | | | | | |
| OR | | | 44,20 | 5,70 | 147,17 | 65,80 | 69,60 |
| OR | | | 44,30 | 5,70 | 147,17 | 82,24 | 86,99 |
| OR | | | 45,20 | 5,70 | 187,30 | 75,87 | 80,25 |
| OR | | | 45,30 | 5,70 | 187,30 | 105,67 | 111,77 |
| OR | | | 49,20 | 5,70 | 187,30 | 75,87 | 80,25 |
| OR | | | 49,30 | 5,70 | 187,30 | 105,67 | 111,77 |
| OR | | | 52,20 | 5,70 | 195,50 | 79,42 | 84,00 |
| OR | | | 52,30 | 5,70 | 195,50 | 111,16 | 117,57 |
| OR | | | 54,20 | 5,70 | 195,50 | 79,42 | 84,00 |
| OR | | | 54,30 | 5,70 | 195,50 | 111,16 | 117,57 |
| OR | | | 55,20 | 5,70 | 235,65 | 134,01 | 141,73 |
| OR | | | 55,30 | 5,70 | 235,65 | 134,01 | 141,73 |
| OR | | | 59,20 | 5,70 | 235,65 | 107,20 | 113,38 |
| OR | | | 59,30 | 5,70 | 235,65 | 134,01 | 141,73 |
| OR | | | 62,20 | 5,70 | 271,31 | 123,41 | 130,54 |
| OR | | | 62,30 | 5,70 | 271,31 | 123,41 | 130,54 |
| OR | | | 64,20 | 5,70 | 271,31 | 123,41 | 130,54 |
| OR | | | 64,30 | 5,70 | 271,31 | 123,41 | 130,54 |
| OR | | | 69,00 | 5,70 | 349,12 | 158,83 | 167,98 |
| OR | | | 69,20 | 5,70 | 279,30 | 127,06 | 134,40 |
| OR | | | 69,30 | 5,70 | 279,30 | 127,06 | 134,40 |
| OR | | | 74,00 | 5,70 | 369,08 | 183,97 | 194,58 |
| OR | | | 74,20 | 5,70 | 295,29 | 134,33 | 142,08 |
| OR | | | 74,30 | 5,70 | 295,29 | 134,33 | 142,08 |

| TIPO | RIFERIMENTI USA | RIFERIMENTI UK | d1 mm | d2 mm | LISTINO SILICONE 70 SH 5-2016 € X 100 | LISTINO NBR 90 SH 5-2016 € X 100 | LISTINO EPDM 70 SH 5-2016 € X 100 |
|---|---|---|---|---|---|---|---|
| OR | | | 79,00 | 5,70 | 393,98 | 196,37 | 207,71 |
| OR | | | 79,20 | 5,70 | 315,18 | 143,38 | 151,65 |
| OR | | | 79,30 | 5,70 | 315,18 | 143,38 | 151,65 |
| OR | | | 81,20 | 5,70 | 485,90 | 206,31 | 218,20 |
| OR | | | 84,00 | 5,70 | 485,90 | 206,31 | 218,20 |
| OR | | | 84,20 | 5,70 | 331,14 | 150,65 | 159,34 |
| OR | | | 84,30 | 5,70 | 331,14 | 150,65 | 159,34 |
| OR | | | 89,00 | 5,70 | 534,30 | 226,86 | 239,94 |
| OR | | | 89,20 | 5,70 | 364,14 | 181,49 | 191,95 |
| OR | | | 89,30 | 5,70 | 364,14 | 181,49 | 191,95 |
| OR | | | 92,20 | 5,70 | 603,01 | 256,03 | 270,79 |
| OR | | | 94,00 | 5,70 | 603,01 | 256,03 | 270,79 |
| OR | | | 94,20 | 5,70 | 482,37 | 204,80 | 216,63 |
| OR | | | 94,30 | 5,70 | 482,37 | 204,80 | 216,63 |
| OR | | | 99,00 | 5,70 | 603,01 | 256,03 | 270,79 |
| OR | | | 99,20 | 5,70 | 482,37 | 204,80 | 216,63 |
| OR | | | 104,00 | 5,70 | 608,49 | 259,22 | 274,17 |
| OR | | | 104,20 | 5,70 | 486,81 | 207,37 | 219,34 |
| OR | | | 104,30 | 5,70 | 486,81 | 207,37 | 219,34 |
| OR | | | 109,00 | 5,70 | 608,49 | 259,22 | 274,17 |
| OR | | | 109,20 | 5,70 | 486,81 | 207,37 | 219,34 |
| OR | | | 109,30 | 5,70 | 486,81 | 207,37 | 219,34 |
| OR | | | 114,00 | 5,70 | 675,48 | 287,75 | 304,35 |
| OR | | | 114,20 | 5,70 | 540,40 | 230,20 | 243,48 |
| OR | | | 114,30 | 5,70 | 540,40 | 230,20 | 243,48 |
| OR | | | 119,00 | 5,70 | 675,48 | 287,75 | 304,35 |
| OR | | | 119,20 | 5,70 | 540,40 | 230,20 | 243,48 |
| OR | | | 119,30 | 5,70 | 540,40 | 230,20 | 243,48 |
| OR | | | 124,00 | 5,70 | 703,40 | 299,63 | 316,92 |
| OR | | | 124,20 | 5,70 | 562,72 | 239,71 | 253,53 |
| OR | | | 124,30 | 5,70 | 562,72 | 239,71 | 253,53 |
| OR | | | 129,20 | 5,70 | 562,72 | 239,71 | 253,53 |
| OR | | | 129,30 | 5,70 | 562,72 | 239,71 | 253,53 |
| OR | | | 134,20 | 5,70 | 607,36 | 258,73 | 273,67 |
| OR | | | 134,30 | 5,70 | 607,36 | 258,73 | 273,67 |
| OR | | | 139,20 | 5,70 | 607,36 | 258,73 | 273,67 |
| OR | | | 139,30 | 5,70 | 607,36 | 258,73 | 273,67 |
| OR | | | 144,20 | 5,70 | 635,51 | 270,72 | 286,34 |
| OR | | | 144,30 | 5,70 | 635,51 | 270,72 | 286,34 |
| OR | | | 149,20 | 5,70 | 635,51 | 270,72 | 286,34 |
| OR | | | 149,30 | 5,70 | 635,51 | 270,72 | 286,34 |
| OR | | | 154,20 | 5,70 | 739,70 | 319,58 | 338,03 |
| OR | | | 154,30 | 5,70 | 739,70 | 319,58 | 338,03 |
| OR | | | 159,20 | 5,70 | 739,70 | 319,58 | 338,03 |
| OR | | | 159,30 | 5,70 | 739,70 | 319,58 | 338,03 |
| OR | | | 164,20 | 5,70 | 907,15 | 376,56 | 398,28 |
| OR | | | 164,30 | 5,70 | 907,15 | 376,56 | 398,28 |
| OR | | | 169,20 | 5,70 | 907,15 | 376,56 | 398,28 |
| OR | | | 169,30 | 5,70 | 907,15 | 376,56 | 398,28 |

| TIPO | RIFERIMENTI USA | RIFERIMENTI UK | d1 mm | d2 mm | LISTINO SILICONE 70 SH 5-2016 € X1 00 | LISTINO NBR 90 SH 5-2016 € X 100 | LISTINO EPDM 70 SH 5-2016 € X 100 |
|---|---|---|---|---|---|---|---|
| OR | | | 174,20 | 5,70 | 1.057,50 | 506,27 | 535,47 |
| OR | | | 174,30 | 5,70 | 1.057,50 | 506,27 | 535,47 |
| OR | | | 179,20 | 5,70 | 1.057,50 | 506,27 | 535,47 |
| OR | | | 179,30 | 5,70 | 1.057,50 | 506,27 | 535,47 |
| OR | | | 184,20 | 5,70 | 1.207,96 | 578,29 | 611,66 |
| OR | | | 184,30 | 5,70 | 1.207,96 | 578,29 | 611,66 |
| OR | | | 189,20 | 5,70 | 1.207,96 | 578,29 | 611,66 |
| OR | | | 189,30 | 5,70 | 1.207,96 | 578,29 | 611,66 |
| OR | | | 194,20 | 5,70 | 1.283,16 | 614,29 | 649,73 |
| OR | | | 194,30 | 5,70 | 1.283,16 | 614,29 | 649,73 |
| OR | | | 199,20 | 5,70 | 1.283,16 | 614,29 | 649,73 |
| OR | | | 199,30 | 5,70 | 1.283,16 | 614,29 | 649,73 |
| OR | | | 209,20 | 5,70 | 1.280,97 | 625,22 | 661,28 |
| OR | | | 209,30 | 5,70 | 1.280,97 | 625,22 | 661,28 |
| OR | | | 219,20 | 5,70 | 1.356,85 | 662,26 | 700,46 |
| OR | | | 219,30 | 5,70 | 1.356,85 | 662,26 | 700,46 |
| OR | | | 229,20 | 5,70 | 1.417,33 | 691,77 | 731,68 |
| OR | | | 229,30 | 5,70 | 1.417,33 | 715,45 | 756,73 |
| OR | | | 239,20 | 5,70 | 1.491,08 | 727,76 | 769,75 |
| OR | | | 239,30 | 5,70 | 1.491,08 | 928,86 | 982,45 |
| OR | | | 249,20 | 5,70 | 1.528,09 | 745,83 | 788,87 |
| OR | | | 249,30 | 5,70 | 1.528,09 | 788,54 | 834,02 |
| OR | | | 259,20 | 5,70 | 1.565,16 | 763,92 | 807,99 |
| OR | | | 259,30 | 5,70 | 1.565,16 | 763,92 | 807,99 |
| OR | | | 269,20 | 5,70 | 2.013,93 | 778,01 | 822,91 |
| OR | | | 269,30 | 5,70 | 2.013,93 | 778,01 | 822,91 |
| OR | | | 279,20 | 5,70 | 2.065,91 | 798,10 | 844,14 |
| OR | | | 279,30 | 5,70 | 2.065,91 | 798,10 | 844,14 |
| OR | | | 289,20 | 5,70 | 2.130,66 | 823,14 | 870,61 |
| OR | | | 289,30 | 5,70 | 2.130,66 | 823,14 | 870,61 |
| OR | | | 299,20 | 5,70 | 2.168,24 | 855,29 | 904,64 |
| OR | | | 299,30 | 5,70 | 2.168,24 | 855,29 | 904,64 |
| OR | | | 319,20 | 5,70 | 2.305,53 | 940,29 | 994,54 |
| OR | | | 319,30 | 5,70 | 2.305,53 | 940,29 | 994,54 |
| OR | | | 329,30 | 5,70 | 6.248,06 | 2.545,39 | 2.692,24 |
| OR | | | 339,20 | 5,70 | 2.538,57 | 1.035,34 | 1.095,07 |
| OR | | | 339,30 | 5,70 | 2.538,57 | 1.035,34 | 1.095,07 |
| OR | | | 359,20 | 5,70 | 2.862,88 | 1.167,61 | 1.234,97 |
| OR | | | 359,30 | 5,70 | 2.862,88 | 1.167,61 | 1.234,97 |
| OR | | | 379,20 | 5,70 | 3.191,30 | 1.301,55 | 1.376,64 |
| OR | | | 379,30 | 5,70 | 3.191,30 | 1.301,55 | 1.376,64 |
| OR | | | 399,20 | 5,70 | 3.249,55 | 1.325,32 | 1.401,77 |
| OR | | | 399,30 | 5,70 | 3.249,55 | 1.325,32 | 1.401,77 |
| OR | | | 419,20 | 5,70 | 3.014,21 | 1.276,70 | 1.350,36 |
| OR | | | 419,30 | 5,70 | 3.014,21 | 1.276,70 | 1.350,36 |
| OR | | | 439,20 | 5,70 | == | 3.433,06 | 3.631,12 |
| OR | | | 439,30 | 5,70 | == | 3.433,06 | 3.631,12 |
| OR | | | 459,20 | 5,70 | == | 3.596,95 | 3.804,47 |
| OR | | | 459,30 | 5,70 | == | 3.596,95 | 3.804,47 |

| TIPO | RIFERIMENTI USA | RIFERIMENTI UK | d1 mm | d2 mm | LISTINO SILICONE 70 SH 5-2016 € X 100 | LISTINO NBR 90 SH 5-2016 € X 100 | LISTINO EPDM 70 SH 5-2016 € X 100 |
|---|---|---|---|---|---|---|---|
| OR | | | 479,20 | 5,70 | == | 3.735,02 | 3.950,50 |
| OR | | | 479,30 | 5,70 | == | 3.735,02 | 3.950,50 |
| OR | | | 499,20 | 5,70 | == | 2.590,08 | 2.739,52 |
| OR | | | 499,30 | 5,70 | == | 2.590,08 | 2.739,52 |
| | | | METRIC STANDARD | | | | |
| OR | | | 6,00 | 6,00 | 510,23 | 239,71 | 253,53 |
| OR | | | 7,00 | 6,00 | 510,23 | 239,71 | 253,53 |
| OR | | | 9,00 | 6,00 | 74,91 | 35,00 | 37,02 |
| OR | | | 10,00 | 6,00 | 74,91 | 35,00 | 37,02 |
| OR | | | 11,00 | 6,00 | 563,14 | 262,93 | 278,10 |
| OR | | | 12,00 | 6,00 | 563,14 | 262,93 | 278,10 |
| OR | | | 13,00 | 6,00 | 94,24 | 39,13 | 41,39 |
| OR | | | 14,00 | 6,00 | 94,24 | 39,13 | 41,39 |
| OR | | | 15,00 | 6,00 | 94,24 | 39,13 | 41,39 |
| OR | | | 16,00 | 6,00 | 94,24 | 39,13 | 41,39 |
| OR | | | 18,00 | 6,00 | 563,14 | 262,93 | 278,10 |
| OR | | | 19,00 | 6,00 | 104,74 | 46,38 | 49,06 |
| OR | | | 19,50 | 6,00 | 563,14 | 262,93 | 278,10 |
| OR | | | 20,00 | 6,00 | 104,74 | 46,38 | 49,06 |
| OR | | | 21,00 | 6,00 | 124,39 | 55,62 | 58,82 |
| OR | | | 22,00 | 6,00 | 124,39 | 55,62 | 58,82 |
| OR | | | 23,00 | 6,00 | 124,39 | 55,62 | 58,82 |
| OR | | | 23,50 | 6,00 | 124,39 | 55,62 | 58,82 |
| OR | | | 24,00 | 6,00 | 124,39 | 55,62 | 58,82 |
| OR | | | 25,00 | 6,00 | 124,39 | 55,62 | 58,82 |
| OR | | | 26,00 | 6,00 | 155,57 | 69,56 | 73,57 |
| OR | | | 27,00 | 6,00 | 155,57 | 69,56 | 73,57 |
| OR | | | 28,00 | 6,00 | 155,57 | 69,56 | 73,57 |
| OR | | | 29,00 | 6,00 | 155,57 | 69,56 | 73,57 |
| OR | | | 30,00 | 6,00 | 155,57 | 69,56 | 73,57 |
| OR | | | 31,00 | 6,00 | 187,32 | 75,88 | 80,26 |
| OR | | | 32,00 | 6,00 | 187,32 | 75,88 | 80,26 |
| OR | | | 33,00 | 6,00 | 187,32 | 75,88 | 80,26 |
| OR | | | 34,00 | 6,00 | 187,32 | 75,88 | 80,26 |
| OR | | | 35,00 | 6,00 | 187,32 | 75,88 | 80,26 |
| OR | | | 36,00 | 6,00 | 192,54 | 78,00 | 82,50 |
| OR | | | 37,00 | 6,00 | 738,38 | 336,71 | 356,14 |
| OR | | | 38,00 | 6,00 | 192,54 | 78,00 | 82,50 |
| OR | | | 39,00 | 6,00 | 192,54 | 78,00 | 82,50 |
| OR | | | 40,00 | 6,00 | 192,54 | 78,00 | 82,50 |
| OR | | | 41,00 | 6,00 | 203,03 | 82,24 | 86,99 |
| OR | | | 42,00 | 6,00 | 203,03 | 82,24 | 86,99 |
| OR | | | 43,00 | 6,00 | 203,03 | 82,24 | 86,99 |
| OR | | | 44,00 | 6,00 | 203,03 | 82,24 | 86,99 |
| OR | | | 44,50 | 6,00 | 1.003,45 | 400,59 | 423,69 |
| OR | | | 45,00 | 6,00 | 203,03 | 82,24 | 86,99 |
| OR | | | 46,00 | 6,00 | 234,11 | 105,67 | 111,77 |
| OR | | | 47,00 | 6,00 | 234,11 | 105,67 | 111,77 |
| OR | | | 48,00 | 6,00 | 234,11 | 105,67 | 111,77 |

| TIPO | RIFERIMENTI USA | RIFERIMENTI UK | d1 mm | d2 mm | LISTINO SILICONE 70 SH 5-2016 € X1 00 | LISTINO NBR 90 SH 5-2016 € X 100 | LISTINO EPDM 70 SH 5-2016 € X 100 |
|---|---|---|---|---|---|---|---|
| OR | | | 49,00 | 6,00 | 234,11 | 105,67 | 111,77 |
| OR | | | 50,00 | 6,00 | 234,11 | 105,67 | 111,77 |
| OR | | | 51,00 | 6,00 | 1.052,29 | 486,44 | 514,51 |
| OR | | | 52,00 | 6,00 | 1.052,29 | 486,44 | 514,51 |
| OR | | | 53,00 | 6,00 | 244,37 | 111,16 | 117,57 |
| OR | | | 54,00 | 6,00 | 244,37 | 111,16 | 117,57 |
| OR | | | 55,00 | 6,00 | 244,37 | 111,16 | 117,57 |
| OR | | | 56,00 | 6,00 | 294,55 | 134,01 | 141,73 |
| OR | | | 57,00 | 6,00 | 294,55 | 134,01 | 141,73 |
| OR | | | 58,00 | 6,00 | 294,55 | 134,01 | 141,73 |
| OR | | | 59,00 | 6,00 | 294,55 | 134,01 | 141,73 |
| OR | | | 59,50 | 6,00 | 1.052,29 | 486,44 | 514,51 |
| OR | | | 60,00 | 6,00 | 294,55 | 134,01 | 141,73 |
| OR | | | 61,00 | 6,00 | 1.131,76 | 518,06 | 547,95 |
| OR | | | 62,00 | 6,00 | 339,11 | 154,27 | 163,17 |
| OR | | | 63,00 | 6,00 | 339,11 | 154,27 | 163,17 |
| OR | | | 64,00 | 6,00 | 339,11 | 154,27 | 163,17 |
| OR | | | 65,00 | 6,00 | 339,11 | 154,27 | 163,17 |
| OR | | | 66,00 | 6,00 | 349,12 | 158,83 | 167,98 |
| OR | | | 67,00 | 6,00 | 1.131,76 | 518,06 | 547,95 |
| OR | | | 68,00 | 6,00 | 349,12 | 158,83 | 167,98 |
| OR | | | 69,00 | 6,00 | 349,12 | 158,83 | 167,98 |
| OR | | | 70,00 | 6,00 | 349,12 | 158,83 | 167,98 |
| OR | | | 72,00 | 6,00 | 369,08 | 183,97 | 194,58 |
| OR | | | 74,00 | 6,00 | 369,08 | 183,97 | 194,58 |
| OR | | | 75,00 | 6,00 | 369,08 | 183,97 | 194,58 |
| OR | | | 76,00 | 6,00 | 393,98 | 196,37 | 207,71 |
| OR | | | 78,00 | 6,00 | 393,98 | 196,37 | 207,71 |
| OR | | | 79,00 | 6,00 | 393,98 | 196,37 | 207,71 |
| OR | | | 80,00 | 6,00 | 393,98 | 196,37 | 207,71 |
| OR | | | 81,00 | 6,00 | 485,90 | 206,31 | 218,20 |
| OR | | | 84,00 | 6,00 | 1.427,01 | 563,48 | 595,98 |
| OR | | | 85,00 | 6,00 | 1.427,01 | 563,48 | 595,98 |
| OR | | | 86,00 | 6,00 | 534,30 | 226,86 | 239,94 |
| OR | | | 88,00 | 6,00 | 534,30 | 226,86 | 239,94 |
| OR | | | 90,00 | 6,00 | 534,30 | 226,86 | 239,94 |
| OR | | | 92,00 | 6,00 | 1.481,95 | 625,46 | 661,55 |
| OR | | | 93,00 | 6,00 | 603,01 | 256,03 | 270,79 |
| OR | | | 95,00 | 6,00 | 603,01 | 256,03 | 270,79 |
| OR | | | 96,00 | 6,00 | 603,01 | 256,03 | 270,79 |
| OR | | | 98,00 | 6,00 | 603,01 | 256,03 | 270,79 |
| OR | | | 99,00 | 6,00 | 1.481,95 | 625,46 | 661,55 |
| OR | | | 100,00 | 6,00 | 603,01 | 256,03 | 270,79 |

Consultate i nostri uffici commerciali
per misure e prezzi non indicati

# Rondelle in rame

RAME - KU

FLR

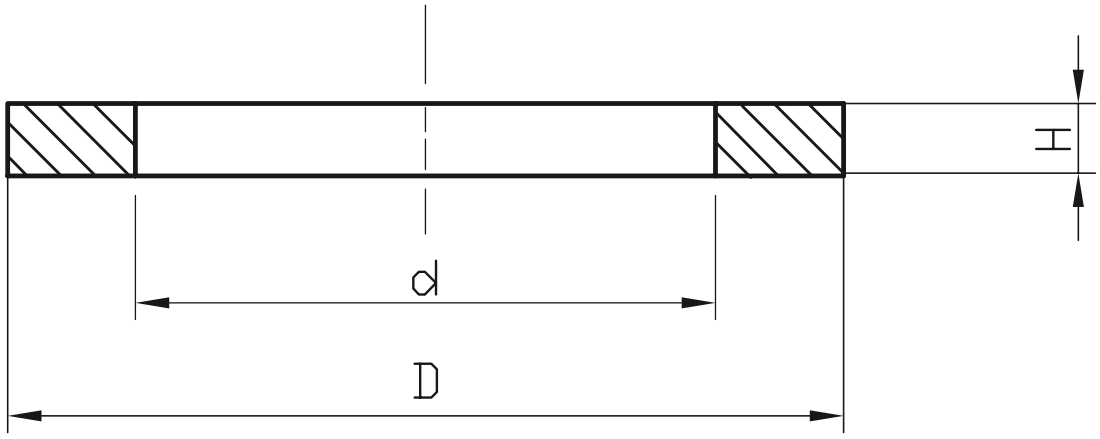
H
d
D

| CODICE | TIPO | MAT. | RIF. MISURA | d mm | D mm | H mm | CONFEZIONAMENTO | LISTINO 5-2016 x100 € |
|---|---|---|---|---|---|---|---|---|
| 515609 | FLR | RAME - KU | G 1/8 | 10 | 16 | 1,5 | 100 | 21,39 |
| 515610 | FLR | RAME - KU | G 1/4 | 13,5 | 18 | 1,5 | 100 | 23,23 |
| 515611 | FLR | RAME - KU | G 1/4 | 13,5 | 19 | 1,5 | 100 | 25,06 |
| 515612 | FLR | RAME - KU | G 3/8 | 17 | 22 | 1,5 | 100 | 31,68 |
| 515613 | FLR | RAME - KU | G 1/2 | 21,5 | 27 | 1,5 | 100 | 43,60 |
| 515614 | FLR | RAME - KU | G 3/4 | 27 | 33 | 1,5 | 100 | 65,71 |
| 515615 | FLR | RAME - KU | G 1 | 33,5 | 40 | 1,5 | 100 | 96,07 |
| 515616 | FLR | RAME - KU | G 1 1/4 | 42 | 50 | 1,5 | 100 | 149,76 |
| 515617 | FLR | RAME - KU | G 1 1/2 | 48 | 55 | 1,5 | 100 | 171,15 |
| 515618 | FLR | RAME - KU | G 2 | 60 | 68 | 1,5 | 100 | 265,89 |
| | | | | | | | | |
| 515609 | FLR | RAME - KU | M 10X1,5 | 10 | 16 | 1,5 | 100 | 21,39 |
| 515620 | FLR | RAME - KU | M 12X1,5 | 12 | 18 | 1,5 | 100 | 25,37 |
| 515621 | FLR | RAME - KU | M 14X1,5 | 14 | 20 | 1,5 | 100 | 28,93 |
| 515622 | FLR | RAME - KU | M 16X1,5 | 16 | 22 | 1,5 | 100 | 35,55 |
| 515623 | FLR | RAME - KU | M 18X1,5 | 18 | 24 | 1,5 | 100 | 39,02 |
| 515624 | FLR | RAME - KU | M 20X1,5 | 20 | 26 | 1,5 | 100 | 44,42 |
| 515625 | FLR | RAME - KU | M 22X1,5 | 22 | 28 | 1,5 | 100 | 49,82 |
| 515626 | FLR | RAME - KU | M 26X1,5 | 26 | 32 | 1,5 | 100 | 62,65 |
| 515627 | FLR | RAME - KU | M 30X1,5 | 30 | 36 | 1,5 | 100 | 78,55 |
| 515628 | FLR | RAME - KU | M 38X1,5 | 38 | 44 | 1,5 | 100 | 174,21 |
| 515629 | FLR | RAME - KU | M45X1,5 | 45 | 52 | 1,5 | 100 | 225,14 |

# X-Ring

FKM 70
NBR 70

XR

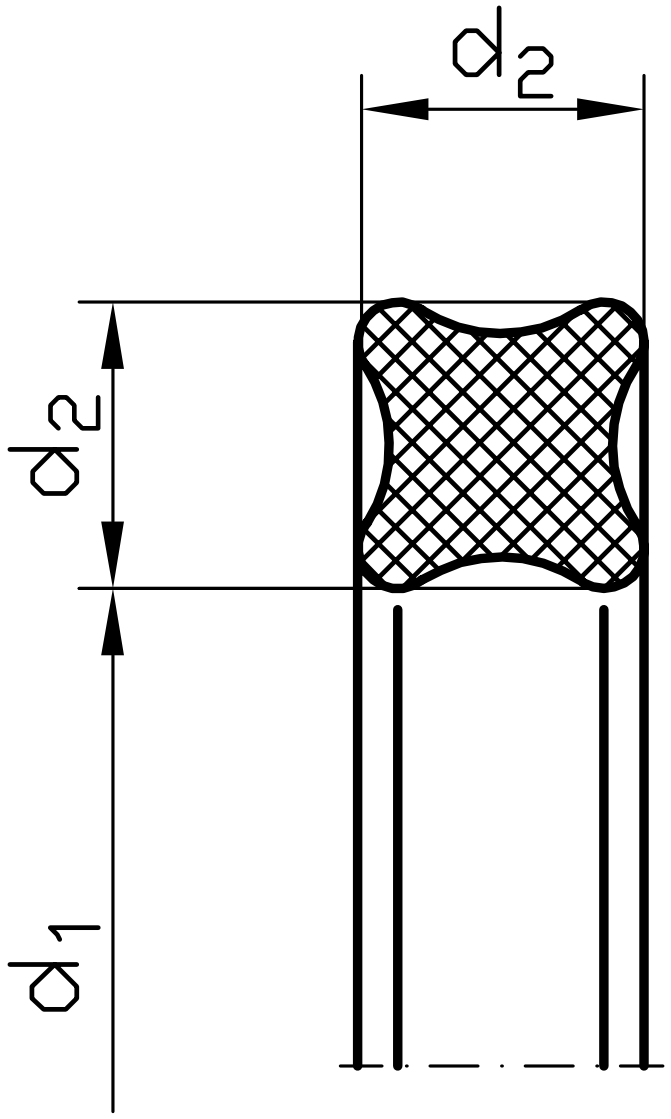
d2
d2
d1

| CODICE | TIPO | MAT. | SH | d1 mm | d2 mm | LISTINO 5-2016 X 100 € |
|---|---|---|---|---|---|---|
| 126462 | XR | FKM | 70 | 1,07 | 1,27 | 116,33 |
| 46827 | XR | FKM | 70 | 2,9 | 1,78 | 45,19 |
| 44192 | XR | FKM | 70 | 3,68 | 1,78 | 51,59 |
| 72904 | XR | FKM | 70 | 4,48 | 1,78 | 49,47 |
| 134435 | XR | FKM | 70 | 5,28 | 1,78 | 57,25 |
| 61705 | XR | FKM | 70 | 6,07 | 1,78 | 64,54 |
| 62878 | XR | FKM | 70 | 7,66 | 1,78 | 71,55 |
| 38780 | XR | FKM | 70 | 9,25 | 1,78 | 83,00 |
| 126136 | XR | FKM | 70 | 10,82 | 1,78 | 106,97 |
| 134436 | XR | FKM | 70 | 12,42 | 1,78 | 114,82 |
| 134437 | XR | FKM | 70 | 14 | 1,78 | 123,18 |
| 56508 | XR | FKM | 70 | 15,6 | 1,78 | 129,38 |
| 134438 | XR | FKM | 70 | 17,16 | 1,78 | 130,18 |
| 126137 | XR | FKM | 70 | 21,95 | 1,78 | 170,92 |
| 134441 | XR | FKM | 70 | 23,53 | 1,78 | 186,03 |
| 125955 | XR | FKM | 70 | 25,12 | 1,78 | 195,28 |
| 133741 | XR | FKM | 70 | 28,3 | 1,78 | 230,94 |
| 64378 | XR | FKM | 70 | 29,87 | 1,78 | 247,80 |
| 134442 | XR | FKM | 70 | 31,47 | 1,78 | 144,97 |
| 134443 | XR | FKM | 70 | 33,05 | 1,78 | 161,01 |
| 134444 | XR | FKM | 70 | 34,65 | 1,78 | 312,31 |
| 134662 | XR | FKM | 70 | 44,17 | 1,78 | 228,50 |
| 134663 | XR | FKM | 70 | 47,35 | 1,78 | 249,22 |
| 134665 | XR | FKM | 70 | 53,67 | 1,78 | 300,47 |
| 134666 | XR | FKM | 70 | 56,87 | 1,78 | 586,65 |
| 134667 | XR | FKM | 70 | 60,04 | 1,78 | 347,77 |
| 134668 | XR | FKM | 70 | 63,22 | 1,78 | 587,79 |
| 134669 | XR | FKM | 70 | 66,4 | 1,78 | 660,64 |
| 134670 | XR | FKM | 70 | 69,57 | 1,78 | 542,09 |
| 134671 | XR | FKM | 70 | 72,76 | 1,78 | 450,28 |
| 135078 | XR | FKM | 70 | 82,28 | 1,78 | 791,89 |
| 135079 | XR | FKM | 70 | 88,62 | 1,78 | 928,48 |
| 135080 | XR | FKM | 70 | 94,97 | 1,78 | 951,60 |
| 135081 | XR | FKM | 70 | 101,34 | 1,78 | 1.027,46 |
| 135082 | XR | FKM | 70 | 107,7 | 1,78 | 1.065,38 |
| 135083 | XR | FKM | 70 | 114 | 1,78 | 1.349,60 |
| 135085 | XR | FKM | 70 | 126,76 | 1,78 | 1.541,34 |
| 143446 | XR | FKM | 70 | 2,06 | 2,62 | 99,36 |
| 143448 | XR | FKM | 70 | 4,42 | 2,62 | 109,98 |
| 143449 | XR | FKM | 70 | 6,02 | 2,62 | 131,69 |
| 92952 | XR | FKM | 70 | 7,6 | 2,62 | 127,43 |
| 57179 | XR | FKM | 70 | 9,19 | 2,62 | 136,49 |
| 56230 | XR | FKM | 70 | 10,78 | 2,62 | 153,57 |
| 56510 | XR | FKM | 70 | 12,37 | 2,62 | 161,96 |
| 62880 | XR | FKM | 70 | 13,95 | 2,62 | 179,49 |
| 70267 | XR | FKM | 70 | 15,54 | 2,62 | 190,08 |
| 133800 | XR | FKM | 70 | 17,13 | 2,62 | 213,67 |
| 74373 | XR | FKM | 70 | 18,72 | 2,62 | 224,83 |
| 134425 | XR | FKM | 70 | 20,29 | 2,62 | 242,24 |

| CODICE | TIPO | MAT. | SH | d1 mm | d2 mm | LISTINO 5-2016 X 100 € |
|---|---|---|---|---|---|---|
| 134426 | XR | FKM | 70 | 21,89 | 2,62 | 259,33 |
| 56509 | XR | FKM | 70 | 25,07 | 2,62 | 312,31 |
| 134428 | XR | FKM | 70 | 26,64 | 2,62 | 346,71 |
| 134429 | XR | FKM | 70 | 28,25 | 2,62 | 254,71 |
| 74786 | XR | FKM | 70 | 29,82 | 2,62 | 364,00 |
| 134431 | XR | FKM | 70 | 33 | 2,62 | 395,23 |
| 25335 | XR | FKM | 70 | 34,59 | 2,62 | 463,52 |
| 134432 | XR | FKM | 70 | 36,17 | 2,62 | 273,69 |
| 134433 | XR | FKM | 70 | 37,77 | 2,62 | 513,76 |
| 134434 | XR | FKM | 70 | 39,34 | 2,62 | 527,93 |
| 134989 | XR | FKM | 70 | 40,95 | 2,62 | 544,90 |
| 134990 | XR | FKM | 70 | 42,52 | 2,62 | 532,61 |
| 134991 | XR | FKM | 70 | 44,12 | 2,62 | 605,45 |
| 134992 | XR | FKM | 70 | 45,69 | 2,62 | 636,93 |
| 134993 | XR | FKM | 70 | 47,29 | 2,62 | 369,67 |
| 134995 | XR | FKM | 70 | 50,47 | 2,62 | 705,85 |
| 134996 | XR | FKM | 70 | 52,07 | 2,62 | 736,64 |
| 134997 | XR | FKM | 70 | 55,25 | 2,62 | 429,68 |
| 134998 | XR | FKM | 70 | 56,82 | 2,62 | 457,17 |
| 135000 | XR | FKM | 70 | 58,42 | 2,62 | 470,81 |
| 134999 | XR | FKM | 70 | 60 | 2,62 | 828,51 |
| 135262 | XR | FKM | 70 | 61,6 | 2,62 | 864,03 |
| 135263 | XR | FKM | 70 | 63,17 | 2,62 | 887,75 |
| 135264 | XR | FKM | 70 | 64,77 | 2,62 | 957,15 |
| 135265 | XR | FKM | 70 | 66,35 | 2,62 | 947,06 |
| 135266 | XR | FKM | 70 | 67,95 | 2,62 | 970,74 |
| 135267 | XR | FKM | 70 | 69,52 | 2,62 | 928,86 |
| 56998 | XR | FKM | 70 | 72,69 | 2,62 | 1.100,97 |
| 132829 | XR | FKM | 70 | 88,57 | 2,62 | 1.265,17 |
| 143450 | XR | FKM | 70 | 101,27 | 2,62 | 1.420,78 |
| 143451 | XR | FKM | 70 | 107,63 | 2,62 | 1.558,33 |
| 143455 | XR | FKM | 70 | 113,98 | 2,62 | 1.715,45 |
| 143456 | XR | FKM | 70 | 120,33 | 2,62 | 1.866,82 |
| 143457 | XR | FKM | 70 | 126,67 | 2,62 | 2.107,32 |
| 143459 | XR | FKM | 70 | 139,38 | 2,62 | 2.244,02 |
| 143824 | XR | FKM | 70 | 145,72 | 2,62 | 2.442,72 |
| 143826 | XR | FKM | 70 | 158,41 | 2,62 | 2.637,28 |
| 143827 | XR | FKM | 70 | 164,78 | 2,62 | 2.755,55 |
| 143829 | XR | FKM | 70 | 177,47 | 2,62 | 2.820,41 |
| 143831 | XR | FKM | 70 | 190,18 | 2,62 | 3.231,89 |
| 143832 | XR | FKM | 70 | 196,53 | 2,62 | 3.314,58 |
| 143834 | XR | FKM | 70 | 209,23 | 2,62 | 4.142,32 |
| 148469 | XR | FKM | 70 | 221,93 | 2,62 | 4.545,00 |
| 148470 | XR | FKM | 70 | 228,28 | 2,62 | 4.734,76 |
| 148472 | XR | FKM | 70 | 240,98 | 2,62 | 5.207,79 |
| 148474 | XR | FKM | 70 | 247,33 | 2,62 | 5.626,52 |
| 133757 | XR | FKM | 70 | 10,69 | 3,53 | 256,92 |
| 134127 | XR | FKM | 70 | 12,29 | 3,53 | 277,50 |
| 187657 | XR | FKM | 70 | 13,87 | 3,53 | 306,52 |

| CODICE | TIPO | MAT. | SH | d1 mm | d2 mm | LISTINO 5-2016 X 100 € |
|---|---|---|---|---|---|---|
| 163020 | XR | FKM | 70 | 15,47 | 3,53 | 299,51 |
| 164327 | XR | FKM | 70 | 17,04 | 3,53 | 352,17 |
| 69374 | XR | FKM | 70 | 18,64 | 3,53 | 348,46 |
| 83387 | XR | FKM | 70 | 20,22 | 3,53 | 427,60 |
| 44005 | XR | FKM | 70 | 21,82 | 3,53 | 462,10 |
| 124399 | XR | FKM | 70 | 23,4 | 3,53 | 508,15 |
| 42984 | XR | FKM | 70 | 24,99 | 3,53 | 481,10 |
| 127201 | XR | FKM | 70 | 26,58 | 3,53 | 564,10 |
| 69547 | XR | FKM | 70 | 28,17 | 3,53 | 552,09 |
| 75186 | XR | FKM | 70 | 29,75 | 3,53 | 590,37 |
| 44006 | XR | FKM | 70 | 31,34 | 3,53 | 626,00 |
| 134129 | XR | FKM | 70 | 32,92 | 3,53 | 630,96 |
| 72846 | XR | FKM | 70 | 34,52 | 3,53 | 672,26 |
| 73066 | XR | FKM | 70 | 36,1 | 3,53 | 795,31 |
| 74797 | XR | FKM | 70 | 37,69 | 3,53 | 825,22 |
| 76155 | XR | FKM | 70 | 40,87 | 3,53 | 867,02 |
| 74374 | XR | FKM | 70 | 44,04 | 3,53 | 913,11 |
| 107765 | XR | FKM | 70 | 47,22 | 3,53 | 841,93 |
| 134130 | XR | FKM | 70 | 50,4 | 3,53 | 1.022,93 |
| 134131 | XR | FKM | 70 | 53,57 | 3,53 | 1.079,73 |
| 84823 | XR | FKM | 70 | 56,74 | 3,53 | 1.155,41 |
| 56896 | XR | FKM | 70 | 59,92 | 3,53 | 1.207,11 |
| 69982 | XR | FKM | 70 | 63,09 | 3,53 | 1.329,33 |
| 57289 | XR | FKM | 70 | 69,44 | 3,53 | 1.439,41 |
| 134898 | XR | FKM | 70 | 72,62 | 3,53 | 1.514,21 |
| 134899 | XR | FKM | 70 | 75,8 | 3,53 | 1.567,00 |
| 56997 | XR | FKM | 70 | 78,97 | 3,53 | 1.607,39 |
| 56999 | XR | FKM | 70 | 82,14 | 3,53 | 1.693,66 |
| 134902 | XR | FKM | 70 | 88,5 | 3,53 | 1.805,64 |
| 134905 | XR | FKM | 70 | 98,02 | 3,53 | 2.011,45 |
| 134906 | XR | FKM | 70 | 101,2 | 3,53 | 2.073,30 |
| 134907 | XR | FKM | 70 | 104,37 | 3,53 | 2.152,41 |
| 121416 | XR | FKM | 70 | 107,54 | 3,53 | 2.101,65 |
| 37444 | XR | FKM | 70 | 110,72 | 3,53 | 2.199,62 |
| 37445 | XR | FKM | 70 | 113,9 | 3,53 | 2.217,15 |
| 143383 | XR | FKM | 70 | 123,42 | 3,53 | 2.531,75 |
| 143384 | XR | FKM | 70 | 126,6 | 3,53 | 2.570,38 |
| 78170 | XR | FKM | 70 | 129,77 | 3,53 | 2.733,65 |
| 74560 | XR | FKM | 70 | 132,94 | 3,53 | 2.510,94 |
| 143385 | XR | FKM | 70 | 136,12 | 3,53 | 2.735,28 |
| 143386 | XR | FKM | 70 | 142,47 | 3,53 | 2.855,51 |
| 143387 | XR | FKM | 70 | 145,65 | 3,53 | 3.077,73 |
| 143462 | XR | FKM | 70 | 148,82 | 3,53 | 3.246,10 |
| 74559 | XR | FKM | 70 | 151,99 | 3,53 | 3.371,50 |
| 143463 | XR | FKM | 70 | 158,35 | 3,53 | 3.664,32 |
| 143464 | XR | FKM | 70 | 164,7 | 3,53 | 3.583,70 |
| 127951 | XR | FKM | 70 | 171,05 | 3,53 | 3.885,00 |
| 143465 | XR | FKM | 70 | 177,4 | 3,53 | 4.045,80 |
| 143466 | XR | FKM | 70 | 183,75 | 3,53 | 4.198,88 |

| CODICE | TIPO | MAT. | SH | d1 mm | d2 mm | LISTINO 5-2016 X 100 € |
|---|---|---|---|---|---|---|
| 143468 | XR | FKM | 70 | 202,79 | 3,53 | 4.190,20 |
| 143469 | XR | FKM | 70 | 209,14 | 3,53 | 4.263,82 |
| 68219 | XR | FKM | 70 | 215,49 | 3,53 | 4.385,73 |
| 143890 | XR | FKM | 70 | 221,84 | 3,53 | 4.780,57 |
| 143891 | XR | FKM | 70 | 228,19 | 3,53 | 4.934,57 |
| 143892 | XR | FKM | 70 | 234,54 | 3,53 | 5.012,34 |
| 143893 | XR | FKM | 70 | 247,24 | 3,53 | 6.837,27 |
| 143895 | XR | FKM | 70 | 266,3 | 3,53 | 7.260,72 |
| 143897 | XR | FKM | 70 | 291,7 | 3,53 | 7.568,18 |
| 143899 | XR | FKM | 70 | 329,8 | 3,53 | 7.813,25 |
| 27951 | XR | FKM | 70 | 355,2 | 3,53 | 8.167,33 |
| 148475 | XR | FKM | 70 | 380,6 | 3,53 | 8.728,64 |
| 126183 | XR | FKM | 70 | 405,26 | 3,53 | 9.212,16 |
| 148480 | XR | FKM | 70 | 430,66 | 3,53 | 10.002,44 |
| 148481 | XR | FKM | 70 | 456,06 | 3,53 | 10.195,83 |
| 64380 | XR | FKM | 70 | 32,69 | 5,33 | 1.433,44 |
| 90452 | XR | FKM | 70 | 34,29 | 5,33 | 1.458,92 |
| 61366 | XR | FKM | 70 | 37,47 | 5,33 | 1.567,21 |
| 77955 | XR | FKM | 70 | 40,65 | 5,33 | 1.582,99 |
| 69375 | XR | FKM | 70 | 43,82 | 5,33 | 1.704,91 |
| 37102 | XR | FKM | 70 | 47 | 5,33 | 1.659,42 |
| 69376 | XR | FKM | 70 | 50,16 | 5,33 | 1.704,60 |
| 59402 | XR | FKM | 70 | 53,34 | 5,33 | 1.916,30 |
| 78594 | XR | FKM | 70 | 56,52 | 5,33 | 2.023,23 |
| 72968 | XR | FKM | 70 | 59,7 | 5,33 | 2.186,89 |
| 72845 | XR | FKM | 70 | 62,87 | 5,33 | 2.554,05 |
| 44811 | XR | FKM | 70 | 66,04 | 5,33 | 2.640,17 |
| 68009 | XR | FKM | 70 | 69,22 | 5,33 | 2.748,97 |
| 59386 | XR | FKM | 70 | 72,4 | 5,33 | 2.644,30 |
| 68008 | XR | FKM | 70 | 75,57 | 5,33 | 3.102,95 |
| 61638 | XR | FKM | 70 | 78,74 | 5,33 | 2.670,89 |
| 134128 | XR | FKM | 70 | 81,92 | 5,33 | 2.854,45 |
| 44477 | XR | FKM | 70 | 85,09 | 5,33 | 3.430,91 |
| 44097 | XR | FKM | 70 | 88,27 | 5,33 | 3.723,42 |
| 75319 | XR | FKM | 70 | 91,44 | 5,33 | 3.813,12 |
| 56173 | XR | FKM | 70 | 94,62 | 5,33 | 3.897,61 |
| 44478 | XR | FKM | 70 | 100,97 | 5,33 | 4.069,06 |
| 78595 | XR | FKM | 70 | 104,14 | 5,33 | 4.168,49 |
| 57153 | XR | FKM | 70 | 107,32 | 5,33 | 3.641,36 |
| 74561 | XR | FKM | 70 | 110,49 | 5,33 | 3.629,92 |
| 143902 | XR | FKM | 70 | 116,84 | 5,33 | 4.066,98 |
| 143904 | XR | FKM | 70 | 123,2 | 5,33 | 4.704,89 |
| 143905 | XR | FKM | 70 | 126,37 | 5,33 | 4.435,52 |
| 143906 | XR | FKM | 70 | 132,72 | 5,33 | 4.797,39 |
| 143907 | XR | FKM | 70 | 135,9 | 5,33 | 5.133,75 |
| 143908 | XR | FKM | 70 | 139,07 | 5,33 | 5.408,10 |
| 143910 | XR | FKM | 70 | 145,42 | 5,33 | 5.571,02 |
| 143911 | XR | FKM | 70 | 148,6 | 5,33 | 5.650,91 |
| 143912 | XR | FKM | 70 | 151,77 | 5,33 | 6.184,83 |

| CODICE | TIPO | MAT. | SH | d1 mm | d2 mm | LISTINO 5-2016 X 100 € |
|---|---|---|---|---|---|---|
| 128154 | XR | FKM | 70 | 158,12 | 5,33 | 6.309,38 |
| 143913 | XR | FKM | 70 | 164,47 | 5,33 | 6.299,14 |
| 143915 | XR | FKM | 70 | 177,17 | 5,33 | 6.962,41 |
| 57174 | XR | FKM | 70 | 196,22 | 5,33 | 7.595,70 |
| 144577 | XR | FKM | 70 | 202,57 | 5,33 | 8.336,87 |
| 144579 | XR | FKM | 70 | 215,27 | 5,33 | 8.230,03 |
| 144580 | XR | FKM | 70 | 221,62 | 5,33 | 8.859,16 |
| 144581 | XR | FKM | 70 | 227,97 | 5,33 | 9.075,03 |
| 144582 | XR | FKM | 70 | 234,32 | 5,33 | 8.853,09 |
| 44096 | XR | FKM | 70 | 240,67 | 5,33 | 9.415,38 |
| 144583 | XR | FKM | 70 | 253,37 | 5,33 | 10.133,16 |
| 144584 | XR | FKM | 70 | 266,07 | 5,33 | 10.488,54 |
| 149621 | XR | FKM | 70 | 278,77 | 5,33 | 10.123,12 |
| 149622 | XR | FKM | 70 | 291,47 | 5,33 | 11.768,52 |
| 149623 | XR | FKM | 70 | 304,17 | 5,33 | 12.759,39 |
| 149624 | XR | FKM | 70 | 329,57 | 5,33 | 14.355,00 |
| 149625 | XR | FKM | 70 | 354,97 | 5,33 | 16.374,39 |
| 149627 | XR | FKM | 70 | 405,26 | 5,33 | 16.808,57 |
| 149628 | XR | FKM | 70 | 430,66 | 5,33 | 17.469,89 |
| 149631 | XR | FKM | 70 | 506,81 | 5,33 | 18.816,01 |
| 149632 | XR | FKM | 70 | 532,2 | 5,33 | 21.405,34 |
| 151023 | XR | FKM | 70 | 557,61 | 5,33 | 24.061,77 |
| 151024 | XR | FKM | 70 | 582,68 | 5,33 | 26.922,91 |
| 151025 | XR | FKM | 70 | 608,08 | 5,33 | 31.126,25 |
| 151029 | XR | FKM | 70 | 658,88 | 5,33 | 34.996,53 |
| 134981 | XR | FKM | 70 | 116,84 | 6,99 | 7.089,69 |
| 62193 | XR | FKM | 70 | 120,02 | 6,99 | 6.579,40 |
| 79333 | XR | FKM | 70 | 129,54 | 6,99 | 7.647,00 |
| 134985 | XR | FKM | 70 | 139,07 | 6,99 | 8.446,41 |
| 134987 | XR | FKM | 70 | 145,42 | 6,99 | 8.398,75 |
| 134988 | XR | FKM | 70 | 148,6 | 6,99 | 9.397,16 |
| 61367 | XR | FKM | 70 | 151,77 | 6,99 | 9.746,57 |
| 44809 | XR | FKM | 70 | 158,12 | 6,99 | 9.959,17 |
| 143497 | XR | FKM | 70 | 164,47 | 6,99 | 9.181,29 |
| 134126 | XR | FKM | 70 | 183,52 | 6,99 | 10.107,43 |
| 75097 | XR | FKM | 70 | 189,87 | 6,99 | 12.129,87 |
| 79334 | XR | FKM | 70 | 202,57 | 6,99 | 13.237,68 |
| 143500 | XR | FKM | 70 | 215,27 | 6,99 | 11.096,45 |
| 37652 | XR | FKM | 70 | 227,97 | 6,99 | 13.179,35 |
| 129208 | XR | FKM | 70 | 240,67 | 6,99 | 13.128,13 |
| 143502 | XR | FKM | 70 | 266,07 | 6,99 | 17.673,63 |
| 130183 | XR | FKM | 70 | 291,47 | 6,99 | 19.015,23 |
| 143503 | XR | FKM | 70 | 304,17 | 6,99 | 19.704,25 |
| 129732 | XR | FKM | 70 | 329,57 | 6,99 | 21.127,84 |
| 149634 | XR | FKM | 70 | 342,27 | 6,99 | 21.718,88 |
| 149635 | XR | FKM | 70 | 354,97 | 6,99 | 23.437,58 |
| 149636 | XR | FKM | 70 | 380,37 | 6,99 | 26.425,57 |
| 149637 | XR | FKM | 70 | 393,07 | 6,99 | 26.278,41 |
| 149640 | XR | FKM | 70 | 456,06 | 6,99 | 31.954,55 |
| 151032 | XR | FKM | 70 | 582,68 | 6,99 | 44.980,23 |

| CODICE | TIPO | MAT. | SH | d1 mm | d2 mm | LISTINO 5-2016 X 100 € |
|---|---|---|---|---|---|---|
| 127777 | XR | NBR | 70 | 1,78 | 1,78 | 39,82 |
| 74254 | XR | NBR | 70 | 2,57 | 1,78 | 39,82 |
| 127778 | XR | NBR | 70 | 2,9 | 1,78 | 39,82 |
| 127779 | XR | NBR | 70 | 3,68 | 1,78 | 39,82 |
| 73169 | XR | NBR | 70 | 4,48 | 1,78 | 39,82 |
| 127780 | XR | NBR | 70 | 5,28 | 1,78 | 39,82 |
| 76909 | XR | NBR | 70 | 6,07 | 1,78 | 39,81 |
| 127781 | XR | NBR | 70 | 7,66 | 1,78 | 39,81 |
| 78117 | XR | NBR | 70 | 8,2 | 1,78 | 40,51 |
| 73017 | XR | NBR | 70 | 9,25 | 1,78 | 41,05 |
| 127782 | XR | NBR | 70 | 10,82 | 1,78 | 41,51 |
| 127783 | XR | NBR | 70 | 12,42 | 1,78 | 45,36 |
| 127784 | XR | NBR | 70 | 14 | 1,78 | 51,25 |
| 127785 | XR | NBR | 70 | 15,6 | 1,78 | 51,25 |
| 127786 | XR | NBR | 70 | 17,17 | 1,78 | 56,01 |
| 127787 | XR | NBR | 70 | 18,77 | 1,78 | 56,01 |
| 127788 | XR | NBR | 70 | 20,35 | 1,78 | 60,49 |
| 127789 | XR | NBR | 70 | 21,95 | 1,78 | 60,49 |
| 127790 | XR | NBR | 70 | 23,52 | 1,78 | 60,49 |
| 127791 | XR | NBR | 70 | 25,12 | 1,78 | 97,69 |
| 127792 | XR | NBR | 70 | 26,7 | 1,78 | 89,97 |
| 127793 | XR | NBR | 70 | 28,3 | 1,78 | 89,97 |
| 127794 | XR | NBR | 70 | 29,87 | 1,78 | 89,97 |
| 127795 | XR | NBR | 70 | 31,47 | 1,78 | 94,13 |
| 127796 | XR | NBR | 70 | 33,05 | 1,78 | 97,69 |
| 127797 | XR | NBR | 70 | 34,65 | 1,78 | 97,69 |
| 127798 | XR | NBR | 70 | 37,82 | 1,78 | 123,14 |
| 127799 | XR | NBR | 70 | 41 | 1,78 | 169,60 |
| 127800 | XR | NBR | 70 | 44,17 | 1,78 | 209,87 |
| 127801 | XR | NBR | 70 | 47,35 | 1,78 | 137,03 |
| 127802 | XR | NBR | 70 | 50,52 | 1,78 | 185,33 |
| 127803 | XR | NBR | 70 | 53,67 | 1,78 | 185,33 |
| 127804 | XR | NBR | 70 | 56,87 | 1,78 | 203,38 |
| 127805 | XR | NBR | 70 | 60,04 | 1,78 | 204,90 |
| 127806 | XR | NBR | 70 | 63,22 | 1,78 | 207,86 |
| 127807 | XR | NBR | 70 | 66,4 | 1,78 | 209,87 |
| 127808 | XR | NBR | 70 | 69,57 | 1,78 | 214,34 |
| 127809 | XR | NBR | 70 | 72,75 | 1,78 | 222,37 |
| 127810 | XR | NBR | 70 | 75,92 | 1,78 | 288,57 |
| 127811 | XR | NBR | 70 | 82,27 | 1,78 | 293,66 |
| 127812 | XR | NBR | 70 | 88,62 | 1,78 | 418,66 |
| 127813 | XR | NBR | 70 | 94,97 | 1,78 | 419,58 |
| 127815 | XR | NBR | 70 | 107,67 | 1,78 | 607,07 |
| 127816 | XR | NBR | 70 | 114,02 | 1,78 | 856,44 |
| 127818 | XR | NBR | 70 | 126,72 | 1,78 | 891,78 |
| 127819 | XR | NBR | 70 | 133,07 | 1,78 | 898,72 |
| 127825 | XR | NBR | 70 | 2,84 | 2,62 | 41,82 |
| 127827 | XR | NBR | 70 | 4,42 | 2,62 | 41,82 |
| 127828 | XR | NBR | 70 | 5,23 | 2,62 | 41,82 |

| CODICE | TIPO | MAT. | SH | d1 mm | d2 mm | LISTINO 5-2016 X 100 € |
|---|---|---|---|---|---|---|
| 127829 | XR | NBR | 70 | 6,02 | 2,62 | 41,82 |
| 127830 | XR | NBR | 70 | 7,6 | 2,62 | 45,36 |
| 127741 | XR | NBR | 70 | 9,19 | 2,62 | 48,51 |
| 64765 | XR | NBR | 70 | 10,78 | 2,62 | 50,12 |
| 73170 | XR | NBR | 70 | 12,37 | 2,62 | 51,90 |
| 127831 | XR | NBR | 70 | 13,95 | 2,62 | 53,70 |
| 127832 | XR | NBR | 70 | 15,54 | 2,62 | 53,70 |
| 69308 | XR | NBR | 70 | 17,12 | 2,62 | 58,37 |
| 68355 | XR | NBR | 70 | 18,72 | 2,62 | 64,36 |
| 127833 | XR | NBR | 70 | 20,29 | 2,62 | 64,36 |
| 127834 | XR | NBR | 70 | 21,89 | 2,62 | 64,35 |
| 127835 | XR | NBR | 70 | 23,47 | 2,62 | 102,01 |
| 127836 | XR | NBR | 70 | 25,07 | 2,62 | 102,00 |
| 127837 | XR | NBR | 70 | 26,64 | 2,62 | 106,48 |
| 127838 | XR | NBR | 70 | 28,25 | 2,62 | 106,48 |
| 127839 | XR | NBR | 70 | 29,82 | 2,62 | 110,95 |
| 127840 | XR | NBR | 70 | 31,42 | 2,62 | 110,95 |
| 127743 | XR | NBR | 70 | 32,99 | 2,62 | 110,95 |
| 127359 | XR | NBR | 70 | 34,59 | 2,62 | 110,95 |
| 121605 | XR | NBR | 70 | 36,17 | 2,62 | 110,95 |
| 127841 | XR | NBR | 70 | 37,77 | 2,62 | 134,87 |
| 127842 | XR | NBR | 70 | 39,34 | 2,62 | 147,68 |
| 127843 | XR | NBR | 70 | 40,95 | 2,62 | 181,93 |
| 127844 | XR | NBR | 70 | 42,52 | 2,62 | 191,35 |
| 127845 | XR | NBR | 70 | 44,12 | 2,62 | 189,95 |
| 127846 | XR | NBR | 70 | 45,69 | 2,62 | 190,58 |
| 127847 | XR | NBR | 70 | 47,29 | 2,62 | 196,75 |
| 127848 | XR | NBR | 70 | 48,9 | 2,62 | 212,49 |
| 84918 | XR | NBR | 70 | 50,47 | 2,62 | 212,48 |
| 127849 | XR | NBR | 70 | 52,07 | 2,62 | 212,48 |
| 127850 | XR | NBR | 70 | 53,65 | 2,62 | 212,48 |
| 127851 | XR | NBR | 70 | 55,25 | 2,62 | 218,04 |
| 127857 | XR | NBR | 70 | 56,82 | 2,62 | 218,04 |
| 127858 | XR | NBR | 70 | 58,42 | 2,62 | 223,45 |
| 127859 | XR | NBR | 70 | 60 | 2,62 | 223,45 |
| 127860 | XR | NBR | 70 | 61,6 | 2,62 | 228,08 |
| 127861 | XR | NBR | 70 | 63,17 | 2,62 | 242,12 |
| 127862 | XR | NBR | 70 | 64,77 | 2,62 | 242,12 |
| 127863 | XR | NBR | 70 | 66,35 | 2,62 | 305,38 |
| 127864 | XR | NBR | 70 | 67,95 | 2,62 | 305,38 |
| 127865 | XR | NBR | 70 | 69,52 | 2,62 | 312,33 |
| 127866 | XR | NBR | 70 | 71,12 | 2,62 | 420,97 |
| 127912 | XR | NBR | 70 | 72,69 | 2,62 | 426,06 |
| 127913 | XR | NBR | 70 | 75,87 | 2,62 | 426,22 |
| 127915 | XR | NBR | 70 | 88,57 | 2,62 | 466,80 |
| 127916 | XR | NBR | 70 | 94,93 | 2,62 | 483,93 |
| 127917 | XR | NBR | 70 | 101,27 | 2,62 | 483,93 |
| 127918 | XR | NBR | 70 | 107,63 | 2,62 | 663,55 |
| 127919 | XR | NBR | 70 | 113,98 | 2,62 | 659,24 |

| CODICE | TIPO | MAT. | SH | d1 mm | d2 mm | LISTINO 5-2016 X 100 € |
|---|---|---|---|---|---|---|
| 127920 | XR | NBR | 70 | 120,32 | 2,62 | 920,33 |
| 127921 | XR | NBR | 70 | 126,67 | 2,62 | 927,28 |
| 127922 | XR | NBR | 70 | 133,02 | 2,62 | 941,47 |
| 127923 | XR | NBR | 70 | 139,37 | 2,62 | 964,62 |
| 127924 | XR | NBR | 70 | 145,72 | 2,62 | 964,62 |
| 127925 | XR | NBR | 70 | 152,07 | 2,62 | 964,62 |
| 127926 | XR | NBR | 70 | 158,42 | 2,62 | 977,11 |
| 127928 | XR | NBR | 70 | 164,77 | 2,62 | 1.035,13 |
| 127929 | XR | NBR | 70 | 171,12 | 2,62 | 1.700,24 |
| 127930 | XR | NBR | 70 | 177,47 | 2,62 | 1.732,18 |
| 127931 | XR | NBR | 70 | 183,82 | 2,62 | 1.762,57 |
| 127932 | XR | NBR | 70 | 190,18 | 2,62 | 1.776,16 |
| 148635 | XR | NBR | 70 | 202,87 | 2,62 | 1.860,75 |
| 148636 | XR | NBR | 70 | 209,23 | 2,62 | 1.916,57 |
| 148637 | XR | NBR | 70 | 215,58 | 2,62 | 1.974,06 |
| 148638 | XR | NBR | 70 | 221,93 | 2,62 | 2.033,29 |
| 148640 | XR | NBR | 70 | 234,63 | 2,62 | 2.157,13 |
| 148641 | XR | NBR | 70 | 240,98 | 2,62 | 2.222,63 |
| 148642 | XR | NBR | 70 | 247,33 | 2,62 | 2.288,51 |
| 127934 | XR | NBR | 70 | 9,12 | 3,53 | 66,66 |
| 127136 | XR | NBR | 70 | 12,29 | 3,53 | 70,68 |
| 37185 | XR | NBR | 70 | 13,87 | 3,53 | 70,68 |
| 127936 | XR | NBR | 70 | 15,47 | 3,53 | 72,99 |
| 126943 | XR | NBR | 70 | 17,04 | 3,53 | 72,99 |
| 79251 | XR | NBR | 70 | 18,64 | 3,53 | 74,99 |
| 127937 | XR | NBR | 70 | 20,22 | 3,53 | 109,25 |
| 127742 | XR | NBR | 70 | 21,82 | 3,53 | 111,11 |
| 66091 | XR | NBR | 70 | 23,4 | 3,53 | 113,26 |
| 38038 | XR | NBR | 70 | 24,99 | 3,53 | 113,26 |
| 68340 | XR | NBR | 70 | 26,58 | 3,53 | 115,12 |
| 45435 | XR | NBR | 70 | 28,17 | 3,53 | 115,59 |
| 61412 | XR | NBR | 70 | 29,75 | 3,53 | 119,13 |
| 127938 | XR | NBR | 70 | 31,34 | 3,53 | 139,19 |
| 127939 | XR | NBR | 70 | 32,92 | 3,53 | 149,84 |
| 64817 | XR | NBR | 70 | 34,52 | 3,53 | 149,84 |
| 127940 | XR | NBR | 70 | 36,09 | 3,53 | 149,84 |
| 74105 | XR | NBR | 70 | 37,69 | 3,53 | 149,84 |
| 127744 | XR | NBR | 70 | 40,87 | 3,53 | 149,84 |
| 127941 | XR | NBR | 70 | 44,04 | 3,53 | 204,47 |
| 127942 | XR | NBR | 70 | 47,22 | 3,53 | 245,98 |
| 127943 | XR | NBR | 70 | 50,4 | 3,53 | 248,29 |
| 127944 | XR | NBR | 70 | 53,57 | 3,53 | 248,29 |
| 62173 | XR | NBR | 70 | 56,74 | 3,53 | 255,85 |
| 127745 | XR | NBR | 70 | 59,92 | 3,53 | 258,01 |
| 127945 | XR | NBR | 70 | 63,09 | 3,53 | 289,03 |
| 127946 | XR | NBR | 70 | 66,27 | 3,53 | 409,24 |
| 72503 | XR | NBR | 70 | 69,44 | 3,53 | 377,76 |
| 127947 | XR | NBR | 70 | 72,62 | 3,53 | 471,74 |
| 127965 | XR | NBR | 70 | 75,8 | 3,53 | 511,24 |

| CODICE | TIPO | MAT. | SH | d1 mm | d2 mm | LISTINO 5-2016 X 100 € |
|---|---|---|---|---|---|---|
| 127966 | XR | NBR | 70 | 78,97 | 3,53 | 511,24 |
| 127967 | XR | NBR | 70 | 82,14 | 3,53 | 511,24 |
| 42983 | XR | NBR | 70 | 85,32 | 3,53 | 511,24 |
| 61189 | XR | NBR | 70 | 88,5 | 3,53 | 511,25 |
| 127968 | XR | NBR | 70 | 91,67 | 3,53 | 693,02 |
| 127969 | XR | NBR | 70 | 94,84 | 3,53 | 693,02 |
| 127970 | XR | NBR | 70 | 98,02 | 3,53 | 726,68 |
| 127971 | XR | NBR | 70 | 101,2 | 3,53 | 726,67 |
| 127972 | XR | NBR | 70 | 104,37 | 3,53 | 869,00 |
| 127973 | XR | NBR | 70 | 107,54 | 3,53 | 972,33 |
| 127974 | XR | NBR | 70 | 110,72 | 3,53 | 972,96 |
| 127975 | XR | NBR | 70 | 113,9 | 3,53 | 981,44 |
| 69821 | XR | NBR | 70 | 117,07 | 3,53 | 997,49 |
| 127976 | XR | NBR | 70 | 120,25 | 3,53 | 997,49 |
| 84511 | XR | NBR | 70 | 123,42 | 3,53 | 997,49 |
| 127977 | XR | NBR | 70 | 126,6 | 3,53 | 997,49 |
| 127978 | XR | NBR | 70 | 129,77 | 3,53 | 1.016,93 |
| 127979 | XR | NBR | 70 | 132,94 | 3,53 | 1.016,93 |
| 69957 | XR | NBR | 70 | 136,12 | 3,53 | 1.026,11 |
| 69956 | XR | NBR | 70 | 139,3 | 3,53 | 1.046,71 |
| 127980 | XR | NBR | 70 | 142,47 | 3,53 | 1.046,71 |
| 127981 | XR | NBR | 70 | 145,65 | 3,53 | 1.057,36 |
| 72504 | XR | NBR | 70 | 148,82 | 3,53 | 1.075,88 |
| 127982 | XR | NBR | 70 | 151,99 | 3,53 | 1.097,18 |
| 127983 | XR | NBR | 70 | 158,34 | 3,53 | 1.097,79 |
| 72505 | XR | NBR | 70 | 164,7 | 3,53 | 1.113,68 |
| 84321 | XR | NBR | 70 | 171,05 | 3,53 | 1.113,68 |
| 127984 | XR | NBR | 70 | 177,4 | 3,53 | 1.815,97 |
| 127985 | XR | NBR | 70 | 183,75 | 3,53 | 1.838,50 |
| 38231 | XR | NBR | 70 | 190,1 | 3,53 | 1.859,64 |
| 127986 | XR | NBR | 70 | 196,44 | 3,53 | 1.859,64 |
| 127987 | XR | NBR | 70 | 202,79 | 3,53 | 1.859,64 |
| 127988 | XR | NBR | 70 | 209,14 | 3,53 | 1.915,51 |
| 127989 | XR | NBR | 70 | 215,49 | 3,53 | 1.923,53 |
| 127990 | XR | NBR | 70 | 221,84 | 3,53 | 1.939,12 |
| 127991 | XR | NBR | 70 | 228,19 | 3,53 | 1.968,89 |
| 127992 | XR | NBR | 70 | 234,54 | 3,53 | 1.988,49 |
| 127993 | XR | NBR | 70 | 240,89 | 3,53 | 2.022,29 |
| 127994 | XR | NBR | 70 | 247,24 | 3,53 | 2.052,54 |
| 127995 | XR | NBR | 70 | 253,59 | 3,53 | 2.071,82 |
| 127996 | XR | NBR | 70 | 266,29 | 3,53 | 2.071,82 |
| 127997 | XR | NBR | 70 | 278,99 | 3,53 | 2.071,82 |
| 143901 | XR | NBR | 70 | 291,70 | 3,53 | 2.107,71 |
| 84510 | XR | NBR | 70 | 304,39 | 3,53 | 2.213,50 |
| 143900 | XR | NBR | 70 | 329,8 | 3,53 | 2.244,85 |
| 156388 | XR | NBR | 70 | 380,6 | 3,53 | 2.582,99 |
| 149556 | XR | NBR | 70 | 430,66 | 3,53 | 3.182,82 |
| 56373 | XR | NBR | 70 | 15,24 | 5,33 | 139,97 |
| 127999 | XR | NBR | 70 | 16,81 | 5,33 | 142,43 |

| CODICE | TIPO | MAT. | SH | d1 mm | d2 mm | LISTINO 5-2016 X 100 € |
|---|---|---|---|---|---|---|
| 128001 | XR | NBR | 70 | 19,99 | 5,33 | 157,09 |
| 128003 | XR | NBR | 70 | 23,16 | 5,33 | 177,62 |
| 128004 | XR | NBR | 70 | 24,77 | 5,33 | 179,62 |
| 128005 | XR | NBR | 70 | 26,34 | 5,33 | 185,64 |
| 128006 | XR | NBR | 70 | 27,94 | 5,33 | 187,95 |
| 127358 | XR | NBR | 70 | 29,51 | 5,33 | 204,17 |
| 128007 | XR | NBR | 70 | 31,12 | 5,33 | 204,16 |
| 128008 | XR | NBR | 70 | 32,69 | 5,33 | 212,49 |
| 128009 | XR | NBR | 70 | 34,29 | 5,33 | 244,59 |
| 128010 | XR | NBR | 70 | 37,47 | 5,33 | 268,04 |
| 126944 | XR | NBR | 70 | 39,2 | 5,33 | 279,74 |
| 64766 | XR | NBR | 70 | 40,65 | 5,33 | 284,87 |
| 128011 | XR | NBR | 70 | 43,82 | 5,33 | 293,05 |
| 128012 | XR | NBR | 70 | 47 | 5,33 | 293,04 |
| 64764 | XR | NBR | 70 | 50,16 | 5,33 | 293,04 |
| 128013 | XR | NBR | 70 | 53,34 | 5,33 | 397,66 |
| 128014 | XR | NBR | 70 | 56,52 | 5,33 | 482,39 |
| 128015 | XR | NBR | 70 | 59,7 | 5,33 | 482,39 |
| 128017 | XR | NBR | 70 | 62,87 | 5,33 | 482,39 |
| 127746 | XR | NBR | 70 | 66,04 | 5,33 | 482,39 |
| 128018 | XR | NBR | 70 | 69,22 | 5,33 | 546,73 |
| 127747 | XR | NBR | 70 | 72,4 | 5,33 | 546,73 |
| 68294 | XR | NBR | 70 | 75,57 | 5,33 | 546,73 |
| 62172 | XR | NBR | 70 | 78,74 | 5,33 | 546,73 |
| 127748 | XR | NBR | 70 | 81,92 | 5,33 | 546,73 |
| 128019 | XR | NBR | 70 | 85,09 | 5,33 | 647,50 |
| 44839 | XR | NBR | 70 | 88,27 | 5,33 | 647,49 |
| 128020 | XR | NBR | 70 | 91,44 | 5,33 | 688,24 |
| 128021 | XR | NBR | 70 | 94,62 | 5,33 | 851,97 |
| 128022 | XR | NBR | 70 | 97,8 | 5,33 | 851,97 |
| 128023 | XR | NBR | 70 | 100,97 | 5,33 | 851,97 |
| 128024 | XR | NBR | 70 | 104,14 | 5,33 | 1.006,29 |
| 44840 | XR | NBR | 70 | 107,32 | 5,33 | 1.006,29 |
| 128025 | XR | NBR | 70 | 110,49 | 5,33 | 1.006,29 |
| 127998 | XR | NBR | 70 | 113,67 | 5,33 | 1.006,29 |
| 128039 | XR | NBR | 70 | 116,84 | 5,33 | 1.219,23 |
| 128040 | XR | NBR | 70 | 120,02 | 5,33 | 1.232,98 |
| 128041 | XR | NBR | 70 | 123,2 | 5,33 | 1.248,55 |
| 26910 | XR | NBR | 70 | 126,37 | 5,33 | 1.262,14 |
| 128042 | XR | NBR | 70 | 129,54 | 5,33 | 1.280,35 |
| 128043 | XR | NBR | 70 | 132,72 | 5,33 | 1.292,70 |
| 128044 | XR | NBR | 70 | 135,9 | 5,33 | 1.305,03 |
| 128045 | XR | NBR | 70 | 139,07 | 5,33 | 1.326,95 |
| 128046 | XR | NBR | 70 | 142,24 | 5,33 | 1.326,94 |
| 128047 | XR | NBR | 70 | 145,42 | 5,33 | 1.362,75 |
| 128048 | XR | NBR | 70 | 148,49 | 5,33 | 1.362,75 |
| 128049 | XR | NBR | 70 | 151,77 | 5,33 | 1.362,75 |
| 128050 | XR | NBR | 70 | 158,12 | 5,33 | 1.362,75 |
| 128051 | XR | NBR | 70 | 164,47 | 5,33 | 1.806,56 |

| CODICE | TIPO | MAT. | SH | d1 mm | d2 mm | LISTINO 5-2016 X 100 € |
|---|---|---|---|---|---|---|
| 128052 | XR | NBR | 70 | 170,82 | 5,33 | 2.085,41 |
| 128053 | XR | NBR | 70 | 177,17 | 5,33 | 2.155,31 |
| 128054 | XR | NBR | 70 | 183,52 | 5,33 | 2.220,89 |
| 128055 | XR | NBR | 70 | 189,87 | 5,33 | 2.292,33 |
| 128056 | XR | NBR | 70 | 196,22 | 5,33 | 2.305,76 |
| 128057 | XR | NBR | 70 | 202,57 | 5,33 | 2.353,61 |
| 128058 | XR | NBR | 70 | 208,92 | 5,33 | 2.369,81 |
| 128059 | XR | NBR | 70 | 215,27 | 5,33 | 2.402,52 |
| 128060 | XR | NBR | 70 | 221,62 | 5,33 | 2.513,93 |
| 128061 | XR | NBR | 70 | 227,97 | 5,33 | 2.572,72 |
| 128062 | XR | NBR | 70 | 234,32 | 5,33 | 2.572,72 |
| 128063 | XR | NBR | 70 | 240,67 | 5,33 | 2.572,72 |
| 128065 | XR | NBR | 70 | 253,37 | 5,33 | 2.572,72 |
| 120684 | XR | NBR | 70 | 266,07 | 5,33 | 2.777,66 |
| 128067 | XR | NBR | 70 | 291,47 | 5,33 | 3.809,29 |
| 74104 | XR | NBR | 70 | 329,57 | 5,33 | 4.076,95 |
| 149118 | XR | NBR | 70 | 354,97 | 5,33 | 4.241,09 |
| 120685 | XR | NBR | 70 | 380,37 | 5,33 | 4.571,14 |
| 135061 | XR | NBR | 70 | 405,26 | 5,33 | 4.982,01 |
| 149119 | XR | NBR | 70 | 430,66 | 5,33 | 6.052,39 |
| 149099 | XR | NBR | 70 | 456,06 | 5,33 | 6.389,62 |
| 149120 | XR | NBR | 70 | 481,46 | 5,33 | 7.354,51 |
| 149123 | XR | NBR | 70 | 557,61 | 5,33 | 10.912,64 |
| 149124 | XR | NBR | 70 | 582,68 | 5,33 | 12.075,59 |
| 149126 | XR | NBR | 70 | 633,48 | 5,33 | 13.808,41 |
| 148985 | XR | NBR | 70 | 658,88 | 5,33 | 14.159,10 |
| 128069 | XR | NBR | 70 | 113,67 | 6,99 | 1.375,40 |
| 128072 | XR | NBR | 70 | 116,84 | 6,99 | 1.412,90 |
| 128073 | XR | NBR | 70 | 120,02 | 6,99 | 1.435,89 |
| 128074 | XR | NBR | 70 | 123,2 | 6,99 | 1.444,70 |
| 128075 | XR | NBR | 70 | 126,37 | 6,99 | 1.445,77 |
| 128076 | XR | NBR | 70 | 129,54 | 6,99 | 1.459,97 |
| 128077 | XR | NBR | 70 | 132,72 | 6,99 | 1.459,97 |
| 128078 | XR | NBR | 70 | 135,9 | 6,99 | 1.517,06 |
| 128079 | XR | NBR | 70 | 139,07 | 6,99 | 1.517,06 |
| 10587 | XR | NBR | 70 | 142,24 | 6,99 | 1.538,82 |
| 74175 | XR | NBR | 70 | 145,42 | 6,99 | 1.560,27 |
| 128080 | XR | NBR | 70 | 148,6 | 6,99 | 1.581,25 |
| 128081 | XR | NBR | 70 | 151,77 | 6,99 | 1.600,71 |
| 128082 | XR | NBR | 70 | 158,12 | 6,99 | 1.666,14 |
| 127749 | XR | NBR | 70 | 164,47 | 6,99 | 1.666,14 |
| 127903 | XR | NBR | 70 | 170,82 | 6,99 | 1.666,14 |
| 73097 | XR | NBR | 70 | 177,17 | 6,99 | 2.181,08 |
| 127750 | XR | NBR | 70 | 183,52 | 6,99 | 2.181,07 |
| 120727 | XR | NBR | 70 | 189,87 | 6,99 | 2.614,86 |
| 128083 | XR | NBR | 70 | 196,22 | 6,99 | 2.651,13 |
| 128084 | XR | NBR | 70 | 202,57 | 6,99 | 2.758,22 |
| 27009 | XR | NBR | 70 | 215,27 | 6,99 | 2.758,21 |
| 128085 | XR | NBR | 70 | 227,97 | 6,99 | 2.772,72 |

| CODICE | TIPO | MAT. | SH | d1 mm | d2 mm | LISTINO 5-2016 X 100 € |
|---|---|---|---|---|---|---|
| 128086 | XR | NBR | 70 | 240,67 | 6,99 | 2.785,84 |
| 128087 | XR | NBR | 70 | 253,37 | 6,99 | 2.867,47 |
| 76634 | XR | NBR | 70 | 266,07 | 6,99 | 3.027,34 |
| 128088 | XR | NBR | 70 | 278,77 | 6,99 | 3.115,15 |
| 74103 | XR | NBR | 70 | 291,47 | 6,99 | 3.219,46 |
| 74313 | XR | NBR | 70 | 304,17 | 6,99 | 3.224,87 |
| 128089 | XR | NBR | 70 | 316,87 | 6,99 | 3.327,17 |
| 128090 | XR | NBR | 70 | 329,57 | 6,99 | 4.541,86 |
| 128091 | XR | NBR | 70 | 342,3 | 6,99 | 4.693,98 |
| 128092 | XR | NBR | 70 | 354,97 | 6,99 | 4.854,15 |
| 128093 | XR | NBR | 70 | 367,67 | 6,99 | 5.016,95 |
| 49618 | XR | NBR | 70 | 380,37 | 6,99 | 5.269,58 |
| 49619 | XR | NBR | 70 | 393,07 | 6,99 | 5.305,37 |
| 128070 | XR | NBR | 70 | 405,26 | 6,99 | 5.361,53 |
| 128071 | XR | NBR | 70 | 417,96 | 6,99 | 5.450,22 |
| 149127 | XR | NBR | 70 | 430,66 | 6,99 | 5.904,70 |
| 149128 | XR | NBR | 70 | 443,36 | 6,99 | 6.025,76 |
| 149129 | XR | NBR | 70 | 456,06 | 6,99 | 6.182,78 |
| 149131 | XR | NBR | 70 | 481,46 | 6,99 | 8.908,04 |
| 149132 | XR | NBR | 70 | 494,16 | 6,99 | 10.636,73 |
| 149133 | XR | NBR | 70 | 506,86 | 6,99 | 12.013,94 |
| 149134 | XR | NBR | 70 | 532,26 | 6,99 | 13.361,85 |
| 144464 | XR | NBR | 70 | 582,68 | 6,99 | 17.852,13 |
| 80681 | XR | NBR | 70 | 608,08 | 6,99 | 18.588,71 |
| 118917 | XR | NBR | 70 | 633,48 | 6,99 | 18.782,77 |
| 149136 | XR | NBR | 70 | 658,88 | 6,99 | 19.339,52 |

# MOVIMENTI ROTANTI

ANELLI DI TENUTA ASSIALI
ANELLI DI TENUTA PER ALBERI ROTANTI
BOCCOLE DI SCORRIMENTO
V-RING

## ANELLI DI TENUTA PER ALBERI ROTANTI

| | | | | | | | | | | | |
|---|---|---|---|---|---|---|---|---|---|---|---|
| DIN | A | AS | AO | | B | BS | BO | AD | BD | C | CS |
| Dichtomatik | WA | WAS | WAO | WASY | WB | WBS | WBO | WAD | WBD | WC | WCS |
| NOK | SC | TC | VC | TCN/V | SB | TB | VB | DC | DB | SA | TA |
| Asia | SC | TC | VC | TCN/V | SB | TB | VB | DC | DB | SA | TA |
| Corcos | BA | BASL | BAOF | BABSL | B1 | B1SL | B1OF | BADUO | B1DUO | B2 | B2SL |
| Dichta | A | AS | AO | ASP | B | BS | BO | AD | BD | C | CS |
| FP | G | GP | GSM | GAP | M | MP | MSM | G2 | M2 | | |
| Rolf | ST | RP | LSM | AP | RM | RM/RP | RM/LSM | RD | RM/RD | RC | |
| Taurus | TG | TGP | TM | | LG | LGP | LM | TGG | LGG | LLG | LLGP |
| Stefa | CB | CC | CD | | BA/BB | BC | BD | CK | BK | DA/DB | DC |
| Goetze | 827N | 827S | | | 822N | 822S | | 827D | 822D | 824N | 824S |
| Kaco | DG | DGS | DE | | DF | DFS | BDF | DGD | DFD | DFK | DFKS |
| Elring | A | AS | ADF | | B | BS | BDF | AD | BD | C | CS |

# Anelli di tenuta assiali

FKM

VRM 01
VRM 02

**VRM 01**

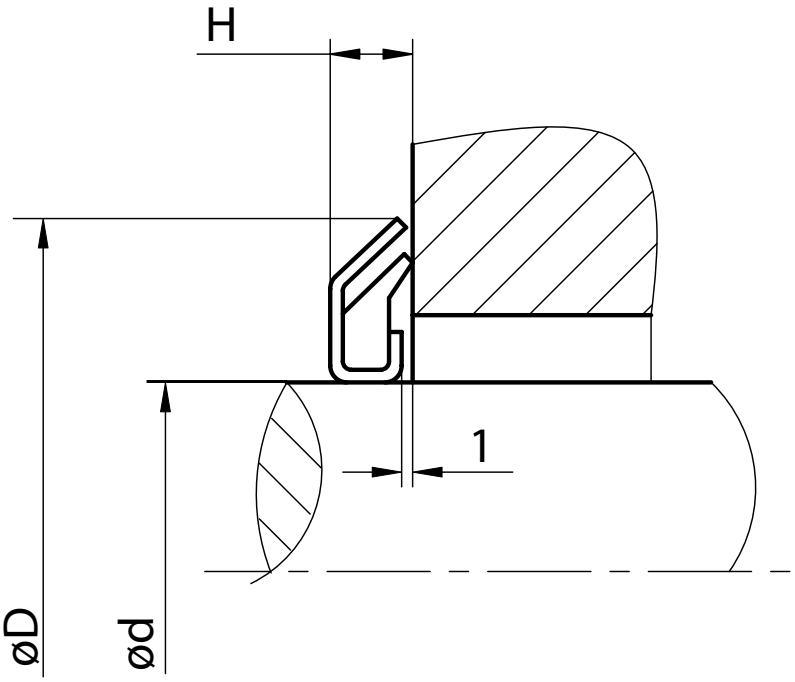


**VRM 02**

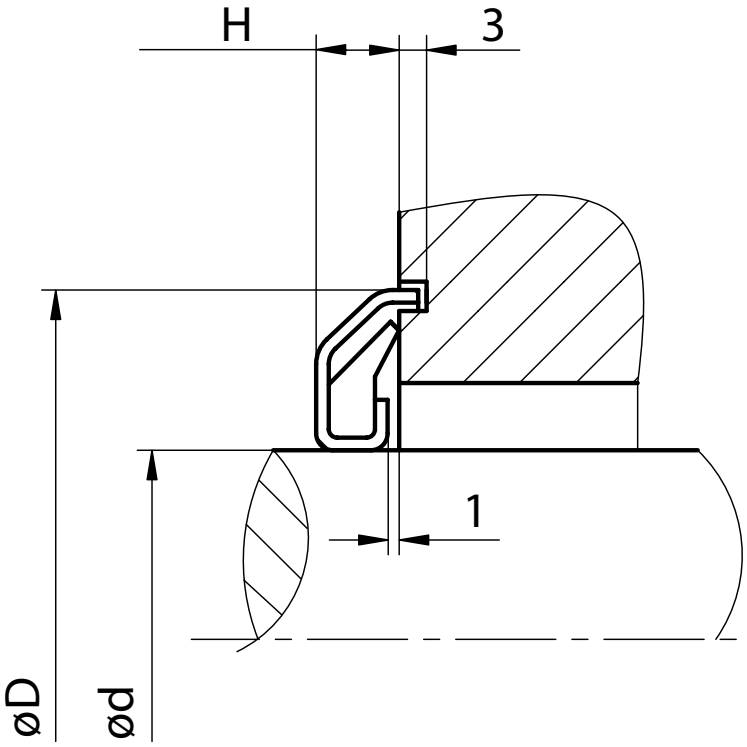

| CODICE | TIPO | MAT. | SPEC. | d mm | D mm | H mm | LISTINO 5-2016 X 100pcs € |
|---|---|---|---|---|---|---|---|
| 104465 | VRM | FKM | 01 | 10 | 24 | 3,5 | 455,94 |
| 104466 | VRM | FKM | 01 | 11 | 26 | 3,5 | 455,94 |
| 104467 | VRM | FKM | 01 | 12 | 26 | 3,5 | 455,94 |
| 104468 | VRM | FKM | 01 | 14 | 30 | 4 | 455,94 |
| 174191 | VRM | FKM | 01 | 15 | 30 | 4 | 455,94 |
| 104470 | VRM | FKM | 01 | 16 | 32 | 4 | 500,52 |
| 104471 | VRM | FKM | 01 | 17 | 32 | 4 | 500,52 |
| 104472 | VRM | FKM | 01 | 18 | 33 | 4 | 500,52 |
| 104473 | VRM | FKM | 01 | 20 | 35 | 4 | 583,94 |
| 104474 | VRM | FKM | 01 | 22 | 40 | 4 | 717,35 |
| 104475 | VRM | FKM | 01 | 24 | 40 | 4 | 717,35 |
| 104477 | VRM | FKM | 01 | 26 | 40 | 4 | 717,35 |
| 104479 | VRM | FKM | 01 | 30 | 47 | 4,5 | 761,84 |
| 104480 | VRM | FKM | 01 | 32 | 49 | 4,5 | 761,21 |
| 174203 | VRM | FKM | 01 | 35 | 52 | 4,5 | 837,53 |
| 104482 | VRM | FKM | 01 | 38 | 55 | 4,5 | 885,85 |
| 174205 | VRM | FKM | 01 | 40 | 57 | 4,5 | 958,69 |
| 104484 | VRM | FKM | 01 | 41 | 57 | 4,5 | 958,70 |
| 104485 | VRM | FKM | 01 | 42 | 59 | 4,5 | 958,70 |
| 174208 | VRM | FKM | 01 | 45 | 62 | 4,5 | 1.066,39 |
| 104487 | VRM | FKM | 01 | 48 | 65 | 4,5 | 1.136,20 |
| 104488 | VRM | FKM | 01 | 50 | 70 | 5,5 | 1.248,90 |
| 104489 | VRM | FKM | 01 | 52 | 72 | 5,5 | 1.263,70 |
| 174212 | VRM | FKM | 01 | 55 | 75 | 5,5 | 1.263,70 |
| 104491 | VRM | FKM | 01 | 58 | 78 | 5,5 | 1.338,41 |
| 174214 | VRM | FKM | 01 | 60 | 80 | 5,5 | 1.425,07 |
| 104493 | VRM | FKM | 01 | 62 | 82 | 5,5 | 1.522,56 |
| 104494 | VRM | FKM | 01 | 65 | 85 | 5,5 | 1.577,97 |
| 104496 | VRM | FKM | 01 | 70 | 90 | 5,5 | 1.883,64 |
| 104497 | VRM | FKM | 01 | 72 | 92 | 5,5 | 1.994,51 |
| 104498 | VRM | FKM | 01 | 75 | 95 | 5,5 | 2.325,81 |
| 174220 | VRM | FKM | 01 | 75 | 95 | 5,5 | 2.325,81 |
| 104499 | VRM | FKM | 01 | 78 | 98 | 5,5 | 2.348,46 |
| 104500 | VRM | FKM | 01 | 80 | 100 | 5,5 | 2.348,46 |
| 104502 | VRM | FKM | 01 | 90 | 110 | 5,5 | 2.353,36 |
| 104503 | VRM | FKM | 01 | 95 | 115 | 5,5 | 2.674,41 |
| 174227 | VRM | FKM | 01 | 105 | 125 | 5,5 | 2.995,01 |
| 104506 | VRM | FKM | 01 | 135 | 159 | 6,5 | 3.469,77 |

| CODICE | TIPO | MAT. | SPEC. | d mm | D mm | H mm | LISTINO 5-2016 X 100pcs € |
|---|---|---|---|---|---|---|---|
| 104507 | VRM | FKM | 02 | 15 | 32 | 4 | 528,78 |
| 104508 | VRM | FKM | 02 | 17 | 34 | 4 | 528,78 |
| 104509 | VRM | FKM | 02 | 20 | 37 | 4 | 528,78 |
| 126618 | VRM | FKM | 02 | 25 | 42 | 4 | 528,78 |
| 126683 | VRM | FKM | 02 | 30 | 48 | 4,5 | 592,44 |
| 174234 | VRM | FKM | 02 | 35 | 53 | 4,5 | 592,44 |
| 174235 | VRM | FKM | 02 | 40 | 58 | 4,5 | 592,44 |
| 104514 | VRM | FKM | 02 | 45 | 63 | 4,5 | 674,20 |
| 174083 | VRM | FKM | 02 | 45 | 63 | 4,5 | 674,02 |
| 174077 | VRM | FKM | 02 | 50 | 72 | 5,5 | 1.496,30 |
| 104516 | VRM | FKM | 02 | 55 | 77 | 5,5 | 1.928,09 |
| 174079 | VRM | FKM | 02 | 60 | 82 | 5,5 | 1.990,76 |
| 104519 | VRM | FKM | 02 | 70 | 92 | 5,5 | 2.033,29 |
| 174239 | VRM | FKM | 02 | 75 | 97 | 5,5 | 2.393,03 |
| 104520 | VRM | FKM | 02 | 80 | 102 | 5,5 | 2.487,36 |
| 104521 | VRM | FKM | 02 | 85 | 107 | 5,5 | 2.995,01 |
| 104523 | VRM | FKM | 02 | 95 | 117 | 5,5 | 3.111,32 |

# Anelli di tenuta assiali

NBR

VRM 01
VRM 02

**VRM 01**

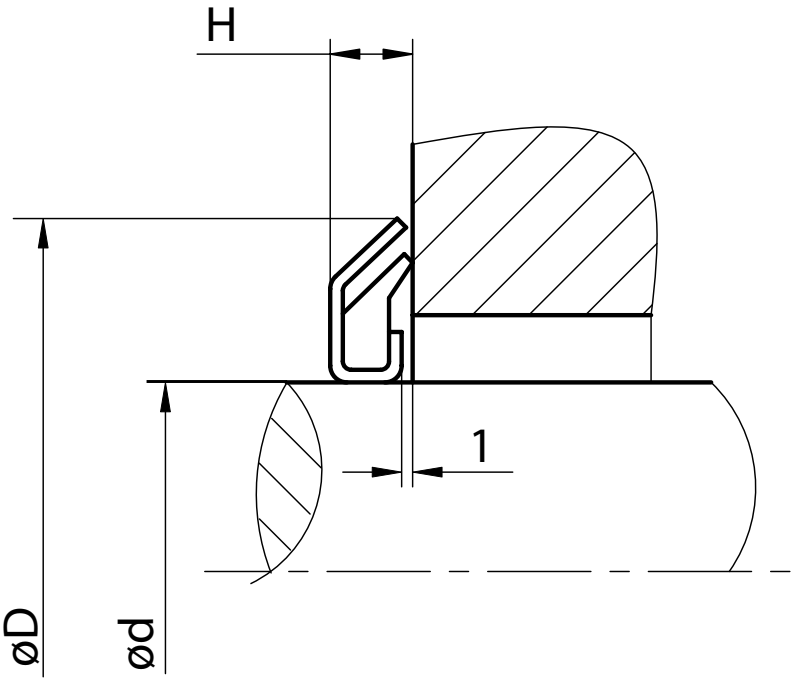


**VRM 02**

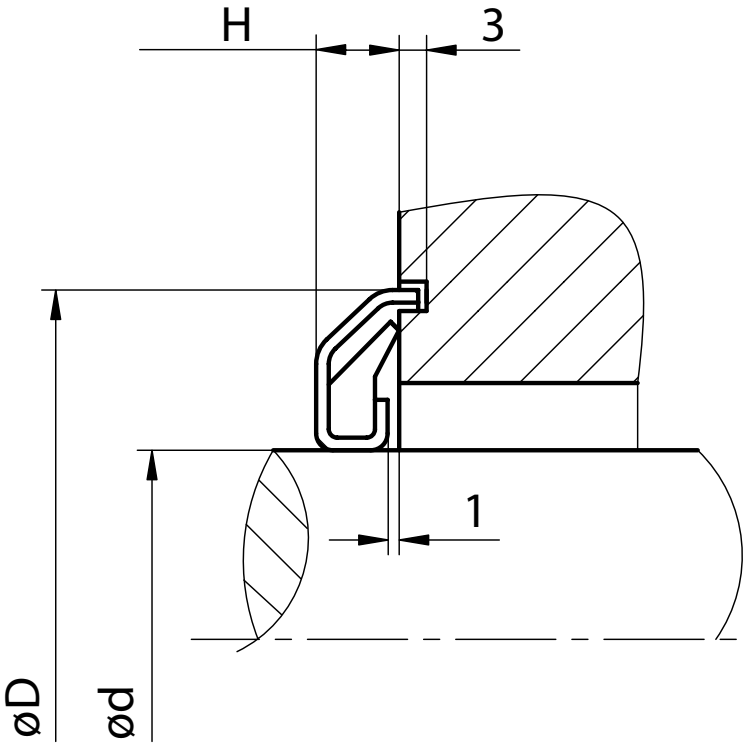

| CODICE | NUOVO CODICE | TIPO | MAT. | SPEC. | d mm | D mm | H mm | LISTINO 5-2016 X 1 pz € |
|---|---|---|---|---|---|---|---|---|
| 126576 | 174131 | VRM | NBR | 01 | 10 | 24 | 3,5 | 179,34 |
| 45826 | 174132 | VRM | NBR | 01 | 11 | 26 | 3,5 | 351,78 |
| 174133 | | VRM | NBR | 01 | 12 | 26 | 3,5 | 524,22 |
| 174134 | | VRM | NBR | 01 | 14 | 30 | 4 | 696,66 |
| 174135 | | VRM | NBR | 01 | 15 | 30 | 4 | 869,10 |
| 174136 | | VRM | NBR | 01 | 16 | 32 | 4 | 1.093,01 |
| 174138 | | VRM | NBR | 01 | 18 | 33 | 4 | 1.273,94 |
| 174078 | 174078 | VRM | NBR | 01 | 20 | 35 | 4 | 1.572,48 |
| 174139 | | VRM | NBR | 01 | 22 | 40 | 4 | 1.768,09 |
| 174140 | | VRM | NBR | 01 | 24 | 40 | 4 | 1.963,68 |
| 174076 | | VRM | NBR | 01 | 25 | 40 | 4 | 2.159,27 |
| 174141 | | VRM | NBR | 01 | 26 | 40 | 4 | 2.354,85 |
| 126584 | 174142 | VRM | NBR | 01 | 28 | 43 | 4 | 2.739,31 |
| 174082 | | VRM | NBR | 01 | 30 | 47 | 4,5 | 3.131,56 |
| 174143 | | VRM | NBR | 01 | 32 | 49 | 4,5 | 3.683,45 |
| 174144 | | VRM | NBR | 01 | 35 | 52 | 4,5 | 3.928,29 |
| 126588 | 174145 | VRM | NBR | 01 | 38 | 55 | 4,5 | 4.370,40 |
| 174146 | | VRM | NBR | 01 | 40 | 57 | 4,5 | 5.065,53 |
| 58863 | 174147 | VRM | NBR | 01 | 41 | 57 | 4,5 | 5.346,41 |
| 174148 | | VRM | NBR | 01 | 42 | 59 | 4,5 | 6.550,04 |
| 174081 | | VRM | NBR | 01 | 45 | 62 | 4,5 | 6.876,88 |
| 174081 | | VRM | NBR | 01 | 45 | 62 | 4,5 | 7.203,84 |
| 174149 | | VRM | NBR | 01 | 48 | 65 | 4,5 | 7.862,82 |
| 174150 | | VRM | NBR | 01 | 50 | 70 | 5,5 | 8.408,36 |
| 126592 | 174151 | VRM | NBR | 01 | 52 | 72 | 5,5 | 9.211,00 |
| 174152 | | VRM | NBR | 01 | 55 | 75 | 5,5 | 10.088,09 |
| 58870 | 174153 | VRM | NBR | 01 | 58 | 78 | 5,5 | 10.942,79 |
| 174154 | | VRM | NBR | 01 | 60 | 80 | 5,5 | 11.787,26 |
| 174155 | | VRM | NBR | 01 | 62 | 82 | 5,5 | 12.641,78 |
| 174156 | | VRM | NBR | 01 | 65 | 85 | 5,5 | 13.330,35 |
| 58874 | 174157 | VRM | NBR | 01 | 68 | 88 | 5,5 | 14.333,26 |
| 174158 | | VRM | NBR | 01 | 70 | 90 | 5,5 | 15.722,04 |
| 58876 | 174159 | VRM | NBR | 01 | 72 | 92 | 5,5 | 17.436,34 |
| 174160 | | VRM | NBR | 01 | 75 | 95 | 5,5 | 19.068,72 |
| 174160 | | VRM | NBR | 01 | 75 | 95 | 5,5 | 19.628,91 |
| 174161 | | VRM | NBR | 01 | 78 | 98 | 5,5 | 21.480,41 |
| 174162 | | VRM | NBR | 01 | 80 | 100 | 5,5 | 23.277,99 |
| 174163 | | VRM | NBR | 01 | 85 | 105 | 5,5 | 24.917,67 |
| 174165 | | VRM | NBR | 01 | 95 | 115 | 5,5 | 31.293,87 |
| 174167 | | VRM | NBR | 01 | 105 | 125 | 5,5 | 37.454,83 |

# ANELLI DI TENUTA ASSIALI

NBR

| CODICE | TIPO | MAT. | SPEC. | d mm | D mm | H mm | LISTINO 5-2016 X 1 pz € |
|---|---|---|---|---|---|---|---|
| 174170 | VRM | NBR | 02 | 17 | 34 | 4 | 211,66 |
| 174171 | VRM | NBR | 02 | 20 | 37 | 4 | 211,66 |
| 174080 | VRM | NBR | 02 | 30 | 48 | 4,5 | 303,20 |
| 174080 | VRM | NBR | 02 | 30 | 48 | 4,5 | 303,45 |
| 174173 | VRM | NBR | 02 | 35 | 53 | 4,5 | 423,69 |
| 174174 | VRM | NBR | 02 | 40 | 58 | 4,5 | 423,69 |
| 174175 | VRM | NBR | 02 | 45 | 63 | 4,5 | 423,70 |
| 174176 | VRM | NBR | 02 | 50 | 72 | 5,5 | 505,12 |
| 174177 | VRM | NBR | 02 | 55 | 77 | ,5 | 557,72 |
| 174178 | VRM | NBR | 02 | 60 | 82 | 5,5 | 580,81 |
| 148770 | VRM | NBR | 02 | 65 | 100 | 5,5 | 1.182,46 |
| 174181 | VRM | NBR | 02 | 75 | 97 | 5,5 | 1.050,20 |
| 174182 | VRM | NBR | 02 | 80 | 102 | 5,5 | 1.182,46 |
| 174183 | VRM | NBR | 02 | 85 | 107 | 5,5 | 1.182,46 |
| 174184 | VRM | NBR | 02 | 90 | 112 | 5,5 | 1.249,87 |
| 174185 | VRM | NBR | 02 | 95 | 117 | 5,5 | 1.351,51 |
| 174186 | VRM | NBR | 02 | 100 | 122 | 5,5 | 1.577,20 |

# Anelli di tenuta per alberi rotanti

FKM

WDR

Anelli di Tenuta

**Tipi standard commercializzati**

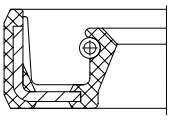

**WA** Tipo standard esterno in gomma

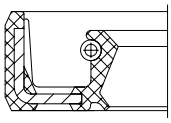

**WAS** Tipo standard con labbro parapolvere

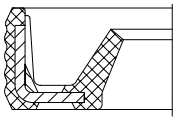

**WAO** Senza molla esterno in gomma

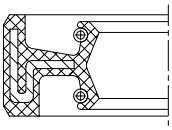

**WAD** Con doppio labbro di tenuta

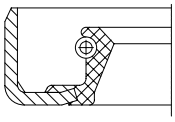

**WB** Esterno in metallo

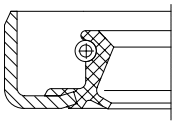

**WBS** Esterno in metallo con labbro parapolvere

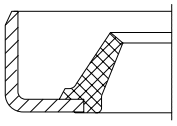

**WBO** Senza molla esterno in metallo

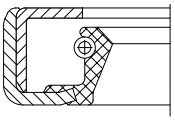

**WC** Esterno in metallo con rinforzo

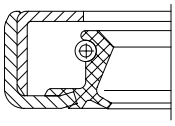

**WCS** Esterno in metallo con rinforzo con labbro parapolvere

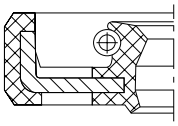

**WASY** Resistente alla pressione

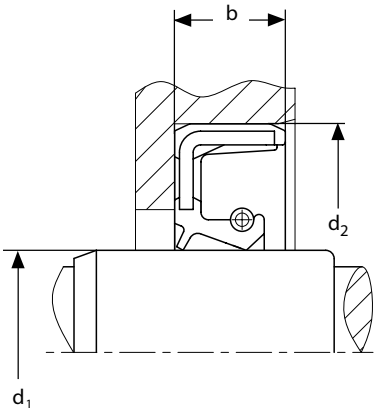

| CODICE | TIPO | MAT. | SPEC. | d1 mm | d2 mm | b mm | LISTINO 5-2016 X 1 pz € |
|---|---|---|---|---|---|---|---|
| 73217 | WDR | FKM | A | 4 | 11 | 6 | 3,86 |
| 77494 | WDR | FKM | A | 4 | 12 | 6 | 3,86 |
| 22550 | WDR | FKM | A | 5 | 16 | 7 | 3,86 |
| 84250 | WDR | FKM | AO | 6 | 10 | 2 | 3,86 |
| 20732 | WDR | FKM | A | 6 | 16 | 6 | 3,86 |
| 20459 | WDR | FKM | A | 6 | 16 | 7 | 3,86 |
| 193369 | WDR | FKM | AS | 6 | 16 | 7 | 4,06 |
| 20733 | WDR | FKM | A | 6 | 19 | 6 | 3,86 |
| 20256 | WDR | FKM | A | 6 | 22 | 7 | 3,86 |
| 37270 | WDR | FKM | A | 6,35 | 19,05 | 6,35 | 3,86 |
| 20257 | WDR | FKM | A | 7 | 16 | 7 | 3,86 |
| 20258 | WDR | FKM | A | 7 | 22 | 7 | 3,86 |
| 20259 | WDR | FKM | A | 8 | 16 | 7 | 3,86 |
| 56736 | WDR | FKM | A | 8 | 18 | 5 | 3,86 |
| 37123 | WDR | FKM | A | 8 | 19 | 7 | 3,86 |
| 83159 | WDR | FKM | A | 8 | 20 | 8 | 3,86 |
| 56737 | WDR | FKM | AS | 8 | 22 | 7 | 4,24 |
| 20260 | WDR | FKM | A | 8 | 22 | 7 | 3,86 |
| 133578 | WDR | FKM | A | 8 | 30 | 7 | 3,86 |
| 62575 | WDR | FKM | A | 8 | 30 | 7 | 3,86 |
| 56738 | WDR | FKM | A | 9 | 22 | 7 | 3,86 |
| 56739 | WDR | FKM | A | 9 | 24 | 7 | 3,86 |
| 62637 | WDR | FKM | A | 9 | 26 | 7 | 3,86 |
| 83160 | WDR | FKM | A | 10 | 16 | 4 | 3,86 |
| 62614 | WDR | FKM | AS | 10 | 18 | 6 | 4,24 |
| 20261 | WDR | FKM | A | 10 | 19 | 7 | 3,86 |
| 56019 | WDR | FKM | A | 10 | 22 | 6 | 3,86 |
| 133579 | WDR | FKM | ASY | 10 | 22 | 6 | 4,67 |
| 20262 | WDR | FKM | A | 10 | 22 | 7 | 3,86 |
| 62619 | WDR | FKM | A | 10 | 22 | 8 | 3,86 |
| 56740 | WDR | FKM | A | 10 | 24 | 7 | 3,86 |
| 62492 | WDR | FKM | A | 10 | 26 | 7 | 3,86 |
| 193375 | WDR | FKM | AS | 10 | 26 | 7 | 4,06 |
| 56741 | WDR | FKM | A | 10 | 28 | 7 | 3,86 |
| 20460 | WDR | FKM | A | 10 | 28 | 8 | 3,86 |
| 20466 | WDR | FKM | A | 10 | 30 | 7 | 3,86 |
| 35204 | WDR | FKM | A | 11 | 17 | 4 | 3,86 |
| 20263 | WDR | FKM | A | 11 | 22 | 7 | 3,86 |
| 62493 | WDR | FKM | A | 11 | 26 | 7 | 3,86 |
| 48943 | WDR | FKM | AO | 12 | 18 | 3 | 4,55 |
| 104189 | WDR | FKM | A | 12 | 18 | 4,5 | 3,86 |
| 62617 | WDR | FKM | A | 12 | 19 | 5 | 3,86 |
| 56742 | WDR | FKM | A | 12 | 22 | 4 | 3,86 |
| 20734 | WDR | FKM | A | 12 | 22 | 4,5 | 3,86 |
| 131168 | WDR | FKM | ASY | 12 | 22 | 6 | 4,67 |
| 20264 | WDR | FKM | A | 12 | 22 | 7 | 3,86 |
| 56743 | WDR | FKM | AS | 12 | 22 | 7 | 4,24 |
| 83161 | WDR | FKM | A | 12 | 24 | 6,5 | 3,86 |
| 34929 | WDR | FKM | A | 12 | 24 | 7 | 3,86 |

| CODICE | TIPO | MAT. | SPEC. | d1 mm | d2 mm | b mm | LISTINO 5-2016 X 1 pz € |
|---|---|---|---|---|---|---|---|
| 62612 | WDR | FKM | AS | 12 | 24 | 7 | 4,24 |
| 68241 | WDR | FKM | A | 12 | 25 | 7 | 3,86 |
| 62633 | WDR | FKM | A | 12 | 25 | 8 | 3,86 |
| 22551 | WDR | FKM | A | 12 | 28 | 7 | 3,86 |
| 76242 | WDR | FKM | AS | 12 | 28 | 7 | 4,69 |
| 22552 | WDR | FKM | A | 12 | 30 | 7 | 3,86 |
| 62576 | WDR | FKM | A | 12 | 30 | 10 | 3,86 |
| 62489 | WDR | FKM | A | 12 | 32 | 7 | 4,26 |
| 115494 | WDR | FKM | A | 12 | 35 | 7 | 3,86 |
| 69946 | WDR | FKM | A | 13 | 26 | 7 | 3,86 |
| 120517 | WDR | FKM | A | 14 | 20 | 5 | 3,86 |
| 195299 | WDR | FKM | A | 14 | 22 | 4 | 3,86 |
| 88549 | WDR | FKM | AS | 14 | 24 | 5 | 4,24 |
| 20265 | WDR | FKM | A | 14 | 24 | 7 | 3,86 |
| 20735 | WDR | FKM | A | 14 | 27 | 7 | 3,86 |
| 62566 | WDR | FKM | A | 14 | 28 | 7 | 3,86 |
| 83162 | WDR | FKM | A | 14 | 28 | 10 | 3,86 |
| 20266 | WDR | FKM | A | 14 | 30 | 7 | 3,86 |
| 62627 | WDR | FKM | A | 15 | 24 | 5 | 3,86 |
| 20267 | WDR | FKM | A | 15 | 24 | 7 | 3,86 |
| 22497 | WDR | FKM | AS | 15 | 24 | 7 | 4,24 |
| 104361 | WDR | FKM | AD | 15 | 24 | 7 | 3,86 |
| 44932 | WDR | FKM | A | 15 | 25 | 5 | 3,86 |
| 150472 | WDR | FKM | ASY | 15 | 25 | 6 | 5,16 |
| 38305 | WDR | FKM | A | 15 | 26 | 7 | 3,86 |
| 62582 | WDR | FKM | AS | 15 | 26 | 7 | 4,69 |
| 62563 | WDR | FKM | A | 15 | 27 | 7 | 3,86 |
| 56747 | WDR | FKM | A | 15 | 28 | 7 | 3,86 |
| 84881 | WDR | FKM | A | 15 | 30 | 6 | 3,86 |
| 20268 | WDR | FKM | A | 15 | 30 | 7 | 3,86 |
| 62584 | WDR | FKM | AS | 15 | 30 | 7 | 4,69 |
| 20269 | WDR | FKM | A | 15 | 30 | 10 | 3,86 |
| 20270 | WDR | FKM | A | 15 | 32 | 7 | 4,26 |
| 133557 | WDR | FKM | ASY | 15 | 35 | 6 | 5,16 |
| 22553 | WDR | FKM | A | 15 | 35 | 7 | 4,26 |
| 82246 | WDR | FKM | AS | 15 | 35 | 7 | 4,69 |
| 62664 | WDR | FKM | A | 15 | 40 | 10 | 4,87 |
| 56749 | WDR | FKM | A | 15 | 42 | 7 | 5,68 |
| 118981 | WDR | FKM | C | 15 | 42 | 10 | 6,72 |
| 27465 | WDR | FKM | A | 15,87 | 25,4 | 4,76 | 4,26 |
| 49505 | WDR | FKM | A | 15,87 | 28,57 | 6,35 | 4,26 |
| 48944 | WDR | FKM | AO | 16 | 22 | 3 | 4,55 |
| 48603 | WDR | FKM | A | 16 | 22,2 | 4 | 4,26 |
| 56750 | WDR | FKM | A | 16 | 24 | 4 | 3,86 |
| 62628 | WDR | FKM | A | 16 | 24 | 5 | 3,86 |
| 62629 | WDR | FKM | A | 16 | 24 | 7 | 3,86 |
| 56730 | WDR | FKM | A | 16 | 26 | 7 | 3,86 |
| 56751 | WDR | FKM | AS | 16 | 28 | 7 | 4,69 |
| 20272 | WDR | FKM | A | 16 | 28 | 7 | 3,86 |

| CODICE | TIPO | MAT. | SPEC. | d1 mm | d2 mm | b mm | LISTINO 5-2016 X 1 pz € |
|---|---|---|---|---|---|---|---|
| 20273 | WDR | FKM | A | 16 | 30 | 7 | 3,86 |
| 62579 | WDR | FKM | A | 16 | 30 | 10 | 8,41 |
| 104319 | WDR | FKM | A | 16 | 32 | 7 | 3,86 |
| 62496 | WDR | FKM | AS | 16 | 32 | 7 | 4,69 |
| 60305 | WDR | FKM | A | 16 | 35 | 7 | 3,86 |
| 62497 | WDR | FKM | AS | 16 | 35 | 7 | 4,69 |
| 20274 | WDR | FKM | A | 16 | 35 | 10 | 4,26 |
| 48604 | WDR | FKM | A | 17 | 25 | 4 | 3,03 |
| 20737 | WDR | FKM | A | 17 | 26 | 6 | 3,86 |
| 62658 | WDR | FKM | A | 17 | 28 | 5 | 3,86 |
| 56752 | WDR | FKM | AS | 17 | 28 | 6 | 4,69 |
| 20275 | WDR | FKM | A | 17 | 28 | 7 | 3,86 |
| 62583 | WDR | FKM | AS | 17 | 28 | 7 | 4,69 |
| 20275 | WDR | FKM | A | 17 | 28 | 7 | 3,86 |
| 20738 | WDR | FKM | A | 17 | 28 | 8 | 3,86 |
| 20276 | WDR | FKM | A | 17 | 30 | 7 | 3,86 |
| 34254 | WDR | FKM | AS | 17 | 30 | 7 | 4,69 |
| 20277 | WDR | FKM | A | 17 | 32 | 7 | 4,26 |
| 62498 | WDR | FKM | AS | 17 | 32 | 7 | 4,48 |
| 20278 | WDR | FKM | A | 17 | 32 | 10 | 3,86 |
| 22554 | WDR | FKM | A | 17 | 35 | 7 | 4,26 |
| 20279 | WDR | FKM | A | 17 | 35 | 10 | 3,86 |
| 62665 | WDR | FKM | A | 17 | 40 | 6 | 3,86 |
| 60304 | WDR | FKM | A | 17 | 40 | 7 | 4,87 |
| 56754 | WDR | FKM | A | 18 | 28 | 6 | 3,86 |
| 88212 | WDR | FKM | AS | 18 | 28 | 6 | 4,69 |
| 20280 | WDR | FKM | A | 18 | 28 | 7 | 3,86 |
| 20281 | WDR | FKM | A | 18 | 30 | 7 | 3,86 |
| 73219 | WDR | FKM | AS | 18 | 30 | 7 | 4,69 |
| 20461 | WDR | FKM | A | 18 | 32 | 7 | 4,26 |
| 40556 | WDR | FKM | AS | 18 | 32 | 7 | 4,69 |
| 62590 | WDR | FKM | A | 18 | 32 | 8 | 4,26 |
| 83096 | WDR | FKM | AS | 18 | 32 | 8 | 4,69 |
| 62499 | WDR | FKM | A | 18 | 35 | 7 | 4,26 |
| 62500 | WDR | FKM | AS | 18 | 35 | 7 | 4,69 |
| 62604 | WDR | FKM | A | 18 | 35 | 8 | 4,26 |
| 44743 | WDR | FKM | A | 18 | 40 | 7 | 4,87 |
| 62639 | WDR | FKM | A | 18 | 40 | 10 | 4,87 |
| 80199 | WDR | FKM | AS | 19 | 30 | 7 | 4,69 |
| 62592 | WDR | FKM | A | 19 | 32 | 7 | 4,26 |
| 130457 | WDR | FKM | AO | 20 | 26 | 3 | 4,55 |
| 48951 | WDR | FKM | AO | 20 | 26 | 4 | 4,55 |
| 48952 | WDR | FKM | AO | 20 | 28 | 4 | 4,55 |
| 62572 | WDR | FKM | A | 20 | 28 | 6 | 3,86 |
| 104222 | WDR | FKM | A | 20 | 28 | 7 | 3,86 |
| 20762 | WDR | FKM | A | 20 | 30 | 5 | 3,86 |
| 20282 | WDR | FKM | A | 20 | 30 | 7 | 3,86 |
| 38946 | WDR | FKM | AS | 20 | 30 | 7 | 4,69 |
| 20283 | WDR | FKM | A | 20 | 32 | 7 | 4,26 |

| CODICE | TIPO | MAT. | SPEC. | d1 mm | d2 mm | b mm | LISTINO 5-2016 X 1 pz € |
|---|---|---|---|---|---|---|---|
| 25717 | WDR | FKM | AS | 20 | 32 | 7 | 4,69 |
| 22555 | WDR | FKM | A | 20 | 33 | 10 | 3,86 |
| 104227 | WDR | FKM | A | 20 | 35 | 5 | 4,26 |
| 80966 | WDR | FKM | ASY | 20 | 35 | 6 | 4,62 |
| 62611 | WDR | FKM | AS | 20 | 35 | 7 | 4,69 |
| 20284 | WDR | FKM | A | 20 | 35 | 7 | 4,26 |
| 62605 | WDR | FKM | A | 20 | 35 | 8 | 4,26 |
| 22556 | WDR | FKM | A | 20 | 35 | 10 | 4,26 |
| 127927 | WDR | FKM | AS | 20 | 35 | 10 | 4,69 |
| 115831 | WDR | FKM | A | 20 | 36 | 8 | 4,26 |
| 62655 | WDR | FKM | A | 20 | 37 | 8 | 4,87 |
| 22557 | WDR | FKM | A | 20 | 38 | 8 | 4,87 |
| 20285 | WDR | FKM | A | 20 | 40 | 7 | 4,87 |
| 22498 | WDR | FKM | AS | 20 | 40 | 7 | 5,35 |
| 20286 | WDR | FKM | A | 20 | 40 | 10 | 4,87 |
| 62677 | WDR | FKM | A | 20 | 42 | 6 | 4,87 |
| 20287 | WDR | FKM | A | 20 | 42 | 7 | 5,26 |
| 62502 | WDR | FKM | AS | 20 | 42 | 7 | 5,79 |
| 22558 | WDR | FKM | A | 20 | 42 | 10 | 5,26 |
| 20288 | WDR | FKM | A | 20 | 47 | 7 | 5,56 |
| 62866 | WDR | FKM | AS | 20 | 47 | 7 | 6,12 |
| 22559 | WDR | FKM | A | 20 | 52 | 7 | 5,96 |
| 62913 | WDR | FKM | A | 20 | 52 | 10 | 5,96 |
| 83165 | WDR | FKM | A | 22 | 30 | 7 | 4,26 |
| 56758 | WDR | FKM | A | 22 | 32 | 5,6 | 4,26 |
| 20291 | WDR | FKM | A | 22 | 32 | 7 | 4,26 |
| 48609 | WDR | FKM | AS | 22 | 35 | 7 | 4,69 |
| 83191 | WDR | FKM | AS | 22 | 35 | 7 | 4,69 |
| 20292 | WDR | FKM | A | 22 | 35 | 7 | 4,26 |
| 22560 | WDR | FKM | A | 22 | 35 | 8 | 4,26 |
| 20293 | WDR | FKM | A | 22 | 38 | 7 | 4,87 |
| 45802 | WDR | FKM | A | 22 | 40 | 5 | 4,87 |
| 56763 | WDR | FKM | AS | 22 | 40 | 7 | 5,35 |
| 20294 | WDR | FKM | A | 22 | 40 | 7 | 4,87 |
| 56764 | WDR | FKM | A | 22 | 40 | 10 | 4,87 |
| 20740 | WDR | FKM | A | 22 | 47 | 7 | 5,56 |
| 62503 | WDR | FKM | A | 24 | 35 | 7 | 4,26 |
| 20462 | WDR | FKM | A | 24 | 36 | 7 | 4,26 |
| 22107 | WDR | FKM | AS | 24 | 36 | 7 | 5,35 |
| 62504 | WDR | FKM | A | 24 | 37 | 7 | 5,06 |
| 22561 | WDR | FKM | A | 24 | 38 | 10 | 4,87 |
| 80967 | WDR | FKM | ASY | 24 | 40 | 6 | 5,84 |
| 20296 | WDR | FKM | A | 24 | 40 | 7 | 4,87 |
| 62688 | WDR | FKM | AS | 24 | 40 | 7 | 5,12 |
| 62679 | WDR | FKM | A | 24 | 42 | 8 | 5,26 |
| 62868 | WDR | FKM | A | 24 | 47 | 7 | 5,68 |
| 84933 | WDR | FKM | AO | 25 | 32 | 4 | 4,55 |
| 83166 | WDR | FKM | A | 25 | 32 | 6 | 4,32 |
| 62609 | WDR | FKM | AS | 25 | 32 | 6 | 4,69 |

| CODICE | TIPO | MAT. | SPEC. | d1 mm | d2 mm | b mm | LISTINO 5-2016 X 1 pz € |
|---|---|---|---|---|---|---|---|
| 39210 | WDR | FKM | A | 25 | 33 | 6 | 4,26 |
| 48612 | WDR | FKM | ASY | 25 | 35 | 6 | 5,16 |
| 20298 | WDR | FKM | A | 25 | 35 | 7 | 4,69 |
| 21966 | WDR | FKM | AS | 25 | 35 | 7 | 4,69 |
| 62653 | WDR | FKM | A | 25 | 36 | 7 | 4,69 |
| 56768 | WDR | FKM | A | 25 | 37 | 5 | 4,87 |
| 62656 | WDR | FKM | A | 25 | 37 | 7 | 4,87 |
| 20299 | WDR | FKM | A | 25 | 38 | 7 | 4,87 |
| 83167 | WDR | FKM | A | 25 | 40 | 5 | 4,87 |
| 20300 | WDR | FKM | A | 25 | 40 | 7 | 4,87 |
| 22500 | WDR | FKM | AS | 25 | 40 | 7 | 5,35 |
| 73221 | WDR | FKM | AS | 25 | 40 | 8 | 5,35 |
| 62671 | WDR | FKM | A | 25 | 40 | 8 | 4,87 |
| 20301 | WDR | FKM | A | 25 | 40 | 10 | 4,87 |
| 62680 | WDR | FKM | A | 25 | 42 | 6 | 6,32 |
| 157214 | WDR | FKM | ASY | 25 | 42 | 6 | 6,38 |
| 20463 | WDR | FKM | A | 25 | 42 | 7 | 5,26 |
| 20774 | WDR | FKM | AS | 25 | 42 | 7 | 5,79 |
| 20302 | WDR | FKM | A | 25 | 42 | 8 | 5,26 |
| 20303 | WDR | FKM | A | 25 | 42 | 10 | 5,26 |
| 62505 | WDR | FKM | A | 25 | 45 | 7 | 5,68 |
| 20304 | WDR | FKM | A | 25 | 45 | 10 | 5,68 |
| 62864 | WDR | FKM | A | 25 | 46 | 7 | 5,68 |
| 34930 | WDR | FKM | A | 25 | 47 | 7 | 5,56 |
| 62872 | WDR | FKM | AS | 25 | 47 | 7 | 6,12 |
| 20305 | WDR | FKM | A | 25 | 47 | 8 | 5,78 |
| 20306 | WDR | FKM | A | 25 | 47 | 10 | 5,56 |
| 56769 | WDR | FKM | A | 25 | 50 | 7 | 5,68 |
| 20307 | WDR | FKM | A | 25 | 50 | 10 | 5,68 |
| 22562 | WDR | FKM | A | 25 | 52 | 7 | 5,96 |
| 56770 | WDR | FKM | AS | 25 | 52 | 7 | 6,55 |
| 62917 | WDR | FKM | A | 25 | 52 | 8 | 5,96 |
| 20308 | WDR | FKM | A | 25 | 52 | 10 | 5,96 |
| 73222 | WDR | FKM | A | 25 | 62 | 7 | 7,48 |
| 82368 | WDR | FKM | AS | 25 | 62 | 7 | 8,24 |
| 20309 | WDR | FKM | A | 25 | 62 | 10 | 8,90 |
| 83192 | WDR | FKM | AS | 25,4 | 44,45 | 9,52 | 6,49 |
| 73957 | WDR | FKM | A | 26 | 34 | 4 | 4,26 |
| 62650 | WDR | FKM | A | 26 | 35 | 7 | 4,26 |
| 56771 | WDR | FKM | A | 26 | 36 | 7 | 5,06 |
| 39719 | WDR | FKM | A | 26 | 37 | 7 | 4,26 |
| 62506 | WDR | FKM | AS | 26 | 37 | 7 | 4,69 |
| 22501 | WDR | FKM | AS | 26 | 42 | 7 | 5,79 |
| 20310 | WDR | FKM | A | 26 | 47 | 7 | 5,56 |
| 22563 | WDR | FKM | A | 27 | 37 | 7 | 4,87 |
| 27548 | WDR | FKM | A | 27 | 41 | 10 | 5,68 |
| 62870 | WDR | FKM | A | 27 | 47 | 8 | 5,56 |
| 20311 | WDR | FKM | A | 27 | 47 | 10 | 5,56 |
| 22564 | WDR | FKM | A | 28 | 38 | 7 | 4,87 |

| CODICE | TIPO | MAT. | SPEC. | d1 mm | d2 mm | b mm | LISTINO 5-2016 X 1 pz € |
|---|---|---|---|---|---|---|---|
| 20312 | WDR | FKM | A | 28 | 40 | 7 | 4,87 |
| 134897 | WDR | FKM | AS | 28 | 40 | 7 | 5,12 |
| 20742 | WDR | FKM | A | 28 | 40 | 10 | 4,87 |
| 56775 | WDR | FKM | A | 28 | 45 | 7 | 5,26 |
| 36911 | WDR | FKM | A | 28 | 47 | 7 | 5,56 |
| 56776 | WDR | FKM | AS | 28 | 47 | 7 | 6,12 |
| 20315 | WDR | FKM | A | 28 | 47 | 10 | 5,56 |
| 22161 | WDR | FKM | AS | 28 | 47 | 10 | 6,12 |
| 20382 | WDR | FKM | A | 28 | 50 | 10 | 5,56 |
| 22502 | WDR | FKM | AS | 28 | 52 | 7 | 6,55 |
| 62920 | WDR | FKM | A | 28 | 52 | 10 | 6,36 |
| 21145 | WDR | FKM | A | 28,57 | 41,27 | 9,52 | 5,33 |
| 61616 | WDR | FKM | BO | 30 | 34 | 3 | 5,77 |
| 73223 | WDR | FKM | A | 30 | 40 | 5 | 4,87 |
| 20316 | WDR | FKM | A | 30 | 40 | 7 | 4,87 |
| 44792 | WDR | FKM | AS | 30 | 40 | 7 | 5,35 |
| 88172 | WDR | FKM | ASY | 30 | 42 | 6 | 5,90 |
| 20317 | WDR | FKM | A | 30 | 42 | 7 | 5,26 |
| 22503 | WDR | FKM | AS | 30 | 42 | 7 | 5,79 |
| 62691 | WDR | FKM | AS | 30 | 42 | 8 | 5,79 |
| 62855 | WDR | FKM | A | 30 | 44 | 10 | 5,26 |
| 104261 | WDR | FKM | A | 30 | 45 | 6 | 5,26 |
| 62641 | WDR | FKM | A | 30 | 45 | 7 | 5,26 |
| 62509 | WDR | FKM | AS | 30 | 45 | 7 | 5,79 |
| 22565 | WDR | FKM | A | 30 | 45 | 8 | 5,26 |
| 62861 | WDR | FKM | AS | 30 | 45 | 8 | 5,79 |
| 20464 | WDR | FKM | A | 30 | 45 | 10 | 5,26 |
| 20318 | WDR | FKM | A | 30 | 47 | 7 | 5,56 |
| 21967 | WDR | FKM | AS | 30 | 47 | 7 | 6,12 |
| 62874 | WDR | FKM | A | 30 | 47 | 8 | 5,56 |
| 20319 | WDR | FKM | A | 30 | 47 | 10 | 5,56 |
| 62510 | WDR | FKM | A | 30 | 50 | 7 | 5,56 |
| 62903 | WDR | FKM | A | 30 | 50 | 8 | 5,56 |
| 20320 | WDR | FKM | A | 30 | 50 | 10 | 5,56 |
| 73224 | WDR | FKM | A | 30 | 52 | 5 | 5,96 |
| 62932 | WDR | FKM | A | 30 | 52 | 6 | 5,96 |
| 20321 | WDR | FKM | A | 30 | 52 | 7 | 5,96 |
| 36444 | WDR | FKM | AS | 30 | 52 | 7 | 6,55 |
| 83556 | WDR | FKM | ASY | 30 | 52 | 7 | 15,43 |
| 20322 | WDR | FKM | A | 30 | 52 | 10 | 5,96 |
| 22504 | WDR | FKM | AS | 30 | 52 | 10 | 6,55 |
| 62925 | WDR | FKM | A | 30 | 52 | 12 | 5,96 |
| 56924 | WDR | FKM | A | 30 | 55 | 7 | 5,96 |
| 76243 | WDR | FKM | AS | 30 | 55 | 7 | 6,55 |
| 20323 | WDR | FKM | A | 30 | 55 | 10 | 5,96 |
| 56778 | WDR | FKM | AS | 30 | 55 | 10 | 6,55 |
| 20324 | WDR | FKM | A | 30 | 56 | 10 | 6,41 |
| 20325 | WDR | FKM | A | 30 | 62 | 7 | 7,48 |
| 63217 | WDR | FKM | AS | 30 | 62 | 7 | 8,24 |

| CODICE | TIPO | MAT. | SPEC. | d1 mm | d2 mm | b mm | LISTINO 5-2016 X 1 pz € |
|---|---|---|---|---|---|---|---|
| 20326 | WDR | FKM | A | 30 | 62 | 10 | 7,48 |
| 56779 | WDR | FKM | AS | 30 | 72 | 8 | 10,54 |
| 62643 | WDR | FKM | A | 30 | 72 | 10 | 8,93 |
| 56777 | WDR | FKM | A | 30,16 | 44,45 | 6,35 | 5,56 |
| 84916 | WDR | FKM | AS | 32 | 40 | 7 | 5,35 |
| 38282 | WDR | FKM | A | 32 | 42 | 7 | 5,68 |
| 20327 | WDR | FKM | A | 32 | 45 | 7 | 5,26 |
| 193381 | WDR | FKM | AS | 32 | 45 | 7 | 5,64 |
| 22567 | WDR | FKM | A | 32 | 45 | 10 | 5,56 |
| 73225 | WDR | FKM | A | 32 | 47 | 6 | 5,56 |
| 115489 | WDR | FKM | AS | 32 | 47 | 6 | 6,12 |
| 56781 | WDR | FKM | AS | 32 | 47 | 7 | 6,12 |
| 24863 | WDR | FKM | A | 32 | 47 | 7 | 5,56 |
| 56781 | WDR | FKM | AS | 32 | 47 | 7 | 6,12 |
| 62895 | WDR | FKM | A | 32 | 47 | 10 | 5,56 |
| 56782 | WDR | FKM | A | 32 | 48 | 8 | 5,56 |
| 88552 | WDR | FKM | AS | 32 | 48 | 8 | 6,12 |
| 62511 | WDR | FKM | A | 32 | 50 | 7 | 5,96 |
| 20328 | WDR | FKM | A | 32 | 50 | 10 | 5,56 |
| 62905 | WDR | FKM | AS | 32 | 50 | 10 | 6,55 |
| 62906 | WDR | FKM | A | 32 | 50 | 12 | 5,96 |
| 62512 | WDR | FKM | A | 32 | 52 | 7 | 5,96 |
| 20329 | WDR | FKM | A | 32 | 52 | 10 | 6,96 |
| 59728 | WDR | FKM | A | 32 | 56 | 10 | 6,66 |
| 22568 | WDR | FKM | A | 32 | 57 | 9,5 | 6,66 |
| 63220 | WDR | FKM | A | 32 | 62 | 10 | 7,48 |
| 22569 | WDR | FKM | A | 32 | 70 | 8 | 10,17 |
| 56783 | WDR | FKM | A | 33 | 45 | 7 | 5,68 |
| 62644 | WDR | FKM | A | 34 | 50 | 10 | 5,96 |
| 22571 | WDR | FKM | A | 34 | 52 | 7,5 | 5,96 |
| 73226 | WDR | FKM | A | 34 | 55 | 10 | 5,96 |
| 76485 | WDR | FKM | A | 34,92 | 49,9 | 9,92 | 6,41 |
| 20744 | WDR | FKM | A | 35 | 45 | 7 | 5,26 |
| 56786 | WDR | FKM | A | 35 | 47 | 6 | 5,56 |
| 20331 | WDR | FKM | A | 35 | 47 | 7 | 5,56 |
| 22505 | WDR | FKM | AS | 35 | 47 | 7 | 6,12 |
| 193283 | WDR | FKM | A | 35 | 47 | 8 | 5,56 |
| 193385 | WDR | FKM | AS | 35 | 47 | 8 | 6,12 |
| 104277 | WDR | FKM | A | 35 | 48 | 8 | 5,96 |
| 20332 | WDR | FKM | A | 35 | 50 | 7 | 5,56 |
| 56787 | WDR | FKM | A | 35 | 50 | 8 | 5,56 |
| 56794 | WDR | FKM | AS | 35 | 50 | 8 | 6,55 |
| 20333 | WDR | FKM | A | 35 | 50 | 10 | 5,56 |
| 62908 | WDR | FKM | AS | 35 | 50 | 10 | 6,55 |
| 22506 | WDR | FKM | AS | 35 | 52 | 6 | 6,55 |
| 20334 | WDR | FKM | A | 35 | 52 | 7 | 5,96 |
| 63165 | WDR | FKM | AS | 35 | 52 | 7 | 6,55 |
| 22507 | WDR | FKM | AS | 35 | 52 | 10 | 6,55 |
| 20335 | WDR | FKM | A | 35 | 52 | 10 | 5,96 |

| CODICE | TIPO | MAT. | SPEC. | d1 mm | d2 mm | b mm | LISTINO 5-2016 X 1 pz € |
|---|---|---|---|---|---|---|---|
| 22572 | WDR | FKM | A | 35 | 54 | 10 | 5,96 |
| 62514 | WDR | FKM | AS | 35 | 55 | 7 | 6,55 |
| 63185 | WDR | FKM | A | 35 | 55 | 8 | 5,96 |
| 73227 | WDR | FKM | AS | 35 | 55 | 10 | 6,96 |
| 20336 | WDR | FKM | A | 35 | 55 | 10 | 5,96 |
| 20337 | WDR | FKM | A | 35 | 56 | 10 | 6,66 |
| 63196 | WDR | FKM | A | 35 | 58 | 10 | 6,66 |
| 63204 | WDR | FKM | A | 35 | 60 | 10 | 6,66 |
| 20338 | WDR | FKM | A | 35 | 62 | 7 | 6,66 |
| 36445 | WDR | FKM | AS | 35 | 62 | 7 | 8,24 |
| 20339 | WDR | FKM | A | 35 | 62 | 10 | 7,48 |
| 104344 | WDR | FKM | AS | 35 | 62 | 10 | 8,24 |
| 63224 | WDR | FKM | AS | 35 | 62 | 12 | 8,24 |
| 24429 | WDR | FKM | A | 35 | 68 | 10 | 8,04 |
| 49578 | WDR | FKM | A | 35 | 72 | 7 | 9,33 |
| 124582 | WDR | FKM | AS | 35 | 72 | 7 | 10,42 |
| 20340 | WDR | FKM | A | 35 | 72 | 10 | 8,93 |
| 81536 | WDR | FKM | AS | 35 | 72 | 10 | 9,83 |
| 63272 | WDR | FKM | A | 35 | 72 | 12 | 10,22 |
| 127007 | WDR | FKM | AS | 35 | 80 | 12 | 10,29 |
| 62515 | WDR | FKM | A | 36 | 47 | 7 | 6,57 |
| 22574 | WDR | FKM | A | 36 | 48 | 10 | 5,56 |
| 83172 | WDR | FKM | A | 36 | 50 | 7 | 5,56 |
| 62516 | WDR | FKM | AS | 36 | 50 | 7 | 5,84 |
| 62517 | WDR | FKM | A | 36 | 52 | 7 | 5,96 |
| 22509 | WDR | FKM | AS | 36 | 52 | 7 | 6,55 |
| 22575 | WDR | FKM | A | 36 | 54 | 7,5 | 7,15 |
| 63192 | WDR | FKM | AS | 36 | 56 | 12 | 8,44 |
| 22510 | WDR | FKM | AS | 36 | 62 | 7 | 8,24 |
| 63256 | WDR | FKM | A | 36 | 68 | 10 | 8,04 |
| 48956 | WDR | FKM | AO | 37 | 47 | 4 | 6,73 |
| 63228 | WDR | FKM | A | 37 | 62 | 8 | 8,90 |
| 20341 | WDR | FKM | A | 38 | 50 | 7 | 5,56 |
| 20342 | WDR | FKM | A | 38 | 52 | 7 | 5,96 |
| 22237 | WDR | FKM | AS | 38 | 52 | 7 | 6,55 |
| 63170 | WDR | FKM | A | 38 | 52 | 10 | 5,96 |
| 63178 | WDR | FKM | A | 38 | 54 | 10 | 5,96 |
| 62518 | WDR | FKM | A | 38 | 55 | 7 | 5,96 |
| 122477 | WDR | FKM | AS | 38 | 55 | 7 | 6,26 |
| 104285 | WDR | FKM | A | 38 | 55 | 10 | 6,96 |
| 63187 | WDR | FKM | AS | 38 | 55 | 10 | 6,55 |
| 20343 | WDR | FKM | A | 38 | 56 | 10 | 6,96 |
| 20344 | WDR | FKM | A | 38 | 60 | 10 | 7,70 |
| 22511 | WDR | FKM | AS | 38 | 62 | 7 | 8,24 |
| 20345 | WDR | FKM | A | 38 | 62 | 10 | 8,90 |
| 73228 | WDR | FKM | AS | 38 | 62 | 10 | 9,35 |
| 36037 | WDR | FKM | A | 38 | 65 | 8 | 7,48 |
| 63275 | WDR | FKM | A | 38 | 72 | 10 | 8,93 |
| 104290 | WDR | FKM | A | 40 | 50 | 7 | 5,56 |

| CODICE | TIPO | MAT. | SPEC. | d1 mm | d2 mm | b mm | LISTINO 5-2016 X 1 pz € |
|---|---|---|---|---|---|---|---|
| 62909 | WDR | FKM | A | 40 | 50 | 8 | 5,56 |
| 56798 | WDR | FKM | A | 40 | 52 | 6 | 6,96 |
| 56561 | WDR | FKM | AS | 40 | 52 | 7 | 6,55 |
| 20346 | WDR | FKM | A | 40 | 52 | 7 | 5,96 |
| 22512 | WDR | FKM | AS | 40 | 55 | 6 | 6,54 |
| 128171 | WDR | FKM | ASY | 40 | 55 | 6 | 6,42 |
| 56697 | WDR | FKM | A | 40 | 55 | 7 | 5,96 |
| 22513 | WDR | FKM | AS | 40 | 55 | 7 | 6,55 |
| 20348 | WDR | FKM | AS | 40 | 55 | 8 | 6,55 |
| 20347 | WDR | FKM | A | 40 | 55 | 8 | 5,96 |
| 63188 | WDR | FKM | A | 40 | 55 | 10 | 5,96 |
| 22577 | WDR | FKM | A | 40 | 56 | 8 | 6,66 |
| 20349 | WDR | FKM | A | 40 | 56 | 10 | 5,96 |
| 75767 | WDR | FKM | AS | 40 | 58 | 8 | 7,33 |
| 20465 | WDR | FKM | A | 40 | 58 | 10 | 6,66 |
| 104295 | WDR | FKM | A | 40 | 60 | 8 | 6,98 |
| 84822 | WDR | FKM | AS | 40 | 60 | 10 | 7,33 |
| 20350 | WDR | FKM | A | 40 | 60 | 10 | 6,66 |
| 48634 | WDR | FKM | ASY | 40 | 62 | 6 | 9,06 |
| 20351 | WDR | FKM | A | 40 | 62 | 7 | 7,48 |
| 20775 | WDR | FKM | AS | 40 | 62 | 7 | 8,24 |
| 193392 | WDR | FKM | AS | 40 | 62 | 8 | 8,24 |
| 20352 | WDR | FKM | A | 40 | 62 | 10 | 7,48 |
| 38948 | WDR | FKM | AS | 40 | 62 | 10 | 8,24 |
| 63230 | WDR | FKM | A | 40 | 62 | 12 | 8,04 |
| 48635 | WDR | FKM | AS | 40 | 62 | 12 | 8,24 |
| 20353 | WDR | FKM | A | 40 | 65 | 10 | 7,48 |
| 60690 | WDR | FKM | AS | 40 | 65 | 10 | 8,24 |
| 63242 | WDR | FKM | A | 40 | 65 | 12 | 8,04 |
| 75825 | WDR | FKM | AS | 40 | 65 | 12 | 8,24 |
| 20354 | WDR | FKM | A | 40 | 68 | 10 | 8,04 |
| 22578 | WDR | FKM | A | 40 | 72 | 7 | 8,93 |
| 48637 | WDR | FKM | AS | 40 | 72 | 7 | 9,83 |
| 128169 | WDR | FKM | ASY | 40 | 72 | 7 | 6,43 |
| 20355 | WDR | FKM | A | 40 | 72 | 10 | 8,93 |
| 73229 | WDR | AS | AS | 40 | 72 | 10 | 9,83 |
| 20355 | WDR | FKM | A | 40 | 72 | 10 | 8,93 |
| 179962 | WDR | FKM | A | 40 | 80 | 7 | 10,52 |
| 22579 | WDR | FKM | A | 40 | 80 | 10 | 9,36 |
| 73230 | WDR | FKM | AS | 40 | 80 | 10 | 9,83 |
| 20745 | WDR | FKM | A | 40 | 85 | 10 | 10,79 |
| 127620 | WDR | FKM | AS | 40 | 85 | 10 | 11,86 |
| 56800 | WDR | FKM | AS | 40 | 90 | 12 | 13,05 |
| 77493 | WDR | FKM | AS | 42 | 55 | 7 | 6,55 |
| 62645 | WDR | FKM | A | 42 | 55 | 7 | 5,96 |
| 35882 | WDR | FKM | A | 42 | 55 | 8 | 5,96 |
| 62522 | WDR | FKM | AS | 42 | 55 | 8 | 6,41 |
| 20356 | WDR | FKM | A | 42 | 56 | 7 | 6,84 |
| 104346 | WDR | FKM | AS | 42 | 60 | 7 | 7,33 |

| CODICE | TIPO | MAT. | SPEC. | d1 mm | d2 mm | b mm | LISTINO 5-2016 X 1 pz € |
|---|---|---|---|---|---|---|---|
| 44553 | WDR | FKM | A | 42 | 60 | 10 | 6,66 |
| 22580 | WDR | FKM | A | 42 | 60 | 12 | 8,01 |
| 22581 | WDR | FKM | A | 42 | 62 | 7 | 7,48 |
| 63231 | WDR | FKM | AS | 42 | 62 | 7 | 8,24 |
| 128172 | WDR | FKM | ASY | 42 | 62 | 7 | 10,09 |
| 56801 | WDR | FKM | AS | 42 | 62 | 8 | 8,24 |
| 37439 | WDR | FKM | A | 42 | 62 | 8 | 7,48 |
| 20357 | WDR | FKM | A | 42 | 62 | 10 | 7,48 |
| 104343 | WDR | FKM | A | 42 | 65 | 8 | 7,48 |
| 20358 | WDR | FKM | A | 42 | 65 | 10 | 7,48 |
| 62524 | WDR | FKM | A | 42 | 72 | 8 | 8,93 |
| 25635 | WDR | FKM | A | 42 | 72 | 10 | 8,93 |
| 63206 | WDR | FKM | A | 43 | 60 | 10 | 7,48 |
| 63233 | WDR | FKM | A | 43 | 62 | 10 | 7,48 |
| 75998 | WDR | FKM | A | 44 | 55 | 7 | 6,81 |
| 63207 | WDR | FKM | A | 44 | 60 | 10 | 6,66 |
| 20359 | WDR | FKM | A | 44 | 65 | 10 | 7,48 |
| 63286 | WDR | FKM | A | 44 | 72 | 10 | 8,93 |
| 120894 | WDR | FKM | A | 44,45 | 61,91 | 7,93 | 8,20 |
| 38148 | WDR | FKM | A | 44,45 | 63,5 | 9,52 | 8,20 |
| 26354 | WDR | FKM | A | 44,45 | 63,5 | 12,7 | 8,20 |
| 56802 | WDR | FKM | AO | 45 | 55 | 4 | 8,34 |
| 20504 | WDR | FKM | A | 45 | 55 | 7 | 6,81 |
| 63201 | WDR | FKM | AS | 45 | 58 | 7 | 7,33 |
| 20360 | WDR | FKM | A | 45 | 60 | 7 | 6,66 |
| 63208 | WDR | FKM | AS | 45 | 60 | 7 | 7,33 |
| 44088 | WDR | FKM | A | 45 | 60 | 8 | 6,66 |
| 62526 | WDR | FKM | AS | 45 | 60 | 8 | 7,33 |
| 22583 | WDR | FKM | A | 45 | 60 | 10 | 6,66 |
| 129768 | WDR | FKM | ASY | 45 | 62 | 6 | 10,09 |
| 20746 | WDR | FKM | A | 45 | 62 | 7 | 7,48 |
| 21208 | WDR | FKM | AS | 45 | 62 | 7 | 8,24 |
| 20361 | WDR | FKM | A | 45 | 62 | 8 | 7,48 |
| 56698 | WDR | FKM | AS | 45 | 62 | 8 | 8,24 |
| 20362 | WDR | FKM | A | 45 | 62 | 10 | 7,48 |
| 22584 | WDR | FKM | A | 45 | 62 | 12 | 8,90 |
| 92854 | WDR | FKM | ASY | 45 | 65 | 7 | 10,09 |
| 62527 | WDR | FKM | AS | 45 | 65 | 8 | 8,24 |
| 20363 | WDR | FKM | A | 45 | 65 | 8 | 7,48 |
| 20364 | WDR | FKM | A | 45 | 65 | 10 | 7,48 |
| 63245 | WDR | FKM | AS | 45 | 65 | 10 | 8,24 |
| 63246 | WDR | FKM | A | 45 | 65 | 12 | 7,48 |
| 44796 | WDR | FKM | A | 45 | 68 | 10 | 7,48 |
| 20365 | WDR | FKM | A | 45 | 70 | 12 | 9,50 |
| 36447 | WDR | FKM | A | 45 | 72 | 8 | 8,93 |
| 36448 | WDR | FKM | AS | 45 | 72 | 8 | 9,83 |
| 20366 | WDR | FKM | A | 45 | 72 | 10 | 8,93 |
| 60352 | WDR | FKM | AS | 45 | 72 | 10 | 9,83 |
| 62528 | WDR | FKM | AS | 45 | 75 | 8 | 9,83 |

| CODICE | TIPO | MAT. | SPEC. | d1 mm | d2 mm | b mm | LISTINO 5-2016 X 1 pz € |
|---|---|---|---|---|---|---|---|
| 56804 | WDR | FKM | AS | 45 | 75 | 10 | 9,83 |
| 56803 | WDR | FKM | A | 45 | 75 | 10 | 8,93 |
| 73231 | WDR | FKM | AS | 45 | 80 | 10 | 10,29 |
| 22585 | WDR | FKM | A | 45 | 80 | 10 | 9,36 |
| 62646 | WDR | FKM | A | 45 | 85 | 10 | 10,79 |
| 74479 | WDR | FKM | AS | 45 | 85 | 10 | 11,33 |
| 63343 | WDR | FKM | AS | 45 | 90 | 10 | 13,05 |
| 48646 | WDR | FKM | A | 47 | 62 | 6 | 9,33 |
| 48648 | WDR | FKM | ASY | 47 | 62 | 7 | 10,86 |
| 20368 | WDR | FKM | A | 47 | 65 | 10 | 9,34 |
| 63289 | WDR | FKM | A | 47 | 72 | 9 | 8,93 |
| 56799 | WDR | FKM | AS | 48 | 60 | 10 | 7,53 |
| 48649 | WDR | FKM | AS | 48 | 62 | 8 | 8,24 |
| 20369 | WDR | FKM | A | 48 | 62 | 8 | 7,48 |
| 63235 | WDR | FKM | A | 48 | 62 | 10 | 7,48 |
| 62529 | WDR | FKM | AS | 48 | 65 | 8 | 8,84 |
| 22514 | WDR | FKM | AS | 48 | 65 | 10 | 8,84 |
| 20467 | WDR | FKM | A | 48 | 65 | 10 | 7,48 |
| 104322 | WDR | FKM | A | 48 | 68 | 8 | 7,48 |
| 62530 | WDR | FKM | AS | 48 | 68 | 8 | 8,84 |
| 63261 | WDR | FKM | A | 48 | 68 | 12 | 7,48 |
| 62532 | WDR | FKM | A | 48 | 72 | 8 | 8,93 |
| 22515 | WDR | FKM | AS | 48 | 72 | 8 | 9,83 |
| 20371 | WDR | FKM | A | 48 | 72 | 10 | 8,93 |
| 20372 | WDR | FKM | A | 48 | 80 | 10 | 9,36 |
| 63341 | WDR | FKM | A | 48 | 90 | 10 | 11,85 |
| 48958 | WDR | FKM | AO | 50 | 58 | 4 | 8,34 |
| 56806 | WDR | FKM | A | 50 | 60 | 7 | 6,66 |
| 20373 | WDR | FKM | A | 50 | 62 | 7 | 7,48 |
| 118798 | WDR | FKM | A | 50 | 62 | 8 | 7,48 |
| 87185 | WDR | FKM | ASY | 50 | 65 | 7 | 11,17 |
| 20374 | WDR | FKM | A | 50 | 65 | 8 | 7,48 |
| 22516 | WDR | FKM | AS | 50 | 65 | 8 | 8,24 |
| 63248 | WDR | FKM | A | 50 | 65 | 10 | 7,48 |
| 157217 | WDR | FKM | ASY | 50 | 68 | 7 | 20,07 |
| 20748 | WDR | FKM | A | 50 | 68 | 8 | 8,04 |
| 56808 | WDR | FKM | AS | 50 | 68 | 8 | 8,84 |
| 20375 | WDR | FKM | A | 50 | 68 | 10 | 8,04 |
| 83193 | WDR | FKM | AS | 50 | 68 | 10 | 8,84 |
| 62533 | WDR | FKM | A | 50 | 70 | 8 | 8,04 |
| 20376 | WDR | FKM | A | 50 | 70 | 10 | 8,04 |
| 38949 | WDR | FKM | AS | 50 | 70 | 10 | 8,84 |
| 20377 | WDR | FKM | A | 50 | 70 | 12 | 9,54 |
| 22517 | WDR | FKM | AS | 50 | 72 | 7 | 9,83 |
| 36449 | WDR | FKM | AS | 50 | 72 | 8 | 9,83 |
| 20378 | WDR | FKM | A | 50 | 72 | 8 | 8,93 |
| 20379 | WDR | FKM | A | 50 | 72 | 10 | 8,93 |
| 22518 | WDR | FKM | AS | 50 | 72 | 10 | 9,83 |
| 22587 | WDR | FKM | A | 50 | 72 | 12 | 8,93 |

| CODICE | TIPO | MAT. | SPEC. | d1 mm | d2 mm | b mm | LISTINO 5-2016 X 1 pz € |
|---|---|---|---|---|---|---|---|
| 48650 | WDR | FKM | AS | 50 | 72 | 12 | 9,83 |
| 81390 | WDR | FKM | C | 50 | 72 | 12 | 16,34 |
| 69906 | WDR | FKM | A | 50 | 75 | 10 | 8,93 |
| 48653 | WDR | FKM | AS | 50 | 75 | 10 | 9,83 |
| 63298 | WDR | FKM | A | 50 | 75 | 12 | 8,93 |
| 20380 | WDR | FKM | A | 50 | 80 | 8 | 9,36 |
| 22519 | WDR | FKM | AS | 50 | 80 | 8 | 10,29 |
| 20381 | WDR | FKM | A | 50 | 80 | 10 | 9,78 |
| 63309 | WDR | FKM | AS | 50 | 80 | 10 | 10,29 |
| 35703 | WDR | FKM | C | 50 | 80 | 10 | 17,52 |
| 22520 | WDR | FKM | AS | 50 | 80 | 13 | 11,42 |
| 20383 | WDR | FKM | A | 50 | 90 | 10 | 11,85 |
| 121798 | WDR | FKM | AS | 50 | 90 | 10 | 12,44 |
| 121799 | WDR | FKM | AS | 50 | 110 | 10 | 17,55 |
| 38149 | WDR | FKM | A | 50,8 | 69,85 | 9,52 | 10,09 |
| 20484 | WDR | FKM | A | 52 | 62 | 8 | 7,48 |
| 20468 | WDR | FKM | A | 52 | 68 | 8 | 8,04 |
| 62531 | WDR | FKM | AS | 52 | 68 | 8 | 8,84 |
| 63267 | WDR | FKM | A | 52 | 69 | 10 | 8,04 |
| 20384 | WDR | FKM | A | 52 | 72 | 8 | 8,93 |
| 22521 | WDR | FKM | AS | 52 | 72 | 8 | 9,83 |
| 20385 | WDR | FKM | A | 52 | 72 | 10 | 10,51 |
| 73232 | WDR | FKM | A | 52 | 75 | 10 | 8,93 |
| 22588 | WDR | FKM | A | 52 | 75 | 12 | 8,93 |
| 22589 | WDR | FKM | A | 54 | 70 | 12 | 9,54 |
| 22591 | WDR | FKM | A | 54 | 90 | 13 | 11,85 |
| 83177 | WDR | FKM | A | 55 | 68 | 8 | 8,04 |
| 22522 | WDR | FKM | AS | 55 | 70 | 8 | 8,84 |
| 20387 | WDR | FKM | A | 55 | 70 | 8 | 8,04 |
| 20388 | WDR | FKM | A | 55 | 70 | 10 | 8,04 |
| 38950 | WDR | FKM | AS | 55 | 70 | 10 | 8,84 |
| 48655 | WDR | FKM | ASY | 55 | 72 | 7 | 13,93 |
| 20389 | WDR | FKM | A | 55 | 72 | 8 | 8,93 |
| 56811 | WDR | FKM | AS | 55 | 72 | 8 | 9,83 |
| 134888 | WDR | FKM | ASY | 55 | 72 | 8 | 10,81 |
| 20390 | WDR | FKM | A | 55 | 72 | 10 | 8,93 |
| 22523 | WDR | FKM | AS | 55 | 72 | 10 | 9,83 |
| 36701 | WDR | | A | 55 | 75 | 8 | 9,35 |
| 62534 | WDR | FKM | AS | 55 | 75 | 8 | 9,83 |
| 20391 | WDR | FKM | A | 55 | 75 | 10 | 8,93 |
| 63299 | WDR | FKM | AS | 55 | 75 | 10 | 9,83 |
| 22592 | WDR | FKM | A | 55 | 75 | 12 | 8,93 |
| 63303 | WDR | FKM | A | 55 | 78 | 10 | 9,36 |
| 121129 | WDR | FKM | AG | 55 | 78 | 10 | 13,93 |
| 83194 | WDR | FKM | AS | 55 | 78 | 12 | 10,29 |
| 20392 | WDR | FKM | A | 55 | 80 | 8 | 9,36 |
| 36453 | WDR | FKM | AS | 55 | 80 | 8 | 10,29 |
| 56232 | WDR | FKM | AS | 55 | 80 | 10 | 10,29 |
| 20393 | WDR | FKM | A | 55 | 80 | 10 | 9,36 |

| CODICE | TIPO | MAT. | SPEC. | d1 mm | d2 mm | b mm | LISTINO 5-2016 X 1 pz € |
|---|---|---|---|---|---|---|---|
| 56232 | WDR | FKM | AS | 55 | 80 | 10 | 10,29 |
| 26934 | WDR | FKM | A | 55 | 85 | 8 | 10,79 |
| 63326 | WDR | FKM | AS | 55 | 85 | 10 | 11,86 |
| 62535 | WDR | FKM | A | 55 | 85 | 10 | 10,79 |
| 20395 | WDR | FKM | A | 55 | 85 | 13 | 10,79 |
| 20396 | WDR | FKM | A | 55 | 90 | 10 | 11,85 |
| 63344 | WDR | FKM | AS | 55 | 90 | 10 | 13,05 |
| 152972 | WDR | FKM | AS | 55 | 100 | 10 | 14,01 |
| 34294 | WDR | FKM | A | 55 | 100 | 13 | 15,64 |
| 56812 | WDR | FKM | A | 56 | 70 | 8 | 9,54 |
| 20397 | WDR | FKM | A | 56 | 72 | 8 | 8,93 |
| 62537 | WDR | FKM | AS | 56 | 72 | 8 | 9,83 |
| 63292 | WDR | FKM | A | 56 | 72 | 10 | 8,93 |
| 62538 | WDR | FKM | A | 56 | 80 | 8 | 9,36 |
| 36884 | WDR | FKM | A | 56 | 85 | 8 | 10,79 |
| 20398 | WDR | FKM | A | 58 | 72 | 8 | 8,93 |
| 513715 | WDR | FKM | AS | 58 | 72 | 8 | 9,38 |
| 22594 | WDR | FKM | A | 58 | 75 | 8 | 10,51 |
| 22595 | WDR | FKM | A | 58 | 80 | 8 | 9,88 |
| 22238 | WDR | FKM | AS | 58 | 80 | 9 | 11,42 |
| 20399 | WDR | FKM | A | 58 | 80 | 10 | 9,36 |
| 63329 | WDR | FKM | A | 58 | 85 | 10 | 10,79 |
| 63346 | WDR | FKM | A | 58 | 90 | 10 | 11,85 |
| 73233 | WDR | FKM | A | 60 | 72 | 8 | 8,93 |
| 20400 | WDR | FKM | A | 60 | 75 | 8 | 8,93 |
| 22525 | WDR | FKM | AS | 60 | 75 | 8 | 9,83 |
| 22596 | WDR | FKM | A | 60 | 75 | 10 | 10,51 |
| 35753 | WDR | FKM | A | 60 | 78 | 10 | 11,42 |
| 22526 | WDR | FKM | AS | 60 | 80 | 7 | 10,29 |
| 36454 | WDR | FKM | AS | 60 | 80 | 8 | 10,29 |
| 20401 | WDR | FKM | A | 60 | 80 | 8 | 9,36 |
| 21156 | WDR | FKM | AS | 60 | 80 | 10 | 10,29 |
| 20402 | WDR | FKM | A | 60 | 80 | 10 | 9,36 |
| 39761 | WDR | FKM | A | 60 | 80 | 12 | 9,79 |
| 21666 | WDR | FKM | AS | 60 | 80 | 12 | 10,29 |
| 56817 | WDR | FKM | A | 60 | 85 | 8 | 10,79 |
| 83195 | WDR | FKM | AS | 60 | 85 | 8 | 11,86 |
| 20403 | WDR | FKM | A | 60 | 85 | 10 | 10,79 |
| 21157 | WDR | FKM | AS | 60 | 85 | 10 | 11,86 |
| 63331 | WDR | FKM | A | 60 | 85 | 13 | 10,79 |
| 62539 | WDR | FKM | AS | 60 | 90 | 8 | 12,45 |
| 35517 | WDR | FKM | A | 60 | 90 | 8 | 11,85 |
| 20404 | WDR | FKM | A | 60 | 90 | 10 | 11,85 |
| 56818 | WDR | FKM | AS | 60 | 90 | 10 | 13,05 |
| 20405 | WDR | FKM | A | 60 | 90 | 13 | 13,32 |
| 20406 | WDR | FKM | A | 60 | 95 | 10 | 12,62 |
| 63358 | WDR | FKM | A | 60 | 100 | 10 | 13,65 |
| 56819 | WDR | FKM | A | 60 | 110 | 13 | 17,95 |
| 48657 | WDR | FKM | A | 60 | 130 | 12 | 28,92 |

| CODICE | TIPO | MAT. | SPEC. | d1 mm | d2 mm | b mm | LISTINO 5-2016 X 1 pz € |
|---|---|---|---|---|---|---|---|
| 61337 | WDR | FKM | A | 61 | 75 | 8 | 10,51 |
| 73234 | WDR | FKM | A | 62 | 80 | 10 | 9,36 |
| 20407 | WDR | FKM | A | 62 | 85 | 10 | 10,79 |
| 20749 | WDR | FKM | A | 62 | 85 | 12 | 12,06 |
| 62540 | WDR | FKM | A | 62 | 90 | 10 | 11,85 |
| 192617 | WDR | FKM | AS | 62 | 90 | 10 | 12,45 |
| 22527 | WDR | FKM | AS | 63 | 85 | 10 | 11,86 |
| 20471 | WDR | FKM | A | 63 | 85 | 10 | 10,79 |
| 62541 | WDR | FKM | A | 63 | 90 | 10 | 11,85 |
| 63316 | WDR | FKM | A | 64 | 80 | 8 | 9,36 |
| 63349 | WDR | FKM | AS | 64 | 90 | 13 | 13,05 |
| 20408 | WDR | FKM | A | 65 | 80 | 8 | 9,36 |
| 56826 | WDR | FKM | AS | 65 | 80 | 8 | 9,83 |
| 20409 | WDR | FKM | A | 65 | 80 | 10 | 10,16 |
| 22528 | WDR | FKM | AS | 65 | 80 | 10 | 10,29 |
| 63317 | WDR | FKM | A | 65 | 80 | 12 | 9,36 |
| 56827 | WDR | FKM | A | 65 | 85 | 8 | 10,79 |
| 20410 | WDR | FKM | A | 65 | 85 | 10 | 10,79 |
| 36446 | WDR | FKM | AS | 65 | 85 | 10 | 11,86 |
| 22529 | WDR | FKM | AS | 65 | 85 | 13 | 11,86 |
| 20411 | WDR | FKM | A | 65 | 90 | 10 | 11,85 |
| 22530 | WDR | FKM | AS | 65 | 90 | 10 | 13,05 |
| 63350 | WDR | FKM | A | 65 | 90 | 13 | 11,85 |
| 20750 | WDR | FKM | A | 65 | 100 | 10 | 13,65 |
| 62545 | WDR | FKM | AS | 65 | 100 | 10 | 14,33 |
| 156945 | WDR | FKM | AS | 65 | 100 | 12 | 15,02 |
| 20412 | WDR | FKM | A | 68 | 90 | 10 | 11,85 |
| 22531 | WDR | FKM | AS | 68 | 90 | 10 | 13,05 |
| 20413 | WDR | FKM | A | 68 | 100 | 10 | 15,41 |
| 83179 | WDR | FKM | A | 70 | 85 | 7 | 11,48 |
| 20414 | WDR | FKM | A | 70 | 85 | 8 | 10,79 |
| 63335 | WDR | FKM | AS | 70 | 85 | 8 | 11,21 |
| 20415 | WDR | FKM | A | 70 | 90 | 10 | 11,85 |
| 22532 | WDR | FKM | AS | 70 | 90 | 10 | 13,05 |
| 56833 | WDR | FKM | A | 70 | 90 | 12 | 11,85 |
| 84926 | WDR | FKM | AS | 70 | 90 | 12 | 13,05 |
| 20472 | WDR | FKM | A | 70 | 90 | 13 | 11,85 |
| 83196 | WDR | FKM | AS | 70 | 90 | 13 | 15,53 |
| 20473 | WDR | FKM | A | 70 | 95 | 10 | 12,62 |
| 62546 | WDR | FKM | AS | 70 | 95 | 10 | 14,20 |
| 20418 | WDR | FKM | A | 70 | 95 | 13 | 16,14 |
| 22534 | WDR | FKM | AS | 70 | 100 | 10 | 15,02 |
| 20419 | WDR | FKM | A | 70 | 100 | 10 | 13,65 |
| 20420 | WDR | FKM | A | 70 | 100 | 12 | 13,65 |
| 56834 | WDR | FKM | A | 70 | 110 | 10 | 15,97 |
| 63466 | WDR | FKM | A | 70 | 110 | 12 | 15,97 |
| 63474 | WDR | FKM | A | 70 | 110 | 13 | 15,97 |
| 63481 | WDR | FKM | A | 70 | 120 | 13 | 19,53 |
| 192286 | WDR | FKM | AS | 70 | 125 | 12 | 16,81 |

| CODICE | TIPO | MAT. | SPEC. | d1 mm | d2 mm | b mm | LISTINO 5-2016 X 1 pz € |
|---|---|---|---|---|---|---|---|
| 83180 | WDR | FKM | A | 72 | 90 | 10 | 10,40 |
| 20474 | WDR | FKM | A | 72 | 95 | 10 | 12,62 |
| 62547 | WDR | FKM | A | 72 | 100 | 10 | 13,65 |
| 62548 | WDR | FKM | AS | 72 | 100 | 10 | 17,46 |
| 63454 | WDR | FKM | A | 72 | 100 | 13 | 13,65 |
| 20421 | WDR | FKM | A | 75 | 90 | 8 | 11,85 |
| 83197 | WDR | FKM | AS | 75 | 90 | 8 | 12,44 |
| 20422 | WDR | FKM | A | 75 | 90 | 10 | 11,85 |
| 20423 | WDR | FKM | A | 75 | 95 | 10 | 12,62 |
| 22535 | WDR | FKM | AS | 75 | 95 | 10 | 14,20 |
| 20424 | WDR | FKM | A | 75 | 95 | 12 | 12,62 |
| 20425 | WDR | FKM | A | 75 | 100 | 10 | 13,65 |
| 22536 | WDR | FKM | AS | 75 | 100 | 10 | 15,02 |
| 56835 | WDR | FKM | A | 75 | 100 | 12 | 13,65 |
| 59397 | WDR | FKM | AS | 75 | 100 | 12 | 14,33 |
| 22599 | WDR | FKM | A | 75 | 110 | 12 | 17,95 |
| 22600 | WDR | FKM | A | 75 | 110 | 13 | 15,97 |
| 63482 | WDR | FKM | A | 75 | 120 | 12 | 17,83 |
| 143474 | WDR | FKM | A | 75 | 130 | 13 | 22,58 |
| 20427 | WDR | FKM | A | 78 | 100 | 10 | 13,65 |
| 20481 | WDR | FKM | A | 80 | 95 | 8 | 13,65 |
| 35355 | WDR | FKM | AS | 80 | 100 | 10 | 15,02 |
| 20428 | WDR | FKM | A | 80 | 100 | 10 | 13,65 |
| 62549 | WDR | FKM | A | 80 | 100 | 12 | 13,65 |
| 22537 | WDR | FKM | AS | 80 | 100 | 13 | 15,02 |
| 63456 | WDR | FKM | A | 80 | 100 | 13 | 13,65 |
| 63462 | WDR | FKM | A | 80 | 105 | 10 | 15,97 |
| 20505 | WDR | FKM | A | 80 | 105 | 12 | 15,97 |
| 22538 | WDR | FKM | AS | 80 | 110 | 10 | 17,55 |
| 62550 | WDR | FKM | A | 80 | 110 | 10 | 15,97 |
| 20429 | WDR | FKM | A | 80 | 110 | 12 | 15,97 |
| 56837 | WDR | FKM | A | 80 | 115 | 12 | 17,83 |
| 63483 | WDR | FKM | A | 80 | 120 | 13 | 17,83 |
| 63492 | WDR | FKM | A | 80 | 125 | 12 | 20,52 |
| 20430 | WDR | FKM | A | 82 | 105 | 13 | 18,97 |
| 104316 | WDR | FKM | A | 83 | 110 | 13 | 15,97 |
| 104323 | WDR | FKM | A | 85 | 105 | 12 | 16,35 |
| 62551 | WDR | FKM | AS | 85 | 105 | 12 | 17,55 |
| 60338 | WDR | FKM | A | 85 | 105 | 13 | 16,35 |
| 69609 | WDR | FKM | A | 85 | 110 | 10 | 15,97 |
| 20431 | WDR | FKM | A | 85 | 110 | 12 | 15,97 |
| 22539 | WDR | FKM | AS | 85 | 110 | 12 | 17,55 |
| 63469 | WDR | FKM | A | 85 | 110 | 13 | 15,97 |
| 63470 | WDR | FKM | AS | 85 | 110 | 13 | 17,55 |
| 63478 | WDR | FKM | A | 85 | 115 | 13 | 17,83 |
| 22540 | WDR | FKM | AS | 85 | 120 | 12 | 21,25 |
| 23736 | WDR | FKM | A | 85 | 120 | 12 | 17,83 |
| 63493 | WDR | FKM | A | 85 | 125 | 12 | 20,52 |
| 63502 | WDR | FKM | AS | 85 | 130 | 12 | 22,57 |

| CODICE | TIPO | MAT. | SPEC. | d1 mm | d2 mm | b mm | LISTINO 5-2016 X 1 pz € |
|---|---|---|---|---|---|---|---|
| 22541 | WDR | FKM | AS | 85 | 130 | 13 | 22,57 |
| 63472 | WDR | FKM | A | 88 | 110 | 13 | 15,97 |
| 75066 | WDR | FKM | A | 90 | 110 | 10 | 15,97 |
| 20434 | WDR | FKM | A | 90 | 110 | 12 | 15,97 |
| 56838 | WDR | FKM | AS | 90 | 110 | 12 | 17,55 |
| 56839 | WDR | FKM | AS | 90 | 110 | 13 | 17,55 |
| 44008 | WDR | FKM | A | 90 | 115 | 12 | 17,83 |
| 63479 | WDR | FKM | A | 90 | 115 | 13 | 17,83 |
| 20435 | WDR | FKM | A | 90 | 120 | 12 | 17,83 |
| 157489 | WDR | FKM | AS | 90 | 120 | 12 | 18,72 |
| 56840 | WDR | FKM | A | 90 | 120 | 13 | 17,83 |
| 63494 | WDR | FKM | A | 90 | 125 | 14 | 20,52 |
| 63503 | WDR | FKM | A | 90 | 130 | 13 | 20,52 |
| 37613 | WDR | FKM | A | 92 | 120 | 13 | 17,83 |
| 83185 | WDR | FKM | A | 95 | 110 | 10 | 15,97 |
| 63473 | WDR | FKM | A | 95 | 110 | 12 | 15,97 |
| 62552 | WDR | FKM | A | 95 | 115 | 13 | 17,83 |
| 22542 | WDR | FKM | AS | 95 | 115 | 13 | 19,62 |
| 20436 | WDR | FKM | A | 95 | 120 | 12 | 17,83 |
| 36450 | WDR | FKM | AS | 95 | 120 | 12 | 19,62 |
| 38119 | WDR | FKM | AS | 95 | 120 | 13 | 19,62 |
| 20751 | WDR | FKM | A | 95 | 125 | 12 | 20,52 |
| 22543 | WDR | FKM | AS | 95 | 125 | 12 | 22,57 |
| 63504 | WDR | FKM | A | 95 | 130 | 13 | 26,41 |
| 56842 | WDR | FKM | AS | 100 | 115 | 9 | 19,62 |
| 189120 | WDR | FKM | ASY | 100 | 120 | 7,5 | 28,02 |
| 63490 | WDR | FKM | AS | 100 | 120 | 10 | 19,62 |
| 20438 | WDR | FKM | A | 100 | 120 | 12 | 17,83 |
| 73238 | WDR | FKM | AS | 100 | 120 | 12 | 19,62 |
| 22602 | WDR | FKM | A | 100 | 120 | 13 | 18,22 |
| 56843 | WDR | FKM | AD | 100 | 120 | 13 | 27,52 |
| 20439 | WDR | FKM | A | 100 | 125 | 12 | 20,52 |
| 57136 | WDR | FKM | AS | 100 | 125 | 12 | 21,55 |
| 22603 | WDR | FKM | A | 100 | 125 | 13 | 20,52 |
| 20440 | WDR | FKM | A | 100 | 130 | 12 | 20,52 |
| 21344 | WDR | FKM | AS | 100 | 130 | 12 | 22,57 |
| 63517 | WDR | FKM | A | 100 | 140 | 13 | 22,40 |
| 63527 | WDR | FKM | A | 100 | 150 | 13 | 25,25 |
| 24731 | WDR | FKM | A | 104 | 125 | 10 | 20,52 |
| 20752 | WDR | FKM | A | 105 | 125 | 13 | 20,52 |
| 56847 | WDR | FKM | AS | 105 | 125 | 13 | 22,57 |
| 62554 | WDR | FKM | AS | 105 | 130 | 12 | 22,57 |
| 20441 | WDR | FKM | A | 105 | 130 | 12 | 20,52 |
| 37962 | WDR | FKM | AS | 105 | 130 | 13 | 22,57 |
| 63510 | WDR | FKM | A | 105 | 135 | 13 | 22,40 |
| 20442 | WDR | FKM | A | 105 | 140 | 12 | 22,40 |
| 20443 | WDR | FKM | A | 110 | 130 | 12 | 20,52 |
| 56849 | WDR | FKM | AS | 110 | 130 | 12 | 22,57 |
| 22605 | WDR | FKM | A | 110 | 130 | 13 | 20,52 |

| CODICE | TIPO | MAT. | SPEC. | d1 mm | d2 mm | b mm | LISTINO 5-2016 X 1 pz € |
|---|---|---|---|---|---|---|---|
| 63511 | WDR | FKM | A | 110 | 135 | 12 | 26,16 |
| 20445 | WDR | FKM | A | 110 | 140 | 12 | 22,40 |
| 42642 | WDR | FKM | AS | 110 | 140 | 12 | 24,63 |
| 22606 | WDR | FKM | A | 110 | 140 | 13 | 22,40 |
| 26445 | WDR | FKM | A | 110 | 150 | 13 | 25,25 |
| 48667 | WDR | FKM | A | 110 | 200 | 13 | 48,56 |
| 63519 | WDR | FKM | A | 112 | 140 | 13 | 22,40 |
| 63507 | WDR | FKM | A | 115 | 130 | 12 | 24,52 |
| 83187 | WDR | FKM | A | 115 | 135 | 9 | 28,03 |
| 56851 | WDR | FKM | A | 115 | 140 | 10 | 22,40 |
| 20446 | WDR | FKM | A | 115 | 140 | 12 | 22,40 |
| 22544 | WDR | FKM | AS | 115 | 140 | 12 | 24,63 |
| 63524 | WDR | FKM | A | 115 | 145 | 13 | 25,25 |
| 36451 | WDR | FKM | A | 115 | 150 | 12 | 27,96 |
| 36452 | WDR | FKM | AS | 115 | 150 | 12 | 27,77 |
| 35046 | WDR | FKM | A | 120 | 140 | 10 | 22,40 |
| 116428 | WDR | FKM | A | 120 | 140 | 12 | 22,40 |
| 62555 | WDR | FKM | AS | 120 | 140 | 12 | 23,51 |
| 20447 | WDR | FKM | A | 120 | 140 | 13 | 22,40 |
| 56853 | WDR | FKM | AS | 120 | 140 | 13 | 24,63 |
| 22545 | WDR | FKM | AS | 120 | 150 | 12 | 27,77 |
| 20448 | WDR | FKM | A | 120 | 150 | 12 | 25,25 |
| 20754 | WDR | FKM | A | 120 | 150 | 13 | 25,25 |
| 57149 | WDR | FKM | AS | 120 | 150 | 13 | 27,77 |
| 62556 | WDR | FKM | A | 120 | 150 | 15 | 25,25 |
| 56854 | WDR | FKM | AS | 120 | 150 | 15 | 27,77 |
| 83733 | WDR | FKM | A | 120 | 150 | 16 | 25,25 |
| 56855 | WDR | FKM | A | 120 | 160 | 12 | 28,84 |
| 20450 | WDR | FKM | A | 120 | 160 | 15 | 30,04 |
| 22546 | WDR | FKM | AS | 125 | 150 | 12 | 27,77 |
| 20451 | WDR | FKM | A | 125 | 150 | 12 | 25,25 |
| 63529 | WDR | FKM | A | 125 | 150 | 13 | 25,25 |
| 56857 | WDR | FKM | A | 125 | 155 | 12 | 28,84 |
| 20479 | WDR | FKM | A | 125 | 160 | 12 | 28,84 |
| 63535 | WDR | FKM | A | 125 | 160 | 15 | 28,84 |
| 22607 | WDR | FKM | A | 128 | 150 | 13 | 25,25 |
| 56861 | WDR | FKM | A | 130 | 150 | 10 | 25,25 |
| 56862 | WDR | FKM | AS | 130 | 150 | 12 | 27,77 |
| 126322 | WDR | FKM | A | 130 | 150 | 13 | 25,25 |
| 48672 | WDR | FKM | AS | 130 | 150 | 15 | 27,77 |
| 34870 | WDR | FKM | A | 130 | 160 | 12 | 28,84 |
| 73239 | WDR | FKM | AS | 130 | 160 | 12 | 31,72 |
| 20478 | WDR | FKM | A | 130 | 160 | 13 | 28,84 |
| 20452 | WDR | FKM | A | 130 | 160 | 15 | 28,84 |
| 22547 | WDR | FKM | AS | 130 | 160 | 15 | 31,72 |
| 63539 | WDR | FKM | A | 130 | 165 | 13 | 33,54 |
| 35701 | WDR | FKM | A | 130 | 170 | 12 | 33,54 |
| 22608 | WDR | FKM | A | 130 | 170 | 13 | 33,54 |
| 22609 | WDR | FKM | A | 135 | 160 | 12 | 28,84 |

| CODICE | TIPO | MAT. | SPEC. | d1 mm | d2 mm | b mm | LISTINO 5-2016 X 1 pz € |
|---|---|---|---|---|---|---|---|
| 63536 | WDR | FKM | A | 135 | 160 | 13 | 28,84 |
| 83198 | WDR | FKM | AS | 135 | 160 | 15 | 29,44 |
| 63540 | WDR | FKM | A | 135 | 165 | 12 | 33,54 |
| 37462 | WDR | FKM | A | 135 | 170 | 12 | 33,54 |
| 179435 | WDR | FKM | AS | 135 | 170 | 12 | 35,21 |
| 36455 | WDR | FKM | A | 135 | 170 | 15 | 33,54 |
| 149918 | WDR | FKM | A | 140 | 160 | 13 | 28,84 |
| 79560 | WDR | FKM | A | 140 | 165 | 12 | 33,54 |
| 38656 | WDR | FKM | A | 140 | 170 | 12 | 33,54 |
| 22548 | WDR | FKM | AS | 140 | 170 | 12 | 36,89 |
| 63544 | WDR | FKM | A | 140 | 170 | 13 | 33,54 |
| 20453 | WDR | FKM | A | 140 | 170 | 15 | 33,54 |
| 56864 | WDR | FKM | AS | 140 | 170 | 15 | 36,89 |
| 56865 | WDR | FKM | A | 140 | 180 | 12 | 37,87 |
| 25848 | WDR | FKM | A | 140 | 180 | 13 | 37,87 |
| 20480 | WDR | FKM | A | 140 | 180 | 15 | 37,87 |
| 63541 | WDR | FKM | A | 145 | 165 | 13 | 33,54 |
| 63545 | WDR | FKM | A | 145 | 170 | 15 | 33,54 |
| 48679 | WDR | FKM | AS | 145 | 170 | 15 | 36,89 |
| 20477 | WDR | FKM | A | 145 | 175 | 15 | 37,87 |
| 83199 | WDR | FKM | AS | 145 | 175 | 15 | 41,66 |
| 20485 | WDR | FKM | A | 145 | 180 | 13 | 37,87 |
| 22610 | WDR | FKM | A | 145 | 180 | 14 | 37,87 |
| 56866 | WDR | FKM | A | 148 | 170 | 14,5 | 33,54 |
| 20475 | WDR | FKM | A | 150 | 170 | 12 | 33,54 |
| 63546 | WDR | FKM | A | 150 | 170 | 15 | 33,54 |
| 56867 | WDR | FKM | A | 150 | 180 | 12 | 37,87 |
| 20469 | WDR | FKM | A | 150 | 180 | 13 | 37,87 |
| 57137 | WDR | FKM | AS | 150 | 180 | 13 | 39,78 |
| 63550 | WDR | FKM | AS | 150 | 180 | 14 | 41,66 |
| 20454 | WDR | FKM | A | 150 | 180 | 15 | 37,87 |
| 69508 | WDR | FKM | AS | 150 | 180 | 15 | 41,66 |
| 37105 | WDR | FKM | A | 155 | 180 | 13 | 37,87 |
| 63551 | WDR | FKM | A | 155 | 180 | 15 | 37,87 |
| 63552 | WDR | FKM | A | 158 | 180 | 15 | 37,87 |
| 63552 | WDR | FKM | A | 158 | 180 | 15 | 37,87 |
| 48695 | WDR | FKM | AS | 160 | 180 | 10 | 41,66 |
| 56868 | WDR | FKM | A | 160 | 185 | 10 | 43,78 |
| 126323 | WDR | FKM | A | 160 | 190 | 12 | 43,78 |
| 63556 | WDR | FKM | A | 160 | 190 | 13 | 43,78 |
| 25697 | WDR | FKM | AS | 160 | 190 | 15 | 48,16 |
| 20455 | WDR | FKM | A | 160 | 190 | 15 | 43,78 |
| 63557 | WDR | FKM | A | 160 | 200 | 12 | 48,52 |
| 63558 | WDR | FKM | A | 160 | 200 | 15 | 48,52 |
| 20501 | WDR | FKM | A | 162 | 190 | 12 | 43,78 |
| 22611 | WDR | FKM | A | 165 | 190 | 13 | 43,78 |
| 20486 | WDR | FKM | A | 170 | 190 | 15 | 43,78 |
| 20456 | WDR | FKM | A | 170 | 200 | 12 | 48,52 |
| 49444 | WDR | FKM | A | 170 | 200 | 13 | 48,52 |

| CODICE | TIPO | MAT. | SPEC. | d1 mm | d2 mm | b mm | LISTINO 5-2016 X 1 pz € |
|---|---|---|---|---|---|---|---|
| 20457 | WDR | FKM | A | 170 | 200 | 15 | 46,92 |
| 27300 | WDR | FKM | AS | 170 | 200 | 15 | 51,62 |
| 83189 | WDR | FKM | A | 175 | 200 | 10 | 48,52 |
| 27474 | WDR | FKM | A | 175 | 200 | 15 | 46,92 |
| 20487 | WDR | FKM | A | 180 | 200 | 13 | 48,52 |
| 36182 | WDR | FKM | A | 180 | 200 | 15 | 48,52 |
| 36182 | WDR | FKM | A | 180 | 200 | 15 | 56,53 |
| 22613 | WDR | FKM | A | 180 | 210 | 15 | 48,52 |
| 24676 | WDR | FKM | AS | 180 | 210 | 15 | 68,10 |
| 20488 | WDR | FKM | A | 180 | 215 | 15 | 75,74 |
| 22614 | WDR | FKM | A | 180 | 215 | 16 | 91,65 |
| 24749 | WDR | FKM | A | 180 | 220 | 15 | 115,63 |
| 20489 | WDR | FKM | A | 185 | 210 | 13 | 75,74 |
| 60259 | WDR | FKM | AS | 185 | 210 | 13 | 73,72 |
| 48707 | WDR | FKM | AS | 190 | 215 | 16 | 77,95 |
| 20490 | WDR | FKM | A | 190 | 220 | 15 | 71,66 |
| 124590 | WDR | FKM | AS | 190 | 220 | 15 | 77,95 |
| 56871 | WDR | FKM | AS | 190 | 225 | 16 | 82,84 |
| 48708 | WDR | FKM | AS | 190 | 230 | 16 | 82,84 |
| 75102 | WDR | FKM | A | 195 | 220 | 16 | 88,48 |
| 20491 | WDR | FKM | A | 200 | 230 | 13 | 110,13 |
| 20492 | WDR | FKM | A | 200 | 230 | 15 | 77,05 |
| 27506 | WDR | FKM | AS | 200 | 230 | 15 | 82,84 |
| 20493 | WDR | FKM | A | 200 | 250 | 15 | 155,68 |
| 56873 | WDR | FKM | A | 205 | 230 | 16 | 55,13 |
| 22615 | WDR | FKM | A | 210 | 240 | 15 | 86,87 |
| 143883 | WDR | FKM | AS | 210 | 240 | 15 | 100,30 |
| 56874 | WDR | FKM | A | 210 | 250 | 15 | 133,45 |
| 65053 | WDR | FKM | A | 215 | 240 | 12 | 111,15 |
| 20494 | WDR | FKM | A | 220 | 250 | 15 | 95,65 |
| 48710 | WDR | FKM | AS | 220 | 250 | 15 | 88,49 |
| 72596 | WDR | FKM | A | 220 | 260 | 15 | 134,64 |
| 20495 | WDR | FKM | A | 230 | 260 | 15 | 110,18 |
| 22549 | WDR | FKM | AS | 230 | 260 | 15 | 119,55 |
| 22616 | WDR | FKM | A | 230 | 280 | 15 | 197,93 |
| 20496 | WDR | FKM | A | 240 | 270 | 15 | 115,91 |
| 48712 | WDR | FKM | AS | 240 | 270 | 15 | 126,51 |
| 56877 | WDR | FKM | A | 240 | 280 | 15 | 164,87 |
| 20497 | WDR | FKM | A | 250 | 280 | 15 | 133,60 |
| 193393 | WDR | FKM | AS | 250 | 280 | 15 | 140,28 |
| 118680 | WDR | FKM | A | 255 | 290 | 16 | 166,98 |
| 48713 | WDR | FKM | A | 260 | 290 | 15 | 196,07 |
| 117338 | WDR | FKM | A | 260 | 290 | 20 | 196,07 |
| 75104 | WDR | FKM | A | 260 | 300 | 16 | 223,51 |
| 22617 | WDR | FKM | A | 260 | 300 | 20 | 176,73 |
| 44090 | WDR | FKM | A | 265 | 290 | 16 | 228,78 |
| 129934 | WDR | FKM | A | 270 | 310 | 16 | 221,27 |
| 20498 | WDR | FKM | A | 280 | 310 | 15 | 221,27 |
| 36946 | WDR | FKM | A | 280 | 320 | 20 | 229,50 |

| CODICE | TIPO | MAT. | SPEC. | d1 mm | d2 mm | b mm | LISTINO 5-2016 X 1 pz € |
|---|---|---|---|---|---|---|---|
| 73241 | WDR | FKM | AS | 280 | 320 | 20 | 203,14 |
| 24094 | WDR | FKM | A | 300 | 340 | 18 | 246,78 |
| 124924 | WDR | FKM | A | 320 | 350 | 15 | 303,44 |
| 27394 | WDR | FKM | A | 320 | 360 | 20 | 269,68 |
| 122109 | WDR | FKM | A | 325 | 365 | 16 | 275,61 |
| 44619 | WDR | FKM | A | 340 | 380 | 18 | 297,10 |
| 134402 | WDR | FKM | A | 340 | 380 | 20 | 297,10 |
| 39735 | WDR | FKM | AS | 340 | 380 | 20 | 311,96 |
| 78377 | WDR | FKM | A | 360 | 400 | 18 | 344,27 |
| 180148 | WDR | FKM | A | 360 | 400 | 20 | 344,27 |
| 48720 | WDR | FKM | AS | 360 | 400 | 20 | 361,48 |
| 26244 | WDR | FKM | A | 380 | 420 | 20 | 349,66 |
| 56882 | WDR | FKM | A | 390 | 430 | 20 | 422,23 |
| 56884 | WDR | FKM | A | 400 | 440 | 20 | 439,96 |
| 48723 | WDR | FKM | AS | 440 | 480 | 20 | 436,66 |
| 56887 | WDR | FKM | A | 480 | 520 | 20 | 490,22 |
| 193288 | WDR | FKM | A | 480 | 530 | 25 | 571,50 |
| 193405 | WDR | FKM | AS | 480 | 530 | 25 | 600,06 |
| 48724 | WDR | FKM | AS | 480 | 520 | 20 | 514,65 |
| 163018 | WDR | FKM | A | 490 | 530 | 20 | 537,06 |
| 56655 | WDR | FKM | A | 500 | 540 | 20 | 621,88 |
| 117548 | WDR | FKM | AS | 560 | 590 | 20 | 643,53 |

## ANELLI DI TENUTA PER ALBERI ROTANTI

| | | | | | | | | | | | |
|---|---|---|---|---|---|---|---|---|---|---|---|
| DIN | A | AS | AO | | B | BS | BO | AD | BD | C | CS |
| Dichtomatik | WA | WAS | WAO | WASY | WB | WBS | WBO | WAD | WBD | WC | WCS |
| NOK | SC | TC | VC | TCN/V | SB | TB | VB | DC | DB | SA | TA |
| Asia | SC | TC | VC | TCN/V | SB | TB | VB | DC | DB | SA | TA |
| Corcos | BA | BASL | BAOF | BABSL | B1 | B1SL | B1OF | BADUO | B1DUO | B2 | B2SL |
| Dichta | A | AS | AO | ASP | B | BS | BO | AD | BD | C | CS |
| FP | G | GP | GSM | GAP | M | MP | MSM | G2 | M2 | | |
| Rolf | ST | RP | LSM | AP | RM | RM/RP | RM/LSM | RD | RM/RD | RC | |
| Taurus | TG | TGP | TM | | LG | LGP | LM | TGG | LGG | LLG | LLGP |
| Stefa | CB | CC | CD | | BA/BB | BC | BD | CK | BK | DA/DB | DC |
| Goetze | 827N | 827S | | | 822N | 822S | | 827D | 822D | 824N | 824S |
| Kaco | DG | DGS | DE | | DF | DFS | BDF | DGD | DFD | DFK | DFKS |
| Elring | A | AS | ADF | | B | BS | BDF | AD | BD | C | CS |

# Anelli di tenuta per alberi rotanti

NBR

WDR

Anelli di Tenuta

**Tipi standard commercializzati**

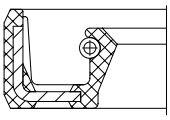

**WA** Tipo standard esterno in gomma

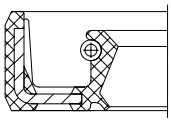

**WAS** Tipo standard con labbro parapolvere

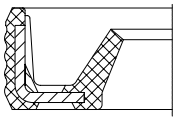

**WAO** Senza molla esterno in gomma

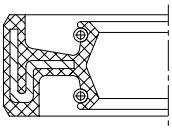

**WAD** Con doppio labbro di tenuta

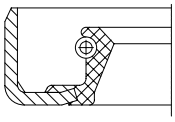

**WB** Esterno in metallo

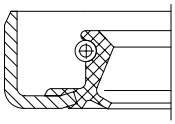

**WBS** Esterno in metallo con labbro parapolvere

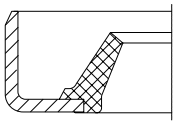

**WBO** Senza molla esterno in metallo

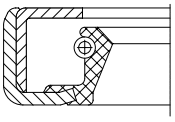

**WC** Esterno in metallo con rinforzo

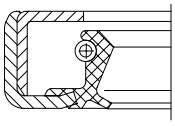

**WCS** Esterno in metallo con rinforzo con labbro parapolvere

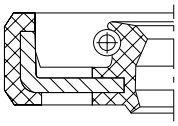

**WASY** Resistente alla pressione

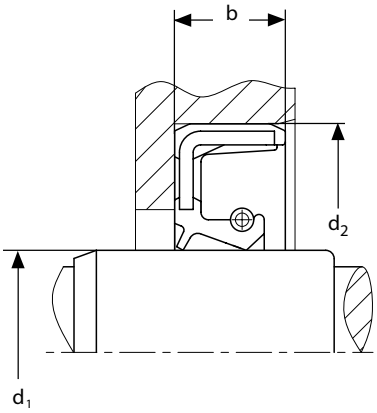

| CODICE | NUOVO CODICE | TIPO | MAT. | SPEC. | d1 mm | d2 mm | b mm | LISTINO 5-2016 X 100 € |
|---|---|---|---|---|---|---|---|---|
| 22037 | | WDR | NBR | AO | 4 | 8 | 2 | 131,91 |
| 57025 | | WDR | NBR | A | 4 | 11 | 6 | 100,23 |
| 42406 | 186218 | WDR | NBR | A | 4 | 12 | 6 | 100,23 |
| 22038 | | WDR | NBR | AO | 5 | 9 | 2 | 131,91 |
| 22039 | | WDR | NBR | AO | 5 | 10 | 2 | 131,91 |
| 16758 | | WDR | NBR | A | 5 | 15 | 6 | 100,23 |
| 38432 | | WDR | NBR | A | 5 | 16 | 6 | 100,23 |
| 38809 | 186097 | WDR | NBR | A | 5 | 16 | 7 | 100,23 |
| 22040 | | WDR | NBR | AO | 6 | 10 | 2 | 131,91 |
| 81892 | | WDR | NBR | A | 6 | 13 | 4,5 | 152,69 |
| 19765 | | WDR | NBR | BO | 6 | 13 | 4,5 | 162,15 |
| 38433 | 186080 | WDR | NBR | A | 6 | 14 | 6 | 131,47 |
| 18652 | | WDR | NBR | A | 6 | 15 | 4 | 100,23 |
| 18654 | | WDR | NBR | A | 6 | 16 | 5 | 113,82 |
| 18655 | 185583 | WDR | NBR | A | 6 | 16 | 7 | 100,23 |
| 18604 | | WDR | NBR | B | 6 | 16 | 7 | 151,00 |
| 16759 | | WDR | NBR | A | 6 | 19 | 7 | 100,23 |
| 27673 | 186048 | WDR | NBR | AS | 6 | 22 | 7 | 105,44 |
| 16760 | 185159 | WDR | NBR | A | 6 | 22 | 7 | 100,23 |
| 19997 | 185047 | WDR | NBR | A | 6,35 | 19,05 | 6,35 | 174,43 |
| 92832 | | WDR | NBR | BO | 7 | 11 | 2 | 162,15 |
| 16761 | | WDR | NBR | A | 7 | 16 | 7 | 100,23 |
| 40102 | | WDR | NBR | B | 7 | 16 | 7 | 151,00 |
| 16762 | | WDR | NBR | A | 7 | 22 | 7 | 100,23 |
| 59667 | | WDR | NBR | A | 7,93 | 15,87 | 3,96 | 174,43 |
| 37883 | | WDR | NBR | A | 7,93 | 17,46 | 7,93 | 174,43 |
| 19875 | | WDR | NBR | A | 7,93 | 19,05 | 6,35 | 174,43 |
| 20795 | | WDR | NBR | A | 7,93 | 22,22 | 6,35 | 174,43 |
| 118788 | | WDR | NBR | AS | 7,93 | 22,22 | 6,35 | 182,24 |
| 22044 | | WDR | NBR | AO | 8 | 12 | 3 | 139,09 |
| 73883 | | WDR | NBR | BO | 8 | 12 | 3 | 162,15 |
| 59462 | | WDR | NBR | AO | 8 | 13 | 3,5 | 131,91 |
| 38811 | 185086 | WDR | NBR | A | 8 | 14 | 4 | 100,23 |
| 83938 | | WDR | NBR | AO | 8 | 14 | 4 | 131,91 |
| 22045 | | WDR | NBR | AO | 8 | 15 | 3 | 131,91 |
| 48922 | | WDR | NBR | BO | 8 | 15 | 3 | 162,15 |
| 38812 | | WDR | NBR | A | 8 | 15 | 5 | 111,82 |
| 123340 | | WDR | NBR | AO | 8 | 16 | 3 | 131,91 |
| 66795 | 185113 | WDR | NBR | AS | 8 | 16 | 7 | 105,44 |
| 16764 | 185160 | WDR | NBR | A | 8 | 16 | 7 | 100,23 |
| 18491 | | WDR | NBR | B | 8 | 16 | 7 | 151,00 |
| 16765 | | WDR | NBR | A | 8 | 18 | 5 | 100,23 |
| 185861 | | WDR | NBR | AS | 8 | 20 | 6 | 137,58 |
| 130629 | | WDR | NBR | A | 8 | 20 | 7 | 100,23 |
| 16767 | | WDR | NBR | A | 8 | 22 | 7 | 100,23 |
| 18594 | 185566 | WDR | NBR | AS | 8 | 22 | 7 | 105,44 |
| 16768 | | WDR | NBR | A | 8 | 24 | 7 | 100,23 |
| 22047 | | WDR | NBR | AO | 9 | 16 | 3 | 131,91 |
| 57039 | | WDR | NBR | B | 9 | 17 | 4,5 | 151,00 |

| CODICE | NUOVO CODICE | TIPO | MAT. | SPEC. | d1 mm | d2 mm | b mm | LISTINO 5-2016 X 100 € |
|---|---|---|---|---|---|---|---|---|
| 57028 | 186248 | WDR | NBR | AS | 9 | 20 | 7 | 105,44 |
| 18683 | 185587 | WDR | NBR | A | 9 | 22 | 7 | 100,23 |
| 38845 | 186104 | WDR | NBR | AS | 9 | 22 | 7 | 105,44 |
| 34811 | | WDR | NBR | B | 9 | 22 | 7 | 151,00 |
| 16772 | | WDR | NBR | A | 9 | 24 | 7 | 100,23 |
| 18597 | 185569 | WDR | NBR | A | 9 | 26 | 7 | 100,23 |
| 60312 | | WDR | NBR | A | 9 | 30 | 7 | 100,23 |
| 19876 | | WDR | NBR | A | 9,52 | 19,05 | 6,35 | 174,43 |
| 19998 | | WDR | NBR | A | 9,52 | 22,22 | 6,35 | 174,43 |
| 59468 | 186254 | WDR | NBR | AS | 9,52 | 22,22 | 6,35 | 182,24 |
| 60026 | | WDR | NBR | B | 9,52 | 22,22 | 6,35 | 174,43 |
| 22048 | | WDR | NBR | AO | 10 | 14 | 3 | 131,91 |
| 19570 | | WDR | NBR | BO | 10 | 14 | 3 | 169,77 |
| 19768 | | WDR | NBR | BO | 10 | 15 | 3 | 162,15 |
| 16773 | 185163 | WDR | NBR | A | 10 | 16 | 4 | 100,24 |
| 19770 | | WDR | NBR | BO | 10 | 16 | 4 | 162,15 |
| 18598 | | WDR | NBR | A | 10 | 16 | 5 | 125,68 |
| 77691 | | WDR | NBR | B | 10 | 16 | 6 | 151,00 |
| 22049 | | WDR | NBR | AO | 10 | 17 | 3 | 131,91 |
| 48923 | | WDR | NBR | BO | 10 | 17 | 3 | 162,15 |
| 46405 | | WDR | NBR | AO | 10 | 17 | 4 | 131,91 |
| 18599 | 185570 | WDR | NBR | B | 10 | 17 | 5 | 151,00 |
| 18600 | 185571 | WDR | NBR | A | 10 | 18 | 4 | 100,23 |
| 131002 | | WDR | NBR | AS | 10 | 18 | 4 | 105,44 |
| 16774 | 185164 | WDR | NBR | A | 10 | 18 | 6 | 100,23 |
| 39253 | | WDR | NBR | AS | 10 | 18 | 6 | 169,31 |
| 39280 | | WDR | NBR | A | 10 | 19 | 4 | 120,12 |
| 16776 | 185165 | WDR | NBR | A | 10 | 19 | 7 | 100,23 |
| 38847 | | WDR | NBR | AS | 10 | 19 | 7 | 105,44 |
| 16775 | | WDR | NBR | B | 10 | 19 | 7 | 151,00 |
| 28395 | 185069 | WDR | NBR | A | 10 | 20 | 4 | 100,23 |
| 18606 | | WDR | NBR | AS | 10 | 20 | 5 | 108,30 |
| 77303 | | WDR | NBR | AO | 10 | 21 | 4 | 131,91 |
| 38849 | 186105 | WDR | NBR | AS | 10 | 22 | 6 | 108,30 |
| 118682 | | WDR | NBR | ASY | 10 | 22 | 6 | 226,50 |
| 37145 | | WDR | NBR | AS | 10 | 22 | 7 | 105,44 |
| 193175 | | WDR | NBR | A | 10 | 22 | 7 | 100,23 |
| 44272 | | WDR | NBR | B | 10 | 22 | 8 | 151,00 |
| 39188 | 186147 | WDR | NBR | AS | 10 | 24 | 7 | 105,44 |
| 16781 | 185167 | WDR | NBR | A | 10 | 24 | 7 | 100,23 |
| 18610 | | WDR | NBR | AS | 10 | 25 | 7 | 143,12 |
| 130630 | | WDR | NBR | A | 10 | 26 | 5,5 | 100,23 |
| 16782 | 185168 | WDR | NBR | A | 10 | 26 | 7 | 100,23 |
| 38850 | 186106 | WDR | NBR | AS | 10 | 26 | 7 | 105,44 |
| 16783 | 185169 | WDR | NBR | A | 10 | 28 | 7 | 110,02 |
| 16784 | 185170 | WDR | NBR | A | 10 | 30 | 7 | 100,23 |
| 74867 | | WDR | NBR | B | 10 | 30 | 7 | 164,01 |
| 46293 | | WDR | NBR | B | 10 | 30 | 8 | 164,01 |
| 18612 | 185573 | WDR | NBR | A | 11 | 17 | 4 | 100,23 |

| CODICE | NUOVO CODICE | TIPO | MAT. | SPEC. | d1 mm | d2 mm | b mm | LISTINO 5-2016 X 100 € |
|---|---|---|---|---|---|---|---|---|
| 73085 | 186307 | WDR | NBR | B | 11 | 17 | 4 | 151,00 |
| 130833 | | WDR | NBR | A | 11 | 18 | 4 | 100,23 |
| 18614 | 184993 | WDR | NBR | AS | 11 | 22 | 7 | 105,44 |
| 16785 | | WDR | NBR | A | 11 | 22 | 7 | 100,23 |
| 18684 | 185588 | WDR | NBR | A | 11 | 26 | 7 | 100,23 |
| 26251 | | WDR | NBR | A | 11 | 30 | 7 | 131,47 |
| 35313 | | WDR | NBR | AS | 11,11 | 22,22 | 6,35 | 182,24 |
| 19991 | | WDR | NBR | A | 11,11 | 25,4 | 6,35 | 174,43 |
| 20000 | | WDR | NBR | A | 11,11 | 28,57 | 9,52 | 174,43 |
| 22050 | | WDR | NBR | AO | 12 | 16 | 3 | 131,91 |
| 77946 | | WDR | NBR | BO | 12 | 16 | 3 | 162,15 |
| 22051 | | WDR | NBR | AO | 12 | 18 | 3 | 131,91 |
| 22052 | | WDR | NBR | AO | 12 | 19 | 3 | 131,91 |
| 48925 | | WDR | NBR | BO | 12 | 19 | 3 | 162,15 |
| 57034 | 186250 | WDR | NBR | AS | 12 | 19 | 5 | 104,97 |
| 16787 | 184909 | WDR | NBR | A | 12 | 19 | 5 | 100,23 |
| 38852 | 186107 | WDR | NBR | AS | 12 | 20 | 4 | 105,44 |
| 16788 | | WDR | NBR | A | 12 | 20 | 5 | 100,23 |
| 18572 | 185557 | WDR | NBR | B | 12 | 20 | 5 | 151,00 |
| 18575 | 185558 | WDR | NBR | A | 12 | 22 | 4 | 100,23 |
| 18577 | | WDR | NBR | A | 12 | 22 | 5 | 100,23 |
| 57036 | 186252 | WDR | NBR | AS | 12 | 22 | 5 | 105,44 |
| 16790 | 185171 | WDR | NBR | AS | 12 | 22 | 6 | 105,44 |
| 77834 | | WDR | NBR | ASY | 12 | 22 | 6 | 226,50 |
| 18579 | | WDR | NBR | AS | 12 | 22 | 7 | 105,44 |
| 16791 | | WDR | NBR | A | 12 | 22 | 7 | 100,23 |
| 16792 | | WDR | NBR | B | 12 | 22 | 7 | 151,00 |
| 57037 | | WDR | NBR | A | 12 | 24 | 4,5 | 100,23 |
| 18582 | 185561 | WDR | NBR | AS | 12 | 24 | 6 | 105,44 |
| 16796 | 185174 | WDR | NBR | A | 12 | 24 | 7 | 100,23 |
| 16797 | 184910 | WDR | NBR | AS | 12 | 24 | 7 | 105,44 |
| 18587 | | WDR | NBR | A | 12 | 25 | 5 | 100,23 |
| 56177 | 186242 | WDR | NBR | AS | 12 | 25 | 5 | 105,44 |
| 18589 | | WDR | NBR | AS | 12 | 25 | 7 | 111,45 |
| 16799 | | WDR | NBR | A | 12 | 25 | 8 | 125,01 |
| 130631 | | WDR | NBR | A | 12 | 26 | 5,5 | 100,23 |
| 38854 | 186108 | WDR | NBR | AS | 12 | 26 | 7 | 105,44 |
| 16801 | 185175 | WDR | NBR | A | 12 | 26 | 8 | 100,23 |
| 38819 | 186099 | WDR | NBR | A | 12 | 28 | 5 | 100,23 |
| 16802 | | WDR | NBR | A | 12 | 28 | 7 | 100,23 |
| 38856 | 186109 | WDR | NBR | AS | 12 | 28 | 7 | 105,44 |
| 16803 | 184911 | WDR | NBR | B | 12 | 28 | 7 | 151,00 |
| 18548 | 185547 | WDR | NBR | AS | 12 | 30 | 7 | 105,44 |
| 18547 | 185546 | WDR | NBR | A | 12 | 30 | 7 | 100,23 |
| 16812 | 184912 | WDR | NBR | A | 12 | 30 | 10 | 144,36 |
| 38301 | | WDR | NBR | A | 12 | 32 | 5 | 147,24 |
| 16806 | 185176 | WDR | NBR | A | 12 | 32 | 7 | 111,95 |
| 18551 | 185548 | WDR | NBR | AS | 12 | 32 | 7 | 117,15 |
| 18666 | | WDR | NBR | B | 12 | 32 | 7 | 167,92 |

| CODICE | NUOVO CODICE | TIPO | MAT. | SPEC. | d1 mm | d2 mm | b mm | LISTINO 5-2016 X 100 € |
|---|---|---|---|---|---|---|---|---|
| 64559 | | WDR | NBR | A | 12 | 35 | 4,3 | 197,88 |
| 43605 | | WDR | NBR | A | 12 | 35 | 7 | 131,47 |
| 60826 | | WDR | NBR | BO | 12,7 | 22,22 | 3,17 | 162,15 |
| 19877 | | WDR | NBR | A | 12,7 | 22,22 | 6,35 | 174,43 |
| 20001 | | WDR | NBR | A | 12,7 | 25,4 | 6,35 | 174,43 |
| 59738 | 186258 | WDR | NBR | AS | 12,7 | 25,4 | 6,35 | 182,24 |
| 20796 | | WDR | NBR | AS | 12,7 | 25,4 | 7,93 | 182,24 |
| 19879 | | WDR | NBR | A | 12,7 | 25,4 | 9,52 | 174,43 |
| 19881 | 185880 | WDR | NBR | A | 12,7 | 28,57 | 6,35 | 174,43 |
| 59739 | | WDR | NBR | AS | 12,7 | 28,57 | 6,35 | 182,24 |
| 19882 | | WDR | NBR | A | 12,7 | 28,57 | 7,93 | 174,43 |
| 20002 | | WDR | NBR | A | 12,7 | 28,57 | 9,52 | 174,43 |
| 22053 | | WDR | NBR | AO | 13 | 19 | 3 | 131,91 |
| 41214 | | WDR | NBR | BO | 13 | 19 | 3 | 162,15 |
| 16807 | | WDR | NBR | A | 13 | 22 | 5 | 120,95 |
| 18555 | | WDR | NBR | B | 13 | 22 | 5 | 151,00 |
| 36812 | | WDR | NBR | BS | 13 | 22 | 5 | 158,81 |
| 18556 | 185550 | WDR | NBR | A | 13 | 22 | 6 | 100,23 |
| 18558 | 184990 | WDR | NBR | A | 13 | 26 | 5 | 100,23 |
| 44273 | | WDR | NBR | B | 13 | 26 | 9 | 151,00 |
| 175568 | 186344 | WDR | NBR | AS | 13 | 28 | 7 | 105,44 |
| 18560 | 185552 | WDR | NBR | A | 13 | 30 | 7 | 100,23 |
| 36642 | | WDR | NBR | AO | 14 | 18 | 3 | 139,35 |
| 22054 | | WDR | NBR | AO | 14 | 20 | 3 | 131,91 |
| 89767 | | WDR | NBR | A | 14 | 20 | 5 | 129,67 |
| 18563 | | WDR | NBR | B | 14 | 20 | 5 | 164,01 |
| 22055 | | WDR | NBR | AO | 14 | 21 | 3 | 131,91 |
| 22056 | | WDR | NBR | AO | 14 | 22 | 3 | 131,91 |
| 16813 | | WDR | NBR | A | 14 | 22 | 4 | 100,23 |
| 38858 | | WDR | NBR | AS | 14 | 22 | 4 | 105,44 |
| 19573 | | WDR | NBR | AO | 14 | 22 | 4 | 131,91 |
| 185555 | | WDR | NBR | A | 14 | 22 | 5 | 100,42 |
| 83461 | 186330 | WDR | NBR | AS | 14 | 22 | 5 | 105,44 |
| 18565 | | WDR | NBR | B | 14 | 22 | 5 | 151,00 |
| 18566 | | WDR | NBR | A | 14 | 22 | 7 | 100,41 |
| 61095 | | WDR | NBR | AS | 14 | 22 | 7 | 105,44 |
| 18527 | 185539 | WDR | NBR | A | 14 | 24 | 5 | 100,23 |
| 43679 | 186222 | WDR | NBR | AS | 14 | 24 | 5 | 105,44 |
| 44992 | | WDR | NBR | B | 14 | 24 | 6 | 151,00 |
| 16814 | 185180 | WDR | NBR | A | 14 | 24 | 7 | 100,23 |
| 38466 | | WDR | NBR | AS | 14 | 24 | 7 | 105,44 |
| 18525 | | WDR | NBR | B | 14 | 24 | 7 | 151,00 |
| 74435 | | WDR | NBR | BS | 14 | 24 | 7 | 158,81 |
| 35044 | 186061 | WDR | NBR | A | 14 | 25 | 5 | 100,23 |
| 186068 | | WDR | NBR | AS | 14 | 25 | 7 | 129,60 |
| 18529 | 185540 | WDR | NBR | A | 14 | 26 | 7 | 100,23 |
| 18531 | 184989 | WDR | NBR | AS | 14 | 28 | 7 | 105,44 |
| 16816 | 185182 | WDR | NBR | A | 14 | 28 | 7 | 100,23 |
| 18532 | | WDR | NBR | B | 14 | 28 | 7 | 164,01 |

| CODICE | NUOVO CODICE | TIPO | MAT. | SPEC. | d1 mm | d2 mm | b mm | LISTINO 5-2016 X 100 € |
|---|---|---|---|---|---|---|---|---|
| 16817 | 185183 | WDR | NBR | A | 14 | 30 | 7 | 100,23 |
| 44274 | | WDR | NBR | B | 14 | 30 | 8 | 151,00 |
| 18535 | | WDR | NBR | B | 14 | 30 | 10 | 138,53 |
| 38862 | 186111 | WDR | NBR | AS | 14 | 32 | 7 | 131,47 |
| 18667 | | WDR | NBR | B | 14 | 32 | 7 | 167,92 |
| 38634 | | WDR | NBR | AS | 14 | 35 | 7 | 131,47 |
| 16820 | | WDR | NBR | A | 14 | 35 | 7 | 111,95 |
| 16822 | 185184 | WDR | NBR | B | 14 | 35 | 10 | 167,92 |
| 78375 | | WDR | NBR | BO | 14,28 | 20,64 | 4 | 162,15 |
| 59740 | | WDR | NBR | AS | 14,28 | 25,4 | 6,35 | 182,24 |
| 20005 | 185048 | WDR | NBR | A | 14,28 | 28,57 | 6,35 | 174,43 |
| 59741 | | WDR | NBR | AS | 14,28 | 28,57 | 6,35 | 182,24 |
| 19883 | | WDR | NBR | A | 14,28 | 28,57 | 9,52 | 174,43 |
| 48928 | | WDR | NBR | BO | 15 | 21 | 2 | 162,15 |
| 22057 | | WDR | NBR | AO | 15 | 21 | 3 | 131,90 |
| 48926 | | WDR | NBR | BO | 15 | 21 | 3 | 162,15 |
| 16823 | | WDR | NBR | A | 15 | 21 | 4 | 100,23 |
| 44142 | | WDR | NBR | AO | 15 | 21 | 4 | 131,91 |
| 16824 | 185185 | WDR | NBR | A | 15 | 22 | 7 | 100,23 |
| 22058 | | WDR | NBR | AO | 15 | 23 | 3 | 131,91 |
| 41218 | | WDR | NBR | BO | 15 | 23 | 3 | 162,15 |
| 117756 | | WDR | NBR | AS | 15 | 24 | 5 | 105,44 |
| 16825 | 185186 | WDR | NBR | A | 15 | 24 | 5 | 100,23 |
| 175576 | | WDR | NBR | AS | 15 | 24 | 7 | 105,44 |
| 16826 | 185187 | WDR | NBR | A | 15 | 24 | 7 | 100,23 |
| 107742 | | WDR | NBR | ASY | 15 | 24 | 7 | 226,50 |
| 77606 | | WDR | NBR | AO | 15 | 25 | 3 | 131,91 |
| 18688 | | WDR | NBR | A | 15 | 25 | 5 | 100,23 |
| 195881 | | WDR | NBR | AS | 15 | 25 | 5 | 105,25 |
| 16828 | | WDR | NBR | B | 15 | 25 | 5 | 164,01 |
| 185542 | | WDR | NBR | A | 15 | 25 | 6 | 164,86 |
| 185543 | | WDR | NBR | AS | 15 | 25 | 6 | 173,10 |
| 118683 | | WDR | NBR | ASY | 15 | 25 | 6 | 226,50 |
| 18542 | 185544 | WDR | NBR | AS | 15 | 25 | 7 | 105,44 |
| 69749 | | WDR | NBR | A | 15 | 25 | 7 | 100,23 |
| 41352 | | WDR | NBR | B | 15 | 25 | 7 | 151,00 |
| 16829 | | WDR | NBR | B | 15 | 26 | 4,5 | 100,23 |
| 117978 | | WDR | NBR | BO | 15 | 26 | 4,5 | 174,25 |
| 16830 | | WDR | NBR | A | 15 | 26 | 7 | 100,23 |
| 175577 | | WDR | NBR | AS | 15 | 26 | 6 | 105,44 |
| 16831 | 184913 | WDR | NBR | AS | 15 | 26 | 7 | 105,44 |
| 18500 | | WDR | NBR | B | 15 | 26 | 7 | 151,00 |
| 18502 | 185527 | WDR | NBR | AS | 15 | 27 | 7 | 105,44 |
| 18501 | 184988 | WDR | NBR | A | 15 | 27 | 7 | 100,23 |
| 37433 | | WDR | NBR | A | 15 | 28 | 4 | 100,23 |
| 130821 | | WDR | NBR | A | 15 | 28 | 6 | 100,23 |
| 16832 | 185189 | WDR | NBR | A | 15 | 28 | 7 | 100,23 |
| 38871 | | WDR | NBR | AS | 15 | 28 | 7 | 127,34 |
| 18668 | | WDR | NBR | B | 15 | 28 | 7 | 151,00 |

| CODICE | NUOVO CODICE | TIPO | MAT. | SPEC. | d1 mm | d2 mm | b mm | LISTINO 5-2016 X 100 € |
|---|---|---|---|---|---|---|---|---|
| 38434 | | WDR | NBR | A | 15 | 30 | 4,5 | 100,23 |
| 18505 | 185530 | WDR | NBR | AS | 15 | 30 | 5 | 105,44 |
| 16833 | 184914 | WDR | NBR | A | 15 | 30 | 7 | 100,23 |
| 16834 | | WDR | NBR | AS | 15 | 30 | 7 | 105,44 |
| 16835 | | WDR | NBR | B | 15 | 30 | 7 | 151,00 |
| 16836 | | WDR | NBR | BS | 15 | 30 | 7 | 158,81 |
| 185190 | | WDR | NBR | A | 15 | 30 | 8 | 150,17 |
| 197111 | | WDR | NBR | AS | 15 | 30 | 8 | 157,68 |
| 38873 | 186113 | WDR | NBR | AS | 15 | 30 | 10 | 105,44 |
| 16839 | | WDR | NBR | B | 15 | 30 | 10 | 151,00 |
| 38739 | | WDR | NBR | C | 15 | 30 | 10 | 305,90 |
| 185528 | | WDR | NBR | A | 15 | 32 | 5,5 | 124,38 |
| 16841 | | WDR | NBR | AS | 15 | 32 | 7 | 117,15 |
| 16840 | 184915 | WDR | NBR | A | 15 | 32 | 7 | 111,95 |
| 18669 | | WDR | NBR | B | 15 | 32 | 7 | 167,92 |
| 16843 | | WDR | NBR | A | 15 | 35 | 5 | 131,47 |
| 56930 | | WDR | NBR | AS | 15 | 35 | 6 | 138,05 |
| 118685 | | WDR | NBR | ASY | 15 | 35 | 6 | 226,50 |
| 18512 | 185533 | WDR | NBR | AS | 15 | 35 | 7 | 117,15 |
| 18689 | 185589 | WDR | NBR | A | 15 | 35 | 7 | 111,95 |
| 18671 | | WDR | NBR | B | 15 | 35 | 7 | 167,92 |
| 18494 | | WDR | NBR | BS | 15 | 35 | 7 | 175,73 |
| 185192 | | WDR | NBR | A | 15 | 35 | 8 | 127,42 |
| 185534 | | WDR | NBR | AS | 15 | 35 | 8 | 133,78 |
| 16846 | | WDR | NBR | A | 15 | 35 | 10 | 174,04 |
| 18670 | | WDR | NBR | B | 15 | 35 | 10 | 193,95 |
| 186116 | 186116 | WDR | NBR | AS | 15 | 40 | 8 | 140,50 |
| 16847 | 184916 | WDR | NBR | A | 15 | 40 | 10 | 123,66 |
| 73049 | | WDR | NBR | B | 15 | 40 | 10 | 186,14 |
| 16848 | 185193 | WDR | NBR | A | 15 | 42 | 7 | 148,39 |
| 503636 | | WDR | NBR | AS | 15 | 42 | 7 | 155,81 |
| 18516 | 185537 | WDR | NBR | AS | 15 | 42 | 10 | 155,81 |
| 19878 | | WDR | NBR | A | 15,87 | 23,81 | 4,76 | 174,43 |
| 19880 | | WDR | NBR | A | 15,87 | 25,4 | 6,35 | 151,00 |
| 40238 | | WDR | NBR | B | 15,87 | 25,4 | 6,35 | 174,43 |
| 19884 | 185881 | WDR | NBR | A | 15,87 | 28,57 | 6,35 | 174,43 |
| 20007 | 185925 | WDR | NBR | A | 15,87 | 28,57 | 7,93 | 174,43 |
| 20008 | 185926 | WDR | NBR | A | 15,87 | 28,57 | 9,52 | 174,43 |
| 20009 | | WDR | NBR | A | 15,87 | 31,75 | 6,35 | 174,43 |
| 19887 | | WDR | NBR | A | 15,87 | 31,75 | 7,93 | 201,76 |
| 19888 | | WDR | NBR | A | 15,87 | 31,75 | 9,52 | 174,43 |
| 19891 | | WDR | NBR | A | 15,87 | 33,33 | 6,35 | 174,43 |
| 20011 | 185927 | WDR | NBR | A | 15,87 | 34,92 | 6,35 | 174,43 |
| 19892 | 185886 | WDR | NBR | A | 15,87 | 34,92 | 7,93 | 174,43 |
| 20239 | 185994 | WDR | NBR | A | 15,87 | 38,1 | 6,35 | 192,65 |
| 19900 | | WDR | NBR | A | 15,87 | 38,1 | 9,52 | 192,65 |
| 44211 | | WDR | NBR | BO | 16 | 20 | 2,5 | 162,15 |
| 41220 | | WDR | NBR | BO | 16 | 21 | 3 | 162,15 |
| 22059 | | WDR | NBR | AO | 16 | 22 | 3 | 131,90 |

| CODICE | NUOVO CODICE | TIPO | MAT. | SPEC. | d1 mm | d2 mm | b mm | LISTINO 5-2016 X 100 € |
|---|---|---|---|---|---|---|---|---|
| 41219 | | WDR | NBR | BO | 16 | 22 | 3 | 162,15 |
| 38435 | 185081 | WDR | NBR | A | 16 | 22 | 4 | 100,23 |
| 19574 | | WDR | NBR | AO | 16 | 22 | 4 | 131,91 |
| 18518 | | WDR | NBR | B | 16 | 22 | 4 | 164,01 |
| 22060 | | WDR | NBR | AO | 16 | 24 | 3 | 131,91 |
| 110711 | | WDR | NBR | BO | 16 | 24 | 3 | 162,15 |
| 19575 | | WDR | NBR | AO | 16 | 24 | 4 | 131,91 |
| 18519 | | WDR | NBR | B | 16 | 24 | 4 | 151,00 |
| 16850 | 185194 | WDR | NBR | A | 16 | 24 | 5 | 100,23 |
| 16851 | | WDR | NBR | B | 16 | 24 | 6 | 151,00 |
| 18521 | | WDR | NBR | AS | 16 | 24 | 6,5 | 150,32 |
| 185195 | | WDR | NBR | A | 16 | 24 | 7 | 106,91 |
| 20251 | 185056 | WDR | NBR | B | 16 | 24 | 7 | 151,00 |
| 22061 | | WDR | NBR | AO | 16 | 25 | 3 | 131,91 |
| 130948 | | WDR | NBR | AS | 16 | 26 | 6 | 105,44 |
| 18616 | 185574 | WDR | NBR | A | 16 | 26 | 7 | 100,23 |
| 18617 | | WDR | NBR | AS | 16 | 26 | 7 | 105,44 |
| 18619 | | WDR | NBR | AS | 16 | 26 | 8 | 195,39 |
| 16853 | | WDR | NBR | A | 16 | 28 | 7 | 100,23 |
| 175569 | | WDR | NBR | AS | 16 | 28 | 7 | 105,44 |
| 38644 | | WDR | NBR | B | 16 | 28 | 7 | 151,00 |
| 18621 | 185575 | WDR | NBR | A | 16 | 30 | 4,5 | 100,24 |
| 16856 | 185196 | WDR | NBR | A | 16 | 30 | 7 | 100,23 |
| 18622 | 185576 | WDR | NBR | AS | 16 | 30 | 7 | 105,44 |
| 16857 | 185197 | WDR | NBR | B | 16 | 30 | 7 | 151,00 |
| 44275 | | WDR | NBR | B | 16 | 30 | 8 | 164,01 |
| 38738 | | WDR | NBR | C | 16 | 30 | 10 | 305,90 |
| 38980 | 186128 | WDR | NBR | AS | 16 | 32 | 7 | 131,47 |
| 16860 | 185200 | WDR | NBR | A | 16 | 32 | 7 | 111,95 |
| 19688 | | WDR | NBR | B | 16 | 32 | 7 | 167,92 |
| 16861 | | WDR | NBR | B | 16 | 32 | 10 | 167,92 |
| 16862 | | WDR | NBR | C | 16 | 32 | 10 | 305,90 |
| 18511 | 185532 | WDR | NBR | A | 16 | 35 | 7 | 111,95 |
| 18672 | | WDR | NBR | B | 16 | 35 | 7 | 167,92 |
| 16863 | | WDR | NBR | A | 16 | 35 | 10 | 218,04 |
| 16864 | | WDR | NBR | A | 16 | 40 | 10 | 123,66 |
| 20799 | | WDR | NBR | A | 16,67 | 38,1 | 6,35 | 192,65 |
| 22062 | | WDR | NBR | AO | 17 | 23 | 3 | 131,91 |
| 19577 | | WDR | NBR | AO | 17 | 24 | 4 | 131,91 |
| 16865 | | WDR | NBR | A | 17 | 24 | 7 | 125,48 |
| 35092 | | WDR | NBR | AO | 17 | 24 | 7 | 131,91 |
| 22063 | | WDR | NBR | AO | 17 | 25 | 3 | 131,91 |
| 18624 | | WDR | NBR | A | 17 | 25 | 4 | 100,23 |
| 130949 | | WDR | NBR | AS | 17 | 27 | 5 | 105,44 |
| 16868 | 185202 | WDR | NBR | A | 17 | 28 | 5 | 100,23 |
| 16869 | 185203 | WDR | NBR | A | 17 | 28 | 6 | 100,23 |
| 185578 | 185578 | WDR | NBR | AS | 17 | 28 | 6 | 105,44 |
| 16870 | | WDR | NBR | B | 17 | 28 | 6 | 151,00 |
| 16871 | 184918 | WDR | NBR | A | 17 | 28 | 7 | 100,23 |

| CODICE | NUOVO CODICE | TIPO | MAT. | SPEC. | d1 mm | d2 mm | b mm | LISTINO 5-2016 X 100 € |
|---|---|---|---|---|---|---|---|---|
| 16872 | | WDR | NBR | AS | 17 | 28 | 7 | 105,44 |
| 18634 | 185580 | WDR | NBR | A | 17 | 30 | 5 | 100,23 |
| 83462 | 185120 | WDR | NBR | AS | 17 | 30 | 5 | 105,44 |
| 18636 | | WDR | NBR | AS | 17 | 30 | 6 | 105,44 |
| 16874 | | WDR | NBR | A | 17 | 30 | 7 | 100,23 |
| 16875 | 185205 | WDR | NBR | AS | 17 | 30 | 7 | 105,44 |
| 16876 | 185206 | WDR | NBR | B | 17 | 30 | 7 | 151,00 |
| 44276 | | WDR | NBR | B | 17 | 30 | 8 | 151,00 |
| 18706 | 184995 | WDR | NBR | A | 17 | 32 | 5 | 111,95 |
| 16879 | 185208 | WDR | NBR | A | 17 | 32 | 7 | 111,95 |
| 16880 | | WDR | NBR | AS | 17 | 32 | 7 | 141,47 |
| 83379 | | WDR | NBR | B | 17 | 32 | 7,5 | 219,99 |
| 18708 | 185597 | WDR | NBR | AS | 17 | 32 | 8 | 117,15 |
| 16882 | | WDR | NBR | A | 17 | 32 | 10 | 185,67 |
| 18709 | | WDR | NBR | B | 17 | 32 | 10 | 167,92 |
| 16883 | | WDR | NBR | C | 17 | 32 | 10 | 305,90 |
| 187743 | | WDR | NBR | A | 17 | 33 | 7 | 181,02 |
| 16884 | | WDR | NBR | B | 17 | 33 | 7 | 206,97 |
| 16885 | 185210 | WDR | NBR | B | 17 | 34 | 4 | 167,92 |
| 18712 | | WDR | NBR | A | 17 | 35 | 5 | 111,95 |
| 16887 | | WDR | NBR | AS | 17 | 35 | 7 | 117,15 |
| 16886 | 184919 | WDR | NBR | A | 17 | 35 | 7 | 111,95 |
| 18714 | 185598 | WDR | NBR | B | 17 | 35 | 7 | 167,92 |
| 16889 | 195961 | WDR | NBR | AS | 17 | 35 | 8 | 131,47 |
| 16888 | | WDR | NBR | A | 17 | 35 | 8 | 111,95 |
| 18715 | 185599 | WDR | NBR | B | 17 | 35 | 8 | 167,92 |
| 44277 | | WDR | NBR | B | 17 | 35 | 10 | 167,92 |
| 16891 | | WDR | NBR | C | 17 | 35 | 10 | 305,90 |
| 186131 | | WDR | NBR | AS | 17 | 37 | 7 | 149,04 |
| 16895 | 184921 | WDR | NBR | A | 17 | 40 | 6 | 123,66 |
| 175570 | 16897 | WDR | NBR | AS | 17 | 40 | 7 | 130,17 |
| 16896 | 185212 | WDR | NBR | A | 17 | 40 | 7 | 123,66 |
| 16898 | | WDR | NBR | B | 17 | 40 | 7 | 186,14 |
| 16900 | | WDR | NBR | A | 17 | 40 | 8,5 | 188,75 |
| 16901 | 185213 | WDR | NBR | A | 17 | 40 | 10 | 123,66 |
| 38646 | | WDR | NBR | B | 17 | 40 | 10 | 186,14 |
| 16903 | 184922 | WDR | NBR | A | 17 | 47 | 7 | 171,82 |
| 18724 | 185603 | WDR | NBR | AS | 17 | 47 | 8 | 180,94 |
| 117746 | 186336 | WDR | NBR | AS | 17,46 | 28,57 | 6,35 | 182,24 |
| 501249 | 185882 | WDR | NBR | A | 17,46 | 28,57 | 6,35 | 174,43 |
| 20013 | | WDR | NBR | A | 17,46 | 31,75 | 6,35 | 174,43 |
| 20014 | 185929 | WDR | NBR | A | 17,46 | 34,92 | 9,52 | 174,43 |
| 43705 | | WDR | NBR | A | 17,8 | 26,2 | 3,5 | 174,43 |
| 22064 | | WDR | NBR | AO | 18 | 24 | 3 | 131,91 |
| 41222 | | WDR | NBR | BO | 18 | 24 | 3 | 162,15 |
| 19578 | | WDR | NBR | AO | 18 | 24 | 4 | 131,91 |
| 83015 | | WDR | NBR | A | 18 | 24 | 5 | 100,23 |
| 75201 | | WDR | NBR | AO | 18 | 25 | 3 | 131,91 |
| 18727 | | WDR | NBR | B | 18 | 25 | 4 | 151,00 |

| CODICE | NUOVO CODICE | TIPO | MAT. | SPEC. | d1 mm | d2 mm | b mm | LISTINO 5-2016 X 100 € |
|---|---|---|---|---|---|---|---|---|
| 21865 | | WDR | NBR | B | 18 | 25 | 6 | 151,00 |
| 22065 | | WDR | NBR | AO | 18 | 26 | 4 | 142,80 |
| 185605 | | WDR | NBR | A | 18 | 28 | 6 | 119,25 |
| 16904 | 185215 | WDR | NBR | A | 18 | 28 | 7 | 100,23 |
| 18730 | 185606 | WDR | NBR | AS | 18 | 28 | 7 | 105,44 |
| 83441 | 186328 | WDR | NBR | A | 18 | 30 | 5 | 100,23 |
| 20235 | | WDR | NBR | A | 18 | 30 | 6 | 105,43 |
| 118686 | | WDR | NBR | ASY | 18 | 30 | 6 | 226,50 |
| 16905 | | WDR | NBR | A | 18 | 30 | 7 | 100,23 |
| 18734 | 185607 | WDR | NBR | AS | 18 | 30 | 7 | 105,44 |
| 18675 | | WDR | NBR | B | 18 | 30 | 7 | 151,00 |
| 16906 | | WDR | NBR | BS | 18 | 30 | 7 | 184,84 |
| 44454 | | WDR | NBR | ASY | 18 | 32 | 6 | 226,50 |
| 175571 | 186345 | WDR | NBR | AS | 18 | 32 | 6 | 117,16 |
| 18738 | | WDR | NBR | AS | 18 | 32 | 7 | 117,15 |
| 18737 | 185609 | WDR | NBR | A | 18 | 32 | 7 | 111,95 |
| 18676 | | WDR | NBR | B | 18 | 32 | 7 | 167,92 |
| 35856 | | WDR | NBR | AS | 18 | 32 | 8 | 117,15 |
| 16908 | | WDR | NBR | A | 18 | 32 | 8 | 111,95 |
| 16910 | 185216 | WDR | NBR | A | 18 | 35 | 7 | 111,95 |
| 16911 | 184923 | WDR | NBR | AS | 18 | 35 | 7 | 131,47 |
| 16912 | | WDR | NBR | A | 18 | 35 | 8 | 111,95 |
| 16913 | 185217 | WDR | NBR | AS | 18 | 35 | 8 | 117,15 |
| 16915 | | WDR | NBR | C | 18 | 35 | 10 | 305,90 |
| 39002 | | WDR | NBR | AS | 18 | 40 | 7 | 130,17 |
| 16916 | 185219 | WDR | NBR | A | 18 | 40 | 7 | 123,66 |
| 16917 | 185220 | WDR | NBR | A | 18 | 40 | 10 | 123,66 |
| 16918 | | WDR | NBR | A | 18 | 42 | 8 | 148,39 |
| 22066 | | WDR | NBR | AO | 19 | 27 | 4 | 142,80 |
| 16919 | 185221 | WDR | NBR | A | 19 | 27 | 6 | 100,23 |
| 18749 | | WDR | NBR | B | 19 | 27 | 6 | 151,00 |
| 39069 | | WDR | NBR | A | 19 | 30 | 7 | 100,24 |
| 39070 | 185090 | WDR | NBR | AS | 19 | 30 | 7 | 105,44 |
| 16921 | | WDR | NBR | A | 19 | 32 | 7 | 111,95 |
| 185614 | | WDR | NBR | AS | 19 | 32 | 8 | 138,55 |
| 56653 | 185110 | WDR | NBR | A | 19 | 35 | 7 | 131,47 |
| 39091 | | WDR | NBR | AS | 19 | 35 | 7 | 138,04 |
| 18753 | 184997 | WDR | NBR | AS | 19 | 35 | 8 | 138,04 |
| 16924 | | WDR | NBR | A | 19 | 35 | 10 | 131,47 |
| 39865 | | WDR | NBR | A | 19 | 36 | 7 | 134,07 |
| 44221 | | WDR | NBR | A | 19 | 37 | 10 | - |
| 16925 | | WDR | NBR | B | 19 | 37 | 10 | 186,14 |
| 16926 | | WDR | NBR | A | 19 | 40 | 10 | 134,07 |
| 83277 | | WDR | NBR | A | 19,05 | 25,4 | 4,76 | 174,43 |
| 21856 | 186021 | WDR | NBR | A | 19,05 | 28,57 | 4,76 | 174,43 |
| 59749 | 186259 | WDR | NBR | AS | 19,05 | 28,57 | 6,35 | 182,24 |
| 78748 | | WDR | NBR | AS | 19,05 | 28,57 | 7,93 | 182,24 |
| 20015 | | WDR | NBR | A | 19,05 | 30,16 | 6,35 | 174,43 |
| 21117 | | WDR | NBR | A | 19,05 | 31,75 | 4,76 | 201,76 |

| CODICE | NUOVO CODICE | TIPO | MAT. | SPEC. | d1 mm | d2 mm | b mm | LISTINO 5-2016 X 100 € |
|---|---|---|---|---|---|---|---|---|
| 19889 | 185884 | WDR | NBR | A | 19,05 | 31,75 | 6,35 | 174,43 |
| 35173 | | WDR | NBR | A | 19,05 | 31,75 | 6,35 | 174,43 |
| 21524 | | WDR | NBR | AS | 19,05 | 31,75 | 6,35 | 182,24 |
| 19890 | 185885 | WDR | NBR | A | 19,05 | 31,75 | 7,93 | 174,43 |
| 59758 | | WDR | NBR | AS | 19,05 | 31,75 | 7,93 | 201,76 |
| 20016 | | WDR | NBR | A | 19,05 | 31,75 | 9,52 | 174,43 |
| 20017 | 185930 | WDR | NBR | A | 19,05 | 33,33 | 6,35 | 174,43 |
| 19894 | | WDR | NBR | A | 19,05 | 34,92 | 7,93 | 201,76 |
| 20019 | 185931 | WDR | NBR | A | 19,05 | 34,92 | 9,52 | 174,43 |
| 19903 | 185892 | WDR | NBR | A | 19,05 | 38,1 | 6,35 | 192,65 |
| 20020 | | WDR | NBR | A | 19,05 | 38,1 | 7,93 | 192,65 |
| 59760 | | WDR | NBR | AS | 19,05 | 38,1 | 7,93 | 243,42 |
| 19901 | | WDR | NBR | A | 19,05 | 38,1 | 9,52 | 192,65 |
| 20021 | | WDR | NBR | A | 19,05 | 41,27 | 7,93 | 266,85 |
| 20022 | 185932 | WDR | NBR | A | 19,05 | 41,27 | 9,52 | 266,85 |
| 20804 | | WDR | NBR | A | 19,05 | 44,45 | 7,93 | 266,85 |
| 19867 | | WDR | NBR | A | 19,84 | 31,75 | 6,35 | 174,43 |
| 82490 | | WDR | NBR | AO | 20 | 24 | 2,5 | 131,91 |
| 22067 | | WDR | NBR | AO | 20 | 26 | 4 | 142,80 |
| 39095 | | WDR | NBR | AS | 20 | 26 | 5 | 132,11 |
| 26511 | | WDR | NBR | AO | 20 | 26 | 10 | 142,80 |
| 39096 | | WDR | NBR | AS | 20 | 28 | 4 | 105,44 |
| 22068 | | WDR | NBR | AO | 20 | 28 | 4 | 142,80 |
| 19775 | | WDR | NBR | BO | 20 | 28 | 4 | 174,25 |
| 39873 | | WDR | NBR | AO | 20 | 28 | 4,5 | 142,80 |
| 18757 | | WDR | NBR | A | 20 | 28 | 6 | 100,23 |
| 18758 | | WDR | NBR | A | 20 | 28 | 7 | 97,12 |
| 186136 | | WDR | NBR | AS | 20 | 28 | 7 | 105,23 |
| 187742 | | WDR | NBR | A | 20 | 30 | 4,5 | 155,34 |
| 16927 | | WDR | NBR | B | 20 | 30 | 4,5 | 151,00 |
| 39098 | 186137 | WDR | NBR | AS | 20 | 30 | 5 | 105,44 |
| 16928 | | WDR | NBR | A | 20 | 30 | 5 | 100,23 |
| 18760 | 185618 | WDR | NBR | B | 20 | 30 | 5 | 151,00 |
| 16929 | | WDR | NBR | A | 20 | 30 | 7 | 100,23 |
| 175572 | | WDR | NBR | AS | 20 | 30 | 7 | 105,44 |
| 16931 | 184924 | WDR | NBR | B | 20 | 30 | 7 | 151,00 |
| 44242 | | WDR | NBR | A | 20 | 30 | 8 | 143,16 |
| 38635 | 186089 | WDR | NBR | AS | 20 | 31 | 7 | 117,15 |
| 40476 | | WDR | NBR | AO | 20 | 32 | 4 | 166,99 |
| 18765 | 185621 | WDR | NBR | A | 20 | 32 | 5 | 111,95 |
| 39879 | | WDR | NBR | AS | 20 | 32 | 5 | 117,15 |
| 117544 | | WDR | NBR | B | 20 | 32 | 6 | 167,92 |
| 16932 | 184925 | WDR | NBR | A | 20 | 32 | 7 | 111,95 |
| 16933 | 185222 | WDR | NBR | AS | 20 | 32 | 7 | 117,15 |
| 118689 | | WDR | NBR | ASY | 20 | 32 | 7 | 226,50 |
| 16934 | | WDR | NBR | B | 20 | 32 | 7 | 206,97 |
| 19691 | | WDR | NBR | BS | 20 | 32 | 7 | 175,73 |
| 18766 | | WDR | NBR | AS | 20 | 32 | 8 | 176,15 |
| 19692 | | WDR | NBR | B | 20 | 33 | 10 | 167,92 |

| CODICE | NUOVO CODICE | TIPO | MAT. | SPEC. | d1 mm | d2 mm | b mm | LISTINO 5-2016 X 100 € |
|---|---|---|---|---|---|---|---|---|
| 18770 | | WDR | NBR | A | 20 | 34 | 7 | 169,90 |
| 18771 | | WDR | NBR | AS | 20 | 34 | 7 | 178,40 |
| 18773 | | WDR | NBR | A | 20 | 35 | 5 | 111,95 |
| 16936 | 185223 | WDR | NBR | A | 20 | 35 | 6 | 111,95 |
| 18775 | 185622 | WDR | NBR | AS | 20 | 35 | 6 | 131,47 |
| 24347 | | WDR | NBR | ASY | 20 | 35 | 6 | 226,50 |
| 16938 | 184926 | WDR | NBR | AS | 20 | 35 | 7 | 117,15 |
| 16937 | | WDR | NBR | A | 20 | 35 | 7 | 111,95 |
| 127087 | | WDR | NBR | ASY | 20 | 35 | 7 | 231,68 |
| 16940 | | WDR | NBR | A | 20 | 35 | 10 | 111,95 |
| 18779 | 185625 | WDR | NBR | AS | 20 | 35 | 10 | 117,15 |
| 18780 | | WDR | NBR | B | 20 | 35 | 10 | 167,92 |
| 16941 | | WDR | NBR | C | 20 | 35 | 10 | 305,90 |
| 93130 | | WDR | NBR | B | 20 | 37 | 6 | 186,14 |
| 39105 | 185092 | WDR | NBR | AS | 20 | 37 | 7 | 111,06 |
| 21086 | | WDR | NBR | B | 20 | 37 | 7 | 186,14 |
| 16944 | | WDR | NBR | A | 20 | 38 | 7 | 123,66 |
| 16945 | 185225 | WDR | NBR | AS | 20 | 38 | 7 | 130,17 |
| 18788 | 184998 | WDR | NBR | A | 20 | 38 | 8 | 123,66 |
| 18790 | 185631 | WDR | NBR | AS | 20 | 38 | 8 | 134,07 |
| 16946 | | WDR | NBR | C | 20 | 38 | 8 | 305,90 |
| 18791 | 185632 | WDR | NBR | AS | 20 | 38 | 10 | 229,43 |
| 185226 | | WDR | NBR | A | 20 | 40 | 6 | 126,37 |
| 34920 | | WDR | NBR | AS | 20 | 40 | 6 | 130,17 |
| 16950 | 185227 | WDR | NBR | AS | 20 | 40 | 7 | 130,17 |
| 16949 | 184927 | WDR | NBR | A | 20 | 40 | 7 | 123,66 |
| 16951 | 185228 | WDR | NBR | B | 20 | 40 | 7 | 186,14 |
| 16954 | 185229 | WDR | NBR | A | 20 | 40 | 10 | 123,66 |
| 18795 | | WDR | NBR | AS | 20 | 40 | 10 | 130,17 |
| 16955 | | WDR | NBR | B | 20 | 40 | 10 | 186,14 |
| 16956 | | WDR | NBR | BS | 20 | 40 | 10 | 195,25 |
| 16957 | | WDR | NBR | C | 20 | 40 | 10 | 341,04 |
| 18796 | 184999 | WDR | NBR | AS | 20 | 42 | 7 | 156,20 |
| 16958 | 184928 | WDR | NBR | A | 20 | 42 | 7 | 148,39 |
| 16959 | | WDR | NBR | B | 20 | 42 | 7 | 222,59 |
| 19693 | | WDR | NBR | BS | 20 | 42 | 7 | 234,31 |
| 39111 | 186138 | WDR | NBR | AS | 20 | 42 | 10 | 156,20 |
| 16960 | 185230 | WDR | NBR | A | 20 | 42 | 10 | 148,39 |
| 16961 | | WDR | NBR | B | 20 | 42 | 10 | 222,59 |
| 16962 | | WDR | NBR | C | 20 | 42 | 10 | 341,04 |
| 18798 | 185634 | WDR | NBR | AS | 20 | 45 | 8 | 156,20 |
| 16965 | 184929 | WDR | NBR | A | 20 | 47 | 7 | 171,82 |
| 16966 | | WDR | NBR | AS | 20 | 47 | 7 | 180,94 |
| 16967 | | WDR | NBR | B | 20 | 47 | 7 | 257,74 |
| 39114 | | WDR | NBR | AS | 20 | 47 | 5 | 180,94 |
| 16969 | 185232 | WDR | NBR | A | 20 | 47 | 10 | 171,82 |
| 18805 | 185000 | WDR | NBR | AS | 20 | 47 | 10 | 180,94 |
| 16970 | | WDR | NBR | B | 20 | 47 | 10 | 257,74 |
| 16971 | | WDR | NBR | BS | 20 | 47 | 10 | 270,75 |

| CODICE | NUOVO CODICE | TIPO | MAT. | SPEC. | d1 mm | d2 mm | b mm | LISTINO 5-2016 X 100 € |
|---|---|---|---|---|---|---|---|---|
| 16972 | | WDR | NBR | C | 20 | 47 | 10 | 355,36 |
| 18807 | 185001 | WDR | NBR | A | 20 | 52 | 7 | 177,03 |
| 39115 | | WDR | NBR | AS | 20 | 52 | 7 | 186,14 |
| 16973 | | WDR | NBR | B | 20 | 52 | 7 | 312,41 |
| 18809 | 185636 | WDR | NBR | AS | 20 | 52 | 8 | 186,14 |
| 95601 | | WDR | NBR | AS | 20 | 52 | 10 | 186,14 |
| 16974 | 185233 | WDR | NBR | A | 20 | 52 | 10 | 177,03 |
| 16976 | | WDR | NBR | C | 20 | 52 | 10 | 424,35 |
| 43740 | | WDR | NBR | A | 20 | 72 | 10 | 359,52 |
| 21153 | 186015 | WDR | NBR | A | 20,63 | 30,16 | 6,35 | 174,43 |
| 19895 | 185888 | WDR | NBR | A | 20,63 | 34,92 | 6,35 | 174,43 |
| 19896 | 185889 | WDR | NBR | A | 20,63 | 34,92 | 9,52 | 174,43 |
| 20244 | | WDR | NBR | A | 20,63 | 38,1 | 6,35 | 192,65 |
| 22069 | | WDR | NBR | AO | 21 | 29 | 4 | 142,80 |
| 18812 | | WDR | NBR | B | 21 | 30 | 6,5 | 151,00 |
| 187741 | | WDR | NBR | A | 22 | 28 | 4 | 155,34 |
| 22070 | | WDR | NBR | AO | 22 | 28 | 4 | 142,80 |
| 61768 | | WDR | NBR | BO | 22 | 28 | 4 | 174,25 |
| 83734 | | WDR | NBR | AO | 22 | 29 | 4 | 142,80 |
| 22071 | | WDR | NBR | AO | 22 | 30 | 4 | 142,80 |
| 38561 | 186084 | WDR | NBR | A | 22 | 30 | 7 | 121,32 |
| 18821 | | WDR | NBR | B | 22 | 30 | 7 | 164,01 |
| 26512 | | WDR | NBR | AO | 22 | 30 | 10 | 142,80 |
| 124966 | | WDR | NBR | ASY | 22 | 31 | 6,5 | 226,50 |
| 18823 | | WDR | NBR | A | 22 | 32 | 5 | 111,95 |
| 16980 | 196512 | WDR | NBR | A | 22 | 32 | 5,5 | 111,95 |
| 18824 | | WDR | NBR | B | 22 | 32 | 6 | 167,92 |
| 16981 | 184930 | WDR | NBR | A | 22 | 32 | 7 | 111,95 |
| 18825 | | WDR | NBR | AS | 22 | 32 | 7 | 117,15 |
| 16982 | 185235 | WDR | NBR | B | 22 | 32 | 7 | 167,92 |
| 78156 | 186318 | WDR | NBR | BS | 22 | 32 | 7 | 175,73 |
| 186319 | 186319 | WDR | NBR | A | 22 | 34 | 7 | 111,95 |
| 130996 | | WDR | NBR | AS | 22 | 34 | 7 | 117,15 |
| 18827 | 185003 | WDR | NBR | A | 22 | 35 | 5 | 111,95 |
| 185644 | | WDR | NBR | A | 22 | 35 | 6 | 121,40 |
| 185645 | | WDR | NBR | AS | 22 | 35 | 6 | 114,55 |
| 16983 | | WDR | NBR | A | 22 | 35 | 7 | 111,95 |
| 16984 | 185236 | WDR | NBR | AS | 22 | 35 | 7 | 117,15 |
| 16987 | | WDR | NBR | B | 22 | 35 | 7 | 167,92 |
| 130521 | | WDR | NBR | ASY | 22 | 35 | 7 | 226,50 |
| 16988 | | WDR | NBR | AS | 22 | 35 | 10 | 131,47 |
| 16986 | 184931 | WDR | NBR | A | 22 | 35 | 10 | 111,95 |
| 18834 | | WDR | NBR | B | 22 | 35 | 10 | 193,95 |
| 185647 | | WDR | NBR | A | 22 | 36 | 7 | 190,02 |
| 186140 | | WDR | NBR | AS | 22 | 36 | 10 | 140,50 |
| 184932 | | WDR | NBR | A | 22 | 37 | 7 | 123,66 |
| 16991 | 184933 | WDR | NBR | A | 22 | 38 | 7 | 123,66 |
| 39128 | 186141 | WDR | NBR | AS | 22 | 38 | 7 | 130,17 |
| 131078 | | WDR | NBR | AS | 22 | 39 | 6 | 130,17 |

| CODICE | NUOVO CODICE | TIPO | MAT. | SPEC. | d1 mm | d2 mm | b mm | LISTINO 5-2016 X 100 € |
|---|---|---|---|---|---|---|---|---|
| 16993 | | WDR | NBR | AS | 22 | 40 | 7 | 130,17 |
| 16992 | | WDR | NBR | A | 22 | 40 | 7 | 123,66 |
| 38647 | | WDR | NBR | B | 22 | 40 | 7 | 186,14 |
| 19695 | | WDR | NBR | B | 22 | 40 | 8 | 186,14 |
| 185238 | | WDR | NBR | A | 22 | 40 | 10 | 125,47 |
| 35082 | 186064 | WDR | NBR | AS | 22 | 40 | 10 | 131,73 |
| 16996 | | WDR | NBR | B | 22 | 40 | 10 | 186,14 |
| 16997 | | WDR | NBR | C | 22 | 40 | 10 | 341,04 |
| 16998 | 185239 | WDR | NBR | A | 22 | 42 | 7 | 148,39 |
| 18845 | 196746 | WDR | NBR | AS | 22 | 42 | 7 | 155,81 |
| 16999 | | WDR | NBR | A | 22 | 42 | 10 | 148,39 |
| 17000 | 185240 | WDR | NBR | C | 22 | 42 | 10 | 341,04 |
| 17001 | 184934 | WDR | NBR | A | 22 | 45 | 7 | 148,39 |
| 39133 | | WDR | NBR | AS | 22 | 45 | 7 | 156,20 |
| 18849 | | WDR | NBR | A | 22 | 47 | 7 | 171,82 |
| 38636 | | WDR | NBR | AS | 22 | 47 | 7 | 225,12 |
| 17006 | | WDR | NBR | B | 22 | 47 | 10 | 257,74 |
| 17007 | | WDR | NBR | C | 22 | 47 | 10 | 355,36 |
| 19802 | | WDR | NBR | A | 22 | 52 | 10 | 206,13 |
| 20797 | | WDR | NBR | A | 22,22 | 31,75 | 4,76 | 174,43 |
| 20240 | 185995 | WDR | NBR | A | 22,22 | 31,75 | 6,35 | 174,43 |
| 20243 | | WDR | NBR | A | 22,22 | 34,92 | 4,76 | 174,43 |
| 19897 | 185890 | WDR | NBR | A | 22,22 | 34,92 | 7,93 | 174,43 |
| 19898 | | WDR | NBR | A | 22,22 | 34,92 | 9,52 | 201,76 |
| 19902 | 185891 | WDR | NBR | A | 22,22 | 38,1 | 6,35 | 192,65 |
| 19904 | 185893 | WDR | NBR | A | 22,22 | 38,1 | 9,52 | 192,65 |
| 19908 | 185895 | WDR | NBR | A | 22,22 | 41,27 | 9,52 | 266,85 |
| 20808 | | WDR | NBR | A | 22,22 | 47,62 | 9,52 | 299,39 |
| 20812 | | WDR | NBR | A | 22,22 | 50,8 | 9,52 | 337,14 |
| 17008 | | WDR | NBR | A | 23 | 35 | 7 | 210,17 |
| 74569 | | WDR | NBR | BS | 23 | 40 | 7 | 195,25 |
| 186142 | | WDR | NBR | AS | 23 | 40 | 8 | 143,29 |
| 17013 | | WDR | NBR | C | 23 | 40 | 10 | 341,04 |
| 38627 | | WDR | NBR | A | 23 | 42 | 10 | 148,39 |
| 17014 | 185243 | WDR | NBR | C | 23 | 42 | 10 | 341,04 |
| 19905 | | WDR | NBR | A | 23,81 | 38,1 | 9,52 | 192,65 |
| 75248 | 186312 | WDR | NBR | B | 23,81 | 41,27 | 9,52 | 266,85 |
| 20027 | 185934 | WDR | NBR | A | 23,81 | 44,45 | 9,52 | 266,85 |
| 22072 | | WDR | NBR | AO | 24 | 32 | 4 | 166,99 |
| 35979 | | WDR | NBR | BS | 24 | 32 | 7 | 188,75 |
| 124844 | | WDR | NBR | ASY | 24 | 33 | 5 | 226,50 |
| 18857 | 185658 | WDR | NBR | A | 24 | 34 | 5,5 | 111,95 |
| 17015 | | WDR | NBR | A | 24 | 35 | 7 | 111,95 |
| 38637 | 185084 | WDR | NBR | AS | 24 | 35 | 7 | 117,15 |
| 21595 | 186018 | WDR | NBR | B | 24 | 35 | 7 | 193,95 |
| 18861 | | WDR | NBR | A | 24 | 36 | 6 | 234,64 |
| 18862 | 185660 | WDR | NBR | AS | 24 | 36 | 7 | 134,07 |
| 131092 | | WDR | NBR | AS | 24 | 37 | 5 | 130,17 |
| 39149 | 185094 | WDR | NBR | AS | 24 | 37 | 7 | 188,75 |

| CODICE | NUOVO CODICE | TIPO | MAT. | SPEC. | d1 mm | d2 mm | b mm | LISTINO 5-2016 X 100 € |
|---|---|---|---|---|---|---|---|---|
| 17016 | 185244 | WDR | NBR | A | 24 | 37 | 7 | 123,66 |
| 24352 | | WDR | NBR | ASY | 24 | 40 | 6 | 286,37 |
| 17017 | | WDR | NBR | A | 24 | 40 | 7 | 123,66 |
| 17018 | 185245 | WDR | NBR | AS | 24 | 40 | 7 | 130,17 |
| 76564 | | WDR | NBR | B | 24 | 40 | 7 | 186,14 |
| 17019 | 185246 | WDR | NBR | A | 24 | 40 | 10 | 123,66 |
| 17020 | | WDR | NBR | B | 24 | 40 | 10 | 186,14 |
| 17022 | | WDR | NBR | A | 24 | 42 | 8 | 148,39 |
| 17025 | 185248 | WDR | NBR | AS | 24 | 47 | 7 | 180,94 |
| 17026 | 185249 | WDR | NBR | A | 24 | 47 | 10 | 171,82 |
| 185663 | | WDR | NBR | AS | 24 | 52 | 7 | 231,05 |
| 61142 | | WDR | NBR | A | 24 | 52 | 10 | 177,03 |
| 80516 | | WDR | NBR | BO | 24,7 | 30 | 4 | 174,25 |
| 186299 | | WDR | NBR | BO | 25 | 31 | 2,5 | 132,17 |
| 22073 | | WDR | NBR | AO | 25 | 32 | 4 | 166,99 |
| 17028 | | WDR | NBR | AS | 25 | 32 | 6 | 131,47 |
| 18872 | 185664 | WDR | NBR | A | 25 | 32 | 6 | 111,95 |
| 46411 | | WDR | NBR | AS | 25 | 32 | 10 | 131,47 |
| 22074 | | WDR | NBR | AO | 25 | 33 | 4 | 166,99 |
| 41237 | | WDR | NBR | BO | 25 | 33 | 4 | 206,93 |
| 18875 | | WDR | NBR | A | 25 | 33 | 6 | 111,95 |
| 40113 | | WDR | NBR | BS | 25 | 34 | 7 | 188,75 |
| 22075 | | WDR | NBR | AO | 25 | 35 | 4 | 166,99 |
| 17029 | 184935 | WDR | NBR | A | 25 | 35 | 5 | 111,95 |
| 18877 | 185665 | WDR | NBR | AS | 25 | 35 | 5 | 117,54 |
| 18878 | | WDR | NBR | B | 25 | 35 | 5 | 167,92 |
| 18880 | | WDR | NBR | B | 25 | 35 | 6 | 167,92 |
| 175578 | 186346 | WDR | NBR | AS | 25 | 35 | 6 | 117,54 |
| 72947 | | WDR | NBR | ASY | 25 | 35 | 6 | 226,50 |
| 17031 | | WDR | NBR | AS | 25 | 35 | 7 | 117,15 |
| 17030 | | WDR | NBR | A | 25 | 35 | 7 | 111,95 |
| 184936 | | WDR | NBR | B | 25 | 35 | 7 | 167,36 |
| 19698 | | WDR | NBR | BS | 25 | 35 | 7 | 175,73 |
| 44278 | | WDR | NBR | B | 25 | 35 | 8 | 167,92 |
| 17036 | 185250 | WDR | NBR | A | 25 | 36 | 7 | 123,66 |
| 18884 | | WDR | NBR | B | 25 | 36 | 7 | 186,14 |
| 18885 | | WDR | NBR | AS | 25 | 36 | 8 | 183,60 |
| 17038 | 185251 | WDR | NBR | A | 25 | 37 | 5 | 123,66 |
| 18888 | 185667 | WDR | NBR | AS | 25 | 37 | 6 | 130,17 |
| 17039 | 185252 | WDR | NBR | A | 25 | 37 | 7 | 123,66 |
| 35080 | 186062 | WDR | NBR | AS | 25 | 37 | 7 | 130,17 |
| 18889 | 185668 | WDR | NBR | B | 25 | 37 | 7 | 186,14 |
| 26155 | 186033 | WDR | NBR | AS | 25 | 38 | 7 | 130,17 |
| 17041 | | WDR | NBR | A | 25 | 38 | 7 | 123,66 |
| 17042 | | WDR | NBR | B | 25 | 38 | 7 | 212,18 |
| 186144 | | WDR | NBR | AS | 25 | 38 | 10 | 161,85 |
| 18894 | 185670 | WDR | NBR | A | 25 | 40 | 5 | 123,66 |
| 18896 | | WDR | NBR | B | 25 | 40 | 5 | 212,18 |
| 185672 | | WDR | NBR | AS | 25 | 40 | 6 | 130,17 |

| CODICE | NUOVO CODICE | TIPO | MAT. | SPEC. | d1 mm | d2 mm | b mm | LISTINO 5-2016 X 100 € |
|---|---|---|---|---|---|---|---|---|
| 17045 | 185253 | WDR | NBR | AS | 25 | 40 | 7 | 130,17 |
| 17044 | 184937 | WDR | NBR | A | 25 | 40 | 7 | 123,66 |
| 189346 | | WDR | NBR | AS | 25 | 40 | 7 | 129,84 |
| 17046 | | WDR | NBR | B | 25 | 40 | 7 | 186,14 |
| 44364 | | WDR | NBR | ASY | 25 | 40 | 7 | 286,37 |
| 18899 | 185673 | WDR | NBR | AS | 25 | 40 | 8 | 130,17 |
| 17047 | 184938 | WDR | NBR | A | 25 | 40 | 8 | 123,66 |
| 18680 | 185585 | WDR | NBR | B | 25 | 40 | 8 | 186,14 |
| 19746 | 185868 | WDR | NBR | BS | 25 | 40 | 8 | 195,25 |
| 17048 | | WDR | NBR | C | 25 | 40 | 9 | 341,04 |
| 17049 | 184939 | WDR | NBR | A | 25 | 40 | 10 | 123,66 |
| 17052 | 185255 | WDR | NBR | C | 25 | 40 | 10 | 341,04 |
| 17054 | 185256 | WDR | NBR | A | 25 | 42 | 6 | 148,39 |
| 118692 | | WDR | NBR | ASY | 25 | 42 | 6 | 329,33 |
| 39378 | 185097 | WDR | NBR | AS | 25 | 42 | 7 | 156,20 |
| 18906 | 185006 | WDR | NBR | A | 25 | 42 | 7 | 148,39 |
| 18907 | 185007 | WDR | NBR | B | 25 | 42 | 7 | 222,59 |
| 17056 | | WDR | NBR | BS | 25 | 42 | 7 | 234,31 |
| 175058 | | WDR | NBR | AS | 25 | 42 | 8 | 147,02 |
| 18833 | | WDR | NBR | B | 25 | 42 | 8 | 222,59 |
| 18908 | | WDR | NBR | A | 25 | 42 | 8,5 | 148,39 |
| 40363 | | WDR | NBR | C | 25 | 42 | 9 | 341,04 |
| 18909 | 185674 | WDR | NBR | AS | 25 | 42 | 10 | 156,20 |
| 17059 | 185258 | WDR | NBR | A | 25 | 42 | 10 | 148,39 |
| 18681 | 185586 | WDR | NBR | B | 25 | 42 | 10 | 222,59 |
| 184940 | | WDR | NBR | C | 25 | 42 | 10 | 295,01 |
| 19787 | 185871 | WDR | NBR | A | 25 | 43 | 9 | 148,39 |
| 187745 | | WDR | NBR | A | 25 | 43 | 10 | 233,01 |
| 144048 | | WDR | NBR | AS | 25 | 43 | 9 | 199,73 |
| 18912 | | WDR | NBR | AS | 25 | 44 | 7 | 228,91 |
| 18898 | | WDR | NBR | A | 25 | 45 | 7 | 148,39 |
| 185098 | | WDR | NBR | AS | 25 | 45 | 7 | 155,82 |
| 17063 | | WDR | NBR | A | 25 | 45 | 10 | 148,39 |
| 17064 | | WDR | NBR | AS | 25 | 45 | 10 | 156,20 |
| 19989 | | WDR | NBR | BS | 25 | 45 | 10 | 234,31 |
| 17065 | | WDR | NBR | C | 25 | 45 | 10 | 341,04 |
| 129983 | | WDR | NBR | ASY | 25 | 45 | 11 | 411,77 |
| 17067 | 185260 | WDR | NBR | AS | 25 | 46 | 7 | 180,94 |
| 17066 | 185259 | WDR | NBR | A | 25 | 46 | 7 | 171,82 |
| | 185677 | WDR | NBR | A | 25 | 47 | 6 | 171,83 |
| 17068 | | WDR | NBR | A | 25 | 47 | 7 | 171,82 |
| 17069 | | WDR | NBR | AS | 25 | 47 | 7 | 180,94 |
| 17070 | | WDR | NBR | B | 25 | 47 | 7 | 257,74 |
| 17071 | 185261 | WDR | NBR | A | 25 | 47 | 8 | 171,82 |
| 17072 | | WDR | NBR | AS | 25 | 47 | 8 | 180,42 |
| 18917 | | WDR | NBR | B | 25 | 47 | 8 | 257,74 |
| 17075 | | WDR | NBR | AS | 25 | 47 | 10 | 180,94 |
| 17074 | 185263 | WDR | NBR | A | 25 | 47 | 10 | 171,82 |
| 17076 | | WDR | NBR | B | 25 | 47 | 10 | 257,74 |

| CODICE | NUOVO CODICE | TIPO | MAT. | SPEC. | d1 mm | d2 mm | b mm | LISTINO 5-2016 X 100 € |
|---|---|---|---|---|---|---|---|---|
| 17077 | 185264 | WDR | NBR | BS | 25 | 47 | 10 | 270,75 |
| 17078 | 185265 | WDR | NBR | C | 25 | 47 | 10 | 355,36 |
| 185680 | | WDR | NBR | AS | 25 | 48 | 10 | 267,70 |
| 39383 | | WDR | NBR | AS | 25 | 50 | 8 | 327,08 |
| 18920 | 185681 | WDR | NBR | AS | 25 | 50 | 10 | 180,94 |
| 17080 | 185267 | WDR | NBR | A | 25 | 50 | 10 | 171,82 |
| 17081 | | WDR | NBR | C | 25 | 50 | 10 | 355,36 |
| 38736 | | WDR | NBR | C | 25 | 50 | 12 | 355,36 |
| 17083 | | WDR | NBR | A | 25 | 52 | 7 | 177,03 |
| 17084 | | WDR | NBR | AS | 25 | 52 | 7 | 186,14 |
| 17085 | | WDR | NBR | B | 25 | 52 | 7 | 286,37 |
| 18498 | | WDR | NBR | BS | 25 | 52 | 7 | 300,69 |
| 17086 | | WDR | NBR | A | 25 | 52 | 8 | 177,03 |
| 18923 | 185682 | WDR | NBR | AS | 25 | 52 | 8 | 186,14 |
| 17087 | | WDR | NBR | B | 25 | 52 | 8 | 286,37 |
| 17088 | | WDR | NBR | C | 25 | 52 | 9 | 424,35 |
| 18924 | 185008 | WDR | NBR | AS | 25 | 52 | 10 | 186,14 |
| 17089 | | WDR | NBR | A | 25 | 52 | 10 | 177,03 |
| 17090 | | WDR | NBR | B | 25 | 52 | 10 | 286,37 |
| 17091 | | WDR | NBR | C | 25 | 52 | 10 | 424,35 |
| 17092 | | WDR | NBR | CS | 25 | 52 | 10 | 445,18 |
| 17094 | | WDR | NBR | B | 25 | 52 | 12 | 286,37 |
| 17095 | | WDR | NBR | C | 25 | 52 | 12 | 424,35 |
| 185684 | | WDR | NBR | AS | 25 | 55 | 10 | 227,59 |
| 66361 | 186301 | WDR | NBR | A | 25 | 58 | 10 | 286,37 |
| 130795 | | WDR | NBR | A | 25 | 62 | 5 | 197,11 |
| 185009 | | WDR | NBR | A | 25 | 62 | 7 | 197,11 |
| 39386 | | WDR | NBR | AS | 25 | 62 | 7 | 205,00 |
| 185010 | | WDR | NBR | AS | 25 | 62 | 8 | 283,64 |
| 38121 | | WDR | NBR | AS | 25 | 62 | 10 | 207,03 |
| 17097 | 185268 | WDR | NBR | A | 25 | 62 | 10 | 197,11 |
| 17099 | | WDR | NBR | C | 25 | 62 | 10 | 550,43 |
| 17100 | | WDR | NBR | C | 25 | 62 | 12 | 550,43 |
| 20798 | 186000 | WDR | NBR | A | 25,4 | 34,92 | 4,76 | 174,43 |
| 19899 | | WDR | NBR | A | 25,4 | 36,51 | 6,35 | 192,65 |
| 60635 | | WDR | NBR | BS | 25,4 | 38,1 | 6,35 | 208,27 |
| 19906 | 185894 | WDR | NBR | A | 25,4 | 38,1 | 6,35 | 192,65 |
| 44766 | 186236 | WDR | NBR | AS | 25,4 | 38,1 | 6,35 | 201,76 |
| 20028 | 185935 | WDR | NBR | A | 25,4 | 38,1 | 7,93 | 192,65 |
| 60060 | | WDR | NBR | B | 25,4 | 38,1 | 9,52 | 206,97 |
| 20029 | 185936 | WDR | NBR | A | 25,4 | 38,1 | 9,52 | 192,65 |
| 59772 | 186260 | WDR | NBR | AS | 25,4 | 38,1 | 9,52 | 201,76 |
| 20801 | 186001 | WDR | NBR | A | 25,4 | 39,69 | 7,93 | 192,65 |
| 20031 | | WDR | NBR | A | 25,4 | 41,27 | 7,93 | 266,85 |
| 20032 | 185938 | WDR | NBR | A | 25,4 | 41,27 | 9,52 | 266,85 |
| 19912 | 185045 | WDR | NBR | A | 25,4 | 44,45 | 9,52 | 266,85 |
| 20809 | 186004 | WDR | NBR | A | 25,4 | 47,62 | 6,35 | 299,39 |
| 20033 | | WDR | NBR | A | 25,4 | 47,62 | 9,52 | 299,39 |
| 20034 | | WDR | NBR | A | 25,4 | 50,8 | 6,35 | 337,14 |

| CODICE | NUOVO CODICE | TIPO | MAT. | SPEC. | d1 mm | d2 mm | b mm | LISTINO 5-2016 X 100 € |
|---|---|---|---|---|---|---|---|---|
| 19921 | | WDR | NBR | A | 25,4 | 50,8 | 9,52 | 337,14 |
| 59777 | | WDR | NBR | AS | 25,4 | 50,8 | 9,52 | 354,06 |
| 19922 | | WDR | NBR | A | 25,4 | 50,8 | 12,7 | 337,14 |
| 20035 | 185939 | WDR | NBR | A | 25,4 | 52,38 | 9,52 | 337,14 |
| 20037 | | WDR | NBR | A | 25,4 | 57,15 | 9,52 | 381,40 |
| 22076 | | WDR | NBR | AO | 26 | 34 | 4 | 166,99 |
| 17101 | 185269 | WDR | NBR | A | 26 | 35 | 7 | 111,95 |
| 18932 | 185685 | WDR | NBR | AS | 26 | 36 | 7 | 188,75 |
| 17104 | 185271 | WDR | NBR | A | 26 | 37 | 7 | 123,66 |
| 175589 | | WDR | NBR | AS | 26 | 37 | 7 | 129,87 |
| 18933 | | WDR | NBR | B | 26 | 37 | 7 | 186,14 |
| 18934 | | WDR | NBR | A | 26 | 37 | 10 | 123,66 |
| 175589 | | WDR | NBR | AS | 26 | 37 | 10 | 129,87 |
| 18939 | | WDR | NBR | AS | 26 | 38 | 8 | 149,91 |
| 39391 | 186151 | WDR | NBR | AS | 26 | 40 | 7 | 130,17 |
| 39394 | 186152 | WDR | NBR | AS | 26 | 42 | 7 | 156,20 |
| 18944 | | WDR | NBR | A | 26 | 42 | 7 | 148,39 |
| 75250 | | WDR | NBR | B | 26 | 42 | 7 | 222,59 |
| 18946 | 185691 | WDR | NBR | AS | 26 | 42 | 8 | 156,20 |
| 17106 | | WDR | NBR | C | 26 | 42 | 10 | 341,04 |
| 17107 | 184942 | WDR | NBR | A | 26 | 47 | 7 | 171,82 |
| 18954 | 185692 | WDR | NBR | AS | 26 | 47 | 7 | 180,94 |
| 19747 | | WDR | NBR | C | 26 | 47 | 10 | 355,36 |
| 18957 | 185693 | WDR | NBR | AS | 26 | 52 | 7 | 244,72 |
| 17108 | 185272 | WDR | NBR | A | 26 | 52 | 8 | 177,03 |
| 83443 | | WDR | NBR | A | 26,5 | 47 | 7 | 279,18 |
| 20800 | | WDR | NBR | A | 26,98 | 38,1 | 6,35 | 192,65 |
| 20038 | 185050 | WDR | NBR | A | 26,98 | 44,45 | 9,52 | 266,85 |
| 55931 | | WDR | NBR | BO | 27 | 34 | 3 | 206,93 |
| 17113 | | WDR | NBR | A | 27 | 37 | 7 | 123,66 |
| 69420 | | WDR | NBR | AS | 27 | 37 | 7 | 130,17 |
| 39401 | | WDR | NBR | AS | 27 | 40 | 6 | 130,17 |
| 56918 | | WDR | NBR | A | 27 | 40 | 7 | 219,13 |
| 39402 | | WDR | NBR | AS | 27 | 40 | 7 | 230,07 |
| 17117 | | WDR | NBR | A | 27 | 42 | 7 | 162,71 |
| 17118 | 185273 | WDR | NBR | A | 27 | 42 | 10 | 162,71 |
| 196087 | | WDR | NBR | AS | 27 | 42 | 10 | 168,76 |
| 17120 | | WDR | NBR | B | 27 | 42 | 10 | 222,59 |
| 17121 | | WDR | NBR | A | 27 | 45 | 8 | 223,89 |
| 17122 | | WDR | NBR | A | 27 | 47 | 6 | 171,82 |
| 187746 | | WDR | NBR | A | 27 | 47 | 7 | 258,81 |
| 17124 | 185275 | WDR | NBR | A | 27 | 47 | 10 | 171,82 |
| 17125 | | WDR | NBR | A | 27 | 52 | 8 | 319,90 |
| 130638 | | WDR | NBR | A | 27 | 53 | 7 | 177,03 |
| 40706 | | WDR | NBR | AO | 28 | 34 | 4 | 166,99 |
| 22077 | | WDR | NBR | AO | 28 | 35 | 4 | 166,99 |
| 41251 | | WDR | NBR | BO | 28 | 35 | 5 | 206,93 |
| 22078 | | WDR | NBR | AO | 28 | 37 | 4 | 189,07 |
| 38891 | | WDR | NBR | AS | 28 | 37 | 6 | 197,35 |

| CODICE | NUOVO CODICE | TIPO | MAT. | SPEC. | d1 mm | d2 mm | b mm | LISTINO 5-2016 X 100 € |
|---|---|---|---|---|---|---|---|---|
| 17129 | 185277 | WDR | NBR | AS | 28 | 38 | 7 | 130,17 |
| 17128 | 185276 | WDR | NBR | A | 28 | 38 | 7 | 123,66 |
| 17130 | | WDR | NBR | B | 28 | 38 | 7 | 186,14 |
| 189893 | | WDR | NBR | ASY | 28 | 40 | 6 | 237,79 |
| 17132 | 184943 | WDR | NBR | A | 28 | 40 | 7 | 123,66 |
| 175590 | | WDR | NBR | AS | 28 | 40 | 7 | 130,17 |
| 38649 | | WDR | NBR | B | 28 | 40 | 7 | 186,14 |
| 17134 | 185278 | WDR | NBR | A | 28 | 40 | 10 | 123,66 |
| 44279 | | WDR | NBR | B | 28 | 40 | 10 | 186,14 |
| 17135 | | WDR | NBR | C | 28 | 40 | 10 | 341,04 |
| 17136 | 185279 | WDR | NBR | A | 28 | 42 | 7 | 148,39 |
| 18975 | | WDR | NBR | AS | 28 | 42 | 7 | 156,20 |
| 18692 | | WDR | NBR | A | 28 | 42 | 10 | 148,39 |
| 187744 | | WDR | NBR | A | 28 | 42,5 | 8 | 233,01 |
| 185282 | | WDR | NBR | A | 28 | 45 | 8 | 152,44 |
| 17141 | | WDR | NBR | B | 28 | 45 | 8 | 222,59 |
| 17145 | | WDR | NBR | A | 28 | 47 | 7 | 171,82 |
| 17146 | 185284 | WDR | NBR | AS | 28 | 47 | 7 | 180,94 |
| 18980 | 185012 | WDR | NBR | A | 28 | 47 | 8 | 171,82 |
| 17147 | 185285 | WDR | NBR | B | 28 | 47 | 8 | 257,74 |
| 17148 | 185286 | WDR | NBR | A | 28 | 47 | 10 | 171,82 |
| 18682 | | WDR | NBR | B | 28 | 47 | 10 | 257,74 |
| 34886 | 186056 | WDR | NBR | C | 28 | 47 | 10 | 355,36 |
| 18982 | | WDR | NBR | AS | 28 | 48 | 8 | 208,90 |
| 38909 | | WDR | NBR | A | 28 | 50 | 10 | 171,82 |
| 82086 | | WDR | NBR | B | 28 | 50 | 12 | 257,74 |
| 18989 | 185013 | WDR | NBR | AS | 28 | 52 | 7 | 186,14 |
| 18988 | | WDR | NBR | A | 28 | 52 | 7 | 177,03 |
| 82174 | | WDR | NBR | B | 28 | 52 | 7 | 312,41 |
| 17151 | 185288 | WDR | NBR | A | 28 | 52 | 10 | 177,03 |
| 38911 | 186120 | WDR | NBR | AS | 28 | 52 | 10 | 185,88 |
| 19852 | | WDR | NBR | A | 28 | 62 | 12 | 439,78 |
| 187747 | | WDR | NBR | A | 28,56 | 48 | 6 | 258,81 |
| 79604 | | WDR | NBR | BO | 28,57 | 35,1 | 4 | 239,60 |
| 19907 | | WDR | NBR | A | 28,57 | 38,1 | 6,35 | 192,65 |
| 19910 | 185044 | WDR | NBR | A | 28,57 | 41,27 | 6,35 | 266,85 |
| 20039 | 185940 | WDR | NBR | A | 28,57 | 41,27 | 7,93 | 266,85 |
| 59779 | | WDR | NBR | AS | 28,57 | 41,27 | 7,93 | 279,87 |
| 20040 | 185051 | WDR | NBR | A | 28,57 | 41,27 | 9,52 | 266,85 |
| 20042 | | WDR | NBR | A | 28,57 | 44,45 | 9,52 | 266,85 |
| 59780 | 186261 | WDR | NBR | AS | 28,57 | 44,45 | 9,52 | 279,87 |
| 19913 | 185897 | WDR | NBR | A | 28,57 | 44,45 | 11,11 | 266,85 |
| 19917 | | WDR | NBR | A | 28,57 | 47,62 | 6,35 | 299,39 |
| 19918 | | WDR | NBR | A | 28,57 | 47,62 | 9,52 | 299,39 |
| 59781 | 186262 | WDR | NBR | AS | 28,57 | 47,62 | 9,52 | 313,71 |
| 44814 | 186237 | WDR | NBR | AS | 28,57 | 50,8 | 6,35 | 313,71 |
| 20045 | 185942 | WDR | NBR | A | 28,57 | 52,38 | 9,52 | 337,14 |
| 20046 | | WDR | NBR | A | 28,57 | 53,97 | 9,52 | 337,14 |
| 59783 | | WDR | NBR | AS | 28,57 | 61,91 | 11,11 | 419,02 |

| CODICE | NUOVO CODICE | TIPO | MAT. | SPEC. | d1 mm | d2 mm | b mm | LISTINO 5-2016 X 100 € |
|---|---|---|---|---|---|---|---|---|
| 22079 | | WDR | NBR | AO | 29 | 38 | 4 | 189,07 |
| 17154 | | WDR | NBR | A | 29 | 42 | 7 | 228,96 |
| 38915 | | WDR | NBR | A | 29 | 45 | 9 | 211,12 |
| 17159 | | WDR | NBR | A | 29 | 50 | 10 | 171,82 |
| 41255 | | WDR | NBR | BO | 30 | 35 | 3 | 206,93 |
| 36387 | | WDR | NBR | A | 30 | 36 | 7 | 208,23 |
| 72895 | | WDR | NBR | BO | 30 | 37 | 3 | 239,60 |
| 22080 | | WDR | NBR | AO | 30 | 37 | 4 | 189,07 |
| 40482 | | WDR | NBR | BO | 30 | 37 | 4 | 239,60 |
| 65004 | | WDR | NBR | B | 30 | 38 | 5 | 186,14 |
| 56784 | | WDR | NBR | AO | 30 | 40 | 4 | 189,07 |
| 48932 | | WDR | NBR | BO | 30 | 40 | 4 | 239,60 |
| 185705 | | WDR | NBR | A | 30 | 40 | 4 | 135,05 |
| 18996 | | WDR | NBR | AS | 30 | 40 | 5 | 130,17 |
| 17164 | | WDR | NBR | AS | 30 | 40 | 7 | 130,17 |
| 17163 | | WDR | NBR | A | 30 | 40 | 7 | 123,66 |
| 17165 | | WDR | NBR | B | 30 | 40 | 7 | 186,14 |
| 17166 | 184944 | WDR | NBR | A | 30 | 40 | 10 | 123,66 |
| 18997 | 185706 | WDR | NBR | A | 30 | 42 | 4,5 | 148,39 |
| 18998 | | WDR | NBR | A | 30 | 42 | 6 | 148,39 |
| 46488 | | WDR | NBR | ASY | 30 | 42 | 6 | 329,33 |
| 17167 | 185289 | WDR | NBR | A | 30 | 42 | 7 | 148,39 |
| 636 | | WDR | NBR | AD | 30 | 42 | 7 | 297,07 |
| 175588 | | WDR | NBR | AS | 30 | 42 | 7 | 156,20 |
| 17168 | | WDR | NBR | B | 30 | 42 | 7 | 222,59 |
| 18999 | | WDR | NBR | BS | 30 | 42 | 7 | 234,31 |
| 126225 | | WDR | NBR | ASY | 30 | 42 | 7 | 329,33 |
| 19001 | | WDR | NBR | AS | 30 | 42 | 8 | 156,20 |
| 185707 | | WDR | NBR | AS | 30 | 42 | 10 | 156,20 |
| 17169 | | WDR | NBR | B | 30 | 43 | 8 | 248,62 |
| 64978 | | WDR | NBR | BS | 30 | 43,5 | 10 | 234,31 |
| 26395 | 186036 | WDR | NBR | A | 30 | 44 | 7 | 202,11 |
| 19005 | 185709 | WDR | NBR | AS | 30 | 44 | 7 | 156,20 |
| 17170 | | WDR | NBR | A | 30 | 44 | 10 | 187,82 |
| 17171 | 185290 | WDR | NBR | A | 30 | 45 | 7 | 143,78 |
| 17172 | | WDR | NBR | B | 30 | 45 | 7 | 222,59 |
| 44660 | | WDR | NBR | ASY | 30 | 45 | 7 | 329,33 |
| 17174 | | WDR | NBR | AS | 30 | 45 | 8 | 156,20 |
| 17173 | | WDR | NBR | A | 30 | 45 | 8 | 148,39 |
| 17175 | | WDR | NBR | B | 30 | 45 | 8 | 222,59 |
| 45831 | | WDR | NBR | AD | 30 | 45 | 8,5 | 340,03 |
| 19706 | | WDR | NBR | B | 30 | 45 | 9,5 | 222,59 |
| 185709 | | WDR | NBR | A | 30 | 45 | 10 | 191,82 |
| 38926 | | WDR | NBR | AS | 30 | 45 | 10 | 201,91 |
| 17176 | | WDR | NBR | C | 30 | 45 | 10 | 341,04 |
| 17178 | | WDR | NBR | C | 30 | 46 | 10 | 355,36 |
| 84178 | | WDR | NBR | A | 30 | 47 | 4 | 180,58 |
| 19015 | 185713 | WDR | NBR | A | 30 | 47 | 6 | 171,82 |
| 38928 | | WDR | NBR | AS | 30 | 47 | 6 | 180,94 |

| CODICE | NUOVO CODICE | TIPO | MAT. | SPEC. | d1 mm | d2 mm | b mm | LISTINO 5-2016 X 100 € |
|---|---|---|---|---|---|---|---|---|
| 17180 | 184945 | WDR | NBR | A | 30 | 47 | 7 | 171,82 |
| 175573 | | WDR | NBR | AS | 30 | 47 | 7 | 180,94 |
| 17183 | 185292 | WDR | NBR | A | 30 | 47 | 8 | 171,82 |
| 18701 | | WDR | NBR | AS | 30 | 47 | 8 | 180,94 |
| 25663 | 186031 | WDR | NBR | C | 30 | 47 | 9 | 355,36 |
| 17185 | | WDR | NBR | A | 30 | 47 | 10 | 171,82 |
| 19016 | 185714 | WDR | NBR | AS | 30 | 47 | 10 | 180,94 |
| 17186 | 185293 | WDR | NBR | B | 30 | 47 | 10 | 257,74 |
| 17187 | | WDR | NBR | BS | 30 | 47 | 10 | 270,75 |
| 17188 | | WDR | NBR | C | 30 | 47 | 10 | 355,78 |
| 17189 | | WDR | NBR | CS | 30 | 47 | 10 | 373,59 |
| 38929 | 186123 | WDR | NBR | AS | 30 | 48 | 7 | 180,94 |
| 17190 | | WDR | NBR | A | 30 | 48 | 8 | 171,82 |
| 19017 | 185715 | WDR | NBR | AS | 30 | 48 | 8 | 180,94 |
| 185294 | | WDR | NBR | A | 30 | 48 | 10 | 166,73 |
| 93325 | | WDR | NBR | B | 30 | 48 | 10 | 257,74 |
| 130784 | | WDR | NBR | A | 30 | 50 | 5 | 171,82 |
| 38438 | | WDR | NBR | A | 30 | 50 | 7 | 171,82 |
| 19018 | 185716 | WDR | NBR | AS | 30 | 50 | 7 | 180,94 |
| 17193 | | WDR | NBR | B | 30 | 50 | 7 | 257,74 |
| 18638 | | WDR | NBR | BS | 30 | 50 | 7 | 270,75 |
| 45109 | | WDR | NBR | ASY | 30 | 50 | 7 | 361,87 |
| 17194 | 184946 | WDR | NBR | A | 30 | 50 | 8 | 171,82 |
| 17195 | 185295 | WDR | NBR | A | 30 | 50 | 10 | 171,82 |
| 38933 | 186124 | WDR | NBR | AS | 30 | 50 | 10 | 180,94 |
| 17196 | | WDR | NBR | B | 30 | 50 | 10 | 257,74 |
| 17197 | | WDR | NBR | BS | 30 | 50 | 10 | 270,75 |
| 17198 | 184947 | WDR | NBR | C | 30 | 50 | 10 | 355,36 |
| 17202 | | WDR | NBR | C | 30 | 50 | 12 | 355,36 |
| 185718 | | WDR | NBR | A | 30 | 52 | 5 | 209,29 |
| 17205 | 184948 | WDR | NBR | A | 30 | 52 | 7 | 177,03 |
| 175579 | | WDR | NBR | AS | 30 | 52 | 7 | 186,14 |
| 17206 | | WDR | NBR | B | 30 | 52 | 7 | 286,37 |
| 118695 | | WDR | NBR | ASY | 30 | 52 | 7 | 382,70 |
| 185719 | | WDR | NBR | AS | 30 | 52 | 8 | 192,07 |
| 17208 | | WDR | NBR | C | 30 | 52 | 9 | 424,35 |
| 19024 | | WDR | NBR | AS | 30 | 52 | 10 | 186,14 |
| 17209 | 184949 | WDR | NBR | A | 30 | 52 | 10 | 177,03 |
| 17210 | 185297 | WDR | NBR | B | 30 | 52 | 10 | 286,37 |
| 17211 | | WDR | NBR | BS | 30 | 52 | 10 | 300,69 |
| 17212 | 185298 | WDR | NBR | C | 30 | 52 | 10 | 424,35 |
| 17214 | 185299 | WDR | NBR | A | 30 | 52 | 12 | 259,98 |
| 17215 | 185300 | WDR | NBR | BS | 30 | 52 | 12 | 300,69 |
| 17216 | | WDR | NBR | C | 30 | 52 | 12 | 424,35 |
| 17217 | | WDR | NBR | CS | 30 | 52 | 12 | 445,18 |
| 17219 | 184950 | WDR | NBR | A | 30 | 55 | 7 | 177,03 |
| 38938 | 186126 | WDR | NBR | AS | 30 | 55 | 7 | 186,14 |
| 19028 | | WDR | NBR | AS | 30 | 55 | 10 | 186,14 |
| 17221 | 185302 | WDR | NBR | A | 30 | 55 | 10 | 177,03 |

| CODICE | NUOVO CODICE | TIPO | MAT. | SPEC. | d1 mm | d2 mm | b mm | LISTINO 5-2016 X 100 € |
|---|---|---|---|---|---|---|---|---|
| 17224 | | WDR | NBR | C | 30 | 55 | 10 | 424,35 |
| 17227 | | WDR | NBR | B | 30 | 55 | 12 | 286,37 |
| 17228 | | WDR | NBR | BS | 30 | 55 | 12 | 300,69 |
| 17229 | | WDR | NBR | C | 30 | 55 | 12 | 424,35 |
| 17231 | 185303 | WDR | NBR | A | 30 | 56 | 10 | 221,29 |
| 38943 | 186127 | WDR | NBR | AS | 30 | 56 | 10 | 211,32 |
| 17232 | | WDR | NBR | C | 30 | 56 | 10 | 521,98 |
| 17233 | | WDR | NBR | C | 30 | 56 | 12 | 521,98 |
| 17234 | 189347 | WDR | NBR | A | 30 | 60 | 10 | 179,76 |
| 74030 | 196149 | WDR | NBR | AS | 30 | 60 | 10 | 188,44 |
| 17236 | | WDR | NBR | BS | 30 | 60 | 10 | 314,89 |
| 17237 | | WDR | NBR | C | 30 | 60 | 10 | 497,12 |
| 17238 | | WDR | NBR | CS | 30 | 60 | 10 | 521,92 |
| 17241 | | WDR | NBR | C | 30 | 60 | 12 | 497,12 |
| 18477 | | WDR | NBR | B | 30 | 62 | 6 | 328,52 |
| 195684 | | WDR | NBR | AS | 30 | 62 | 7 | 207,03 |
| 17243 | 184951 | WDR | NBR | A | 30 | 62 | 7 | 197,11 |
| 17245 | | WDR | NBR | B | 30 | 62 | 7 | 328,52 |
| 19710 | 185864 | WDR | NBR | BS | 30 | 62 | 7 | 344,64 |
| 19031 | 185721 | WDR | NBR | AS | 30 | 62 | 8 | 207,03 |
| 17247 | | WDR | NBR | C | 30 | 62 | 9 | 550,43 |
| 38945 | 185088 | WDR | NBR | AS | 30 | 62 | 10 | 207,03 |
| 17248 | 185305 | WDR | NBR | A | 30 | 62 | 10 | 197,11 |
| 37907 | | WDR | NBR | B | 30 | 62 | 10 | 328,52 |
| 17249 | | WDR | NBR | BS | 30 | 62 | 10 | 344,64 |
| 17250 | | WDR | NBR | C | 30 | 62 | 10 | 550,43 |
| 44280 | | WDR | NBR | B | 30 | 62 | 12 | 328,52 |
| 17254 | | WDR | NBR | C | 30 | 62 | 12 | 550,43 |
| 19033 | | WDR | NBR | A | 30 | 65 | 10 | 435,90 |
| 26357 | | WDR | NBR | BS | 30 | 72 | 7 | 414,06 |
| 19034 | 185015 | WDR | NBR | AS | 30 | 72 | 8 | 273,98 |
| 37163 | 185077 | WDR | NBR | AS | 30 | 72 | 10 | 273,98 |
| 17256 | 185306 | WDR | NBR | A | 30 | 72 | 10 | 260,34 |
| 17258 | | WDR | NBR | C | 30 | 72 | 10 | 663,25 |
| 17261 | | WDR | NBR | C | 30 | 72 | 12 | 663,25 |
| 20048 | 185943 | WDR | NBR | A | 30,16 | 42,86 | 9,52 | 266,85 |
| 20254 | | WDR | NBR | BS | 30,16 | 43,65 | 12,7 | 234,31 |
| 19914 | | WDR | NBR | A | 30,16 | 44,45 | 4,76 | 266,85 |
| 76152 | | WDR | NBR | A | 30,16 | 50,8 | 7,93 | 337,14 |
| 19924 | 185901 | WDR | NBR | A | 30,16 | 50,8 | 9,52 | 337,14 |
| 59819 | 186264 | WDR | NBR | AS | 30,16 | 50,8 | 9,52 | 354,06 |
| 17263 | | WDR | NBR | A | 31 | 47 | 7 | 179,63 |
| 17266 | | WDR | NBR | A | 31 | 52 | 7 | 229,35 |
| 61692 | | WDR | NBR | BO | 31,75 | 38,1 | 3,96 | 239,60 |
| 20802 | | WDR | NBR | A | 31,75 | 41,27 | 6,35 | 266,85 |
| 21523 | | WDR | NBR | AS | 31,75 | 41,27 | 6,35 | 279,87 |
| 20803 | 186002 | WDR | NBR | A | 31,75 | 42,86 | 9,52 | 266,85 |
| 20807 | | WDR | NBR | A | 31,75 | 44,45 | 6,53 | 266,84 |
| 19915 | 185898 | WDR | NBR | A | 31,75 | 44,45 | 9,52 | 266,85 |

| CODICE | NUOVO CODICE | TIPO | MAT. | SPEC. | d1 mm | d2 mm | b mm | LISTINO 5-2016 X 100 € |
|---|---|---|---|---|---|---|---|---|
| 59821 | 186266 | WDR | NBR | AS | 31,75 | 44,45 | 9,52 | 279,87 |
| 20228 | | WDR | NBR | A | 31,75 | 44,45 | 9,92 | 266,85 |
| 20051 | | WDR | NBR | A | 31,75 | 47,62 | 6,35 | 299,39 |
| 20052 | 185945 | WDR | NBR | A | 31,75 | 47,62 | 7,93 | 299,39 |
| 20053 | | WDR | NBR | A | 31,75 | 47,62 | 9,52 | 299,39 |
| 19866 | 185878 | WDR | NBR | AS | 31,75 | 47,62 | 11,11 | 313,71 |
| 20811 | | WDR | NBR | A | 31,75 | 49,21 | 11,11 | 299,39 |
| 20237 | 185993 | WDR | NBR | AS | 31,75 | 50,8 | 7,93 | 354,06 |
| 20056 | 185947 | WDR | NBR | A | 31,75 | 50,8 | 9,52 | 337,14 |
| 19925 | 185902 | WDR | NBR | A | 31,75 | 50,8 | 12,7 | 337,14 |
| 59824 | 185111 | WDR | NBR | AS | 31,75 | 50,8 | 12,7 | 354,06 |
| 20057 | 185948 | WDR | NBR | A | 31,75 | 52,38 | 9,52 | 337,14 |
| 19931 | | WDR | NBR | A | 31,75 | 53,97 | 7,93 | 337,14 |
| 20058 | 185949 | WDR | NBR | A | 31,75 | 53,97 | 9,52 | 337,14 |
| 59825 | 186267 | WDR | NBR | AS | 31,75 | 53,97 | 9,52 | 354,06 |
| 20813 | 186006 | WDR | NBR | A | 31,75 | 55,56 | 11,11 | 381,40 |
| 19935 | | WDR | NBR | A | 31,75 | 57,15 | 7,93 | 381,40 |
| 19936 | 185046 | WDR | NBR | A | 31,75 | 57,15 | 9,52 | 381,40 |
| 20059 | | WDR | NBR | A | 31,75 | 57,15 | 12,7 | 381,40 |
| 20060 | 185950 | WDR | NBR | A | 31,75 | 60,32 | 9,52 | 399,19 |
| 20061 | 185951 | WDR | NBR | A | 31,75 | 63,5 | 9,52 | 399,19 |
| 20840 | | WDR | NBR | A | 31,75 | 69,85 | 9,52 | 431,42 |
| 78227 | 185116 | WDR | NBR | A | 32 | 40 | 7 | 123,66 |
| 22081 | | WDR | NBR | AO | 32 | 42 | 4 | 209,34 |
| 41266 | | WDR | NBR | BO | 32 | 42 | 4 | 267,43 |
| 17270 | 185308 | WDR | NBR | A | 32 | 42 | 7 | 148,39 |
| 19041 | | WDR | NBR | B | 32 | 42 | 7 | 248,62 |
| 78248 | | WDR | NBR | BS | 32 | 42 | 7 | 234,31 |
| 20218 | | WDR | NBR | A | 32 | 44 | 8 | 180,11 |
| 74445 | | WDR | NBR | BS | 32 | 44 | 10 | 234,31 |
| 22082 | | WDR | NBR | AO | 32 | 45 | 4 | 209,34 |
| 185309 | | WDR | NBR | A | 32 | 45 | 6 | 165,12 |
| 17272 | 185310 | WDR | NBR | A | 32 | 45 | 7 | 148,39 |
| 19044 | | WDR | NBR | AS | 32 | 45 | 7 | 156,20 |
| 17273 | | WDR | NBR | B | 32 | 45 | 7 | 222,59 |
| 187787 | | WDR | NBR | AS | 32 | 47 | 6 | 257,55 |
| 17275 | 185311 | WDR | NBR | A | 32 | 47 | 7 | 171,82 |
| 196020 | | WDR | NBR | AS | 32 | 47 | 7 | 180,94 |
| 17276 | | WDR | NBR | B | 32 | 47 | 7 | 257,74 |
| 37579 | | WDR | NBR | BS | 32 | 47 | 7 | 270,75 |
| 130997 | | WDR | NBR | AS | 32 | 47 | 8 | 180,94 |
| 17278 | | WDR | NBR | C | 32 | 47 | 9 | 355,36 |
| 39409 | | WDR | NBR | AS | 32 | 47 | 10 | 180,94 |
| 17280 | 185313 | WDR | NBR | B | 32 | 47 | 10 | 270,75 |
| 25966 | | WDR | NBR | BS | 32 | 47 | 10 | 270,75 |
| 17281 | | WDR | NBR | C | 32 | 47 | 10 | 355,36 |
| 17282 | 185314 | WDR | NBR | A | 32 | 48 | 7 | 221,29 |
| 187748 | | WDR | NBR | A | 32 | 48 | 8 | 258,81 |
| 19049 | 185016 | WDR | NBR | AS | 32 | 48 | 8 | 172,90 |

| CODICE | NUOVO CODICE | TIPO | MAT. | SPEC. | d1 mm | d2 mm | b mm | LISTINO 5-2016 X 100 € |
|---|---|---|---|---|---|---|---|---|
| 19712 | | WDR | NBR | B | 32 | 50 | 7 | 257,74 |
| 17285 | 185315 | WDR | NBR | A | 32 | 50 | 8 | 171,82 |
| 17286 | 185316 | WDR | NBR | A | 32 | 50 | 10 | 171,82 |
| 185072 | | WDR | NBR | AS | 32 | 50 | 10 | 180,41 |
| 17287 | | WDR | NBR | C | 32 | 50 | 10 | 355,36 |
| 17289 | | WDR | NBR | C | 32 | 50 | 12 | 355,36 |
| 18702 | 185594 | WDR | NBR | AS | 32 | 52 | 7 | 186,14 |
| 17291 | 185317 | WDR | NBR | A | 32 | 52 | 7 | 177,03 |
| 38357 | | WDR | NBR | B | 32 | 52 | 8 | 312,41 |
| 17294 | | WDR | NBR | C | 32 | 52 | 9 | 424,35 |
| 39187 | 186146 | WDR | NBR | AS | 32 | 52 | 10 | 186,14 |
| 17295 | 185319 | WDR | NBR | A | 32 | 52 | 10 | 177,03 |
| 17296 | | WDR | NBR | B | 32 | 52 | 10 | 286,37 |
| 17297 | | WDR | NBR | C | 32 | 52 | 10 | 424,35 |
| 40261 | | WDR | NBR | B | 32 | 52 | 12 | 286,37 |
| 17299 | 185320 | WDR | NBR | BS | 32 | 52 | 12 | 300,69 |
| 34887 | | WDR | NBR | C | 32 | 52 | 12 | 424,35 |
| 17301 | 185321 | WDR | NBR | A | 32 | 55 | 10 | 177,03 |
| 39194 | | WDR | NBR | AS | 32 | 55 | 10 | 197,86 |
| 17302 | | WDR | NBR | B | 32 | 55 | 10 | 286,37 |
| 17303 | | WDR | NBR | C | 32 | 55 | 10 | 424,35 |
| 17304 | 185322 | WDR | NBR | C | 32 | 55 | 12 | 424,35 |
| 17306 | 185324 | WDR | NBR | AS | 32 | 56 | 10 | 197,86 |
| 17305 | 185323 | WDR | NBR | A | 32 | 56 | 10 | 188,75 |
| 17307 | | WDR | NBR | B | 32 | 56 | 10 | 315,01 |
| 19713 | | WDR | NBR | C | 32 | 56 | 12 | 521,98 |
| 17309 | | WDR | NBR | B | 32 | 60 | 10 | 300,01 |
| 17310 | | WDR | NBR | C | 32 | 60 | 10 | 497,12 |
| 17311 | | WDR | NBR | C | 32 | 60 | 12 | 497,12 |
| 19057 | | WDR | NBR | A | 32 | 62 | 8 | 290,10 |
| 17312 | | WDR | NBR | A | 32 | 62 | 10 | 290,09 |
| 17313 | | WDR | NBR | C | 32 | 62 | 10 | 550,43 |
| 17315 | | WDR | NBR | B | 32 | 65 | 10 | 328,52 |
| 17316 | | WDR | NBR | C | 32 | 65 | 10 | 550,43 |
| 17317 | | WDR | NBR | C | 32 | 65 | 12 | 550,43 |
| 185872 | | WDR | NBR | A | 33 | 43 | 7 | 229,75 |
| 185017 | | WDR | NBR | A | 33 | 45 | 7 | 162,40 |
| 19067 | 185727 | WDR | NBR | A | 33 | 50 | 6 | 171,82 |
| 17321 | 184953 | WDR | NBR | AS | 33 | 50 | 6 | 185,29 |
| 17322 | 185325 | WDR | NBR | A | 33 | 50 | 10 | 171,83 |
| 39427 | | WDR | NBR | AS | 33 | 50 | 10 | 180,94 |
| 17323 | | WDR | NBR | BS | 33 | 50 | 12 | 270,75 |
| 19070 | 185018 | WDR | NBR | A | 33 | 52 | 6 | 249,93 |
| 19749 | | WDR | NBR | C | 33 | 62 | 12 | 550,43 |
| 19919 | 185899 | WDR | NBR | A | 33,33 | 47,62 | 7,93 | 299,39 |
| 69433 | | WDR | NBR | A | 33,33 | 49,21 | 4,76 | 299,39 |
| 60099 | | WDR | NBR | B | 33,33 | 50,8 | 9,52 | 315,02 |
| 27532 | 186046 | WDR | NBR | B | 33,33 | 58,04 | 12,7 | 315,01 |
| 19071 | | WDR | NBR | A | 34 | 44 | 7 | 284,40 |

| CODICE | NUOVO CODICE | TIPO | MAT. | SPEC. | d1 mm | d2 mm | b mm | LISTINO 5-2016 X 100 € |
|---|---|---|---|---|---|---|---|---|
| 35960 | | WDR | NBR | AS | 34 | 45 | 7 | 276,02 |
| 34861 | 186055 | WDR | NBR | B | 34 | 46 | 8 | 257,74 |
| 39429 | | WDR | NBR | AS | 34 | 46 | 8 | 180,42 |
| 17326 | | WDR | NBR | A | 34 | 46 | 10 | 171,82 |
| 38630 | | WDR | NBR | A | 34 | 47 | 9 | 160,31 |
| 19078 | | WDR | NBR | AS | 34 | 48 | 8 | 243,95 |
| 17328 | | WDR | NBR | A | 34 | 50 | 10 | 171,82 |
| 17329 | | WDR | NBR | C | 34 | 50 | 10 | 355,36 |
| 17330 | | WDR | NBR | B | 34 | 52 | 7 | 286,37 |
| 17332 | 185327 | WDR | NBR | A | 34 | 52 | 8 | 177,03 |
| 78830 | 186320 | WDR | NBR | AS | 34 | 52 | 10 | 186,14 |
| 17334 | | WDR | NBR | C | 34 | 52 | 10 | 424,35 |
| 187750 | | WDR | NBR | A | 34 | 58 | 13 | 425,16 |
| 17338 | | WDR | NBR | C | 34 | 58 | 13 | 521,98 |
| 17339 | | WDR | NBR | A | 34 | 62 | 10 | 311,06 |
| 17340 | | WDR | NBR | C | 34 | 62 | 10 | 550,43 |
| 19086 | | WDR | NBR | AS | 34 | 72 | 10 | 517,03 |
| 17342 | | WDR | NBR | C | 34 | 72 | 10 | 663,25 |
| 17343 | | WDR | NBR | C | 34 | 72 | 12 | 663,25 |
| 19920 | | WDR | NBR | A | 34,92 | 47,62 | 7,93 | 299,39 |
| 20063 | 185952 | WDR | NBR | A | 34,92 | 50,8 | 9,52 | 337,14 |
| 59830 | 186268 | WDR | NBR | AS | 34,92 | 50,8 | 9,52 | 354,06 |
| 20064 | | WDR | NBR | A | 34,92 | 50,8 | 12,7 | 337,14 |
| 20245 | | WDR | NBR | A | 34,92 | 52,38 | 6,35 | 337,14 |
| 20065 | | WDR | NBR | A | 34,92 | 52,38 | 9,52 | 337,14 |
| 19928 | | WDR | NBR | A | 34,92 | 52,38 | 12,7 | 337,14 |
| 19932 | 185906 | WDR | NBR | A | 34,92 | 53,97 | 7,93 | 337,14 |
| 19992 | 185921 | WDR | NBR | A | 34,92 | 53,97 | 9,52 | 337,14 |
| 59831 | | WDR | NBR | AS | 34,92 | 53,97 | 9,52 | 354,06 |
| 60670 | | WDR | NBR | BS | 34,92 | 57,15 | 7,93 | 330,63 |
| 59832 | | WDR | NBR | AS | 34,92 | 57,15 | 9,52 | 400,92 |
| 19938 | 185908 | WDR | NBR | A | 34,92 | 57,15 | 12,7 | 381,40 |
| 20835 | 186011 | WDR | NBR | A | 34,92 | 60,32 | 9,52 | 399,19 |
| 59834 | | WDR | NBR | AS | 34,92 | 60,32 | 9,52 | 419,02 |
| 19988 | 185920 | WDR | NBR | A | 34,92 | 60,32 | 12,7 | 399,19 |
| 59835 | | WDR | NBR | AS | 34,92 | 63,5 | 9,52 | 419,02 |
| 19946 | | WDR | NBR | A | 34,92 | 63,5 | 12,7 | 399,19 |
| 22083 | | WDR | NBR | AO | 35 | 42 | 4 | 209,34 |
| 110713 | | WDR | NBR | BO | 35 | 42 | 4 | 267,43 |
| 19087 | 185732 | WDR | NBR | AS | 35 | 42 | 8 | 159,99 |
| 22084 | | WDR | NBR | AO | 35 | 45 | 4 | 209,34 |
| 65118 | | WDR | NBR | A | 35 | 45 | 5 | 164,01 |
| 40778 | 186208 | WDR | NBR | A | 35 | 45 | 6 | 148,39 |
| 17345 | | WDR | NBR | A | 35 | 45 | 7 | 148,39 |
| 17346 | 185329 | WDR | NBR | AS | 35 | 45 | 7 | 156,20 |
| 17347 | | WDR | NBR | B | 35 | 45 | 7 | 222,59 |
| 21002 | 185059 | WDR | NBR | A | 35 | 45 | 10 | 148,39 |
| 17348 | | WDR | NBR | A | 35 | 47 | 6 | 179,63 |
| 17349 | | WDR | NBR | B | 35 | 47 | 6 | 257,74 |

| CODICE | NUOVO CODICE | TIPO | MAT. | SPEC. | d1 mm | d2 mm | b mm | LISTINO 5-2016 X 100 € |
|---|---|---|---|---|---|---|---|---|
| 17350 | | WDR | NBR | A | 35 | 47 | 7 | 171,82 |
| 17351 | | WDR | NBR | AS | 35 | 47 | 7 | 180,94 |
| 17352 | | WDR | NBR | B | 35 | 47 | 7 | 257,74 |
| 17353 | 185330 | WDR | NBR | A | 35 | 47 | 10 | 172,32 |
| 19091 | 185734 | WDR | NBR | AS | 35 | 47 | 10 | 180,94 |
| 17354 | | WDR | NBR | B | 35 | 47 | 10 | 257,74 |
| 17355 | | WDR | NBR | C | 35 | 47 | 10 | 355,36 |
| 39438 | 186155 | WDR | NBR | AS | 35 | 48 | 7 | 183,27 |
| 19092 | 185735 | WDR | NBR | AS | 35 | 48 | 8 | 180,94 |
| 17357 | 185331 | WDR | NBR | A | 35 | 50 | 7 | 171,82 |
| 37302 | 186074 | WDR | NBR | AS | 35 | 50 | 7 | 180,94 |
| 17358 | | WDR | NBR | B | 35 | 50 | 7 | 270,75 |
| 38683 | | WDR | NBR | BS | 35 | 50 | 7 | 270,75 |
| 17359 | 185332 | WDR | NBR | A | 35 | 50 | 8 | 171,82 |
| 19093 | 185021 | WDR | NBR | AS | 35 | 50 | 8 | 180,94 |
| 44281 | 186233 | WDR | NBR | B | 35 | 50 | 8 | 257,74 |
| 40373 | | WDR | NBR | C | 35 | 50 | 9 | 355,36 |
| 19094 | | WDR | NBR | AS | 35 | 50 | 10 | 180,94 |
| 17360 | 185333 | WDR | NBR | A | 35 | 50 | 10 | 171,82 |
| 17362 | | WDR | NBR | BS | 35 | 50 | 10 | 270,75 |
| 17363 | 185335 | WDR | NBR | C | 35 | 50 | 10 | 355,36 |
| 17366 | | WDR | NBR | BS | 35 | 50 | 12 | 270,75 |
| 17367 | | WDR | NBR | C | 35 | 50 | 12 | 355,36 |
| 56981 | 186246 | WDR | NBR | AS | 35 | 52 | 6 | 186,14 |
| 17369 | | WDR | NBR | A | 35 | 52 | 7 | 177,03 |
| 17370 | | WDR | NBR | AS | 35 | 52 | 7 | 186,14 |
| 17371 | | WDR | NBR | B | 35 | 52 | 7 | 286,37 |
| 69012 | | WDR | NBR | BS | 35 | 52 | 7 | 300,69 |
| 19096 | 185736 | WDR | NBR | AS | 35 | 52 | 8 | 186,14 |
| 17373 | | WDR | NBR | A | 35 | 52 | 8 | 177,03 |
| 17376 | | WDR | NBR | C | 35 | 52 | 9 | 424,35 |
| 17378 | 185337 | WDR | NBR | A | 35 | 52 | 10 | 177,03 |
| 17379 | 185338 | WDR | NBR | AS | 35 | 52 | 10 | 186,14 |
| 19715 | 185865 | WDR | NBR | B | 35 | 52 | 10 | 286,37 |
| 17380 | 185339 | WDR | NBR | C | 35 | 52 | 10 | 424,35 |
| 19716 | | WDR | NBR | B | 35 | 52 | 12 | 312,41 |
| 17383 | | WDR | NBR | C | 35 | 52 | 12 | 424,35 |
| 19101 | 185737 | WDR | NBR | A | 35 | 54 | 10 | 177,03 |
| 17385 | | WDR | NBR | A | 35 | 55 | 8 | 177,03 |
| 19102 | | WDR | NBR | AS | 35 | 55 | 8 | 171,82 |
| 17386 | | WDR | NBR | B | 35 | 55 | 8 | 286,37 |
| 19103 | 185738 | WDR | NBR | AS | 35 | 55 | 9 | 249,93 |
| 17387 | 185341 | WDR | NBR | A | 35 | 55 | 10 | 177,03 |
| 17388 | 185342 | WDR | NBR | AS | 35 | 55 | 10 | 186,14 |
| 17389 | | WDR | NBR | B | 35 | 55 | 10 | 286,37 |
| 17390 | | WDR | NBR | C | 35 | 55 | 10 | 424,35 |
| 17391 | | WDR | NBR | B | 35 | 55 | 12 | 286,37 |
| 17392 | | WDR | NBR | C | 35 | 55 | 12 | 424,35 |
| 17393 | | WDR | NBR | A | 35 | 56 | 8 | 188,75 |

| CODICE | NUOVO CODICE | TIPO | MAT. | SPEC. | d1 mm | d2 mm | b mm | LISTINO 5-2016 X 100 € |
|---|---|---|---|---|---|---|---|---|
| 17394 | 185343 | WDR | NBR | A | 35 | 56 | 10 | 188,75 |
| 35814 | 186066 | WDR | NBR | AS | 35 | 56 | 10 | 197,86 |
| 17395 | | WDR | NBR | BS | 35 | 56 | 10 | 356,67 |
| 17396 | | WDR | NBR | C | 35 | 56 | 10 | 521,98 |
| 17399 | | WDR | NBR | AS | 35 | 56 | 12 | 221,29 |
| 17401 | | WDR | NBR | C | 35 | 56 | 12 | 521,98 |
| 17404 | 185345 | WDR | NBR | A | 35 | 58 | 10 | 188,75 |
| 39453 | 186157 | WDR | NBR | AS | 35 | 58 | 10 | 197,86 |
| 40375 | | WDR | NBR | C | 35 | 58 | 10 | 521,98 |
| 187751 | | WDR | NBR | A | 35 | 58 | 13 | 425,16 |
| 17408 | | WDR | NBR | B | 35 | 58 | 13 | 315,01 |
| 39454 | 185099 | WDR | NBR | AS | 35 | 60 | 10 | 188,44 |
| 17410 | 185346 | WDR | NBR | A | 35 | 60 | 10 | 179,76 |
| 17411 | | WDR | NBR | B | 35 | 60 | 10 | 324,80 |
| 17412 | | WDR | NBR | C | 35 | 60 | 10 | 497,12 |
| 185347 | | WDR | NBR | A | 35 | 60 | 12 | 325,30 |
| 17414 | | WDR | NBR | C | 35 | 60 | 12 | 497,12 |
| 27574 | 186047 | WDR | NBR | B | 35 | 62 | 5 | 328,52 |
| 17416 | | WDR | NBR | A | 35 | 62 | 7 | 197,11 |
| 34807 | | WDR | NBR | AS | 35 | 62 | 7 | 207,03 |
| 17417 | | WDR | NBR | B | 35 | 62 | 7 | 328,52 |
| 19720 | | WDR | NBR | BS | 35 | 62 | 7 | 344,64 |
| 39456 | 186158 | WDR | NBR | A | 35 | 62 | 8 | 226,69 |
| 17418 | 185348 | WDR | NBR | AS | 35 | 62 | 8 | 238,02 |
| 17419 | 185349 | WDR | NBR | B | 35 | 62 | 8 | 328,52 |
| 17420 | | WDR | NBR | C | 35 | 62 | 9 | 550,43 |
| 17422 | | WDR | NBR | AS | 35 | 62 | 10 | 207,03 |
| 17421 | | WDR | NBR | A | 35 | 62 | 10 | 197,11 |
| 19109 | | WDR | NBR | B | 35 | 62 | 10 | 328,52 |
| 17423 | | WDR | NBR | BS | 35 | 62 | 10 | 344,64 |
| 17424 | | WDR | NBR | C | 35 | 62 | 10 | 550,43 |
| 17426 | | WDR | NBR | AS | 35 | 62 | 12 | 207,03 |
| 19721 | | WDR | NBR | B | 35 | 62 | 12 | 328,52 |
| 17427 | | WDR | NBR | BS | 35 | 62 | 12 | 344,64 |
| 17428 | | WDR | NBR | C | 35 | 62 | 12 | 550,43 |
| 19110 | 185742 | WDR | NBR | A | 35 | 65 | 10 | 197,11 |
| 17432 | | WDR | NBR | C | 35 | 65 | 10 | 550,43 |
| 40277 | | WDR | NBR | BS | 35 | 65 | 12 | 344,64 |
| 17435 | | WDR | NBR | C | 35 | 65 | 12 | 550,43 |
| 83417 | | WDR | NBR | A | 35 | 67 | 7 | 322,33 |
| 17437 | 185352 | WDR | NBR | A | 35 | 68 | 10 | 252,90 |
| 39462 | 186159 | WDR | NBR | AS | 35 | 68 | 10 | 266,54 |
| 187757 | | WDR | NBR | A | 35 | 70 | 10 | 504,79 |
| 17439 | | WDR | NBR | B | 35 | 70 | 10 | 364,48 |
| 17440 | | WDR | NBR | C | 35 | 70 | 10 | 609,94 |
| 17442 | | WDR | NBR | C | 35 | 70 | 12 | 609,94 |
| 39464 | 185100 | WDR | NBR | A | 35 | 72 | 7 | 260,34 |
| 73078 | | WDR | NBR | AS | 35 | 72 | 7 | 273,98 |
| 17443 | | WDR | NBR | BS | 35 | 72 | 7 | 438,86 |

| CODICE | NUOVO CODICE | TIPO | MAT. | SPEC. | d1 mm | d2 mm | b mm | LISTINO 5-2016 X 100 € |
|---|---|---|---|---|---|---|---|---|
| 19111 | 185022 | WDR | NBR | AS | 35 | 72 | 10 | 273,98 |
| 17444 | | WDR | NBR | A | 35 | 72 | 10 | 260,34 |
| 17445 | | WDR | NBR | B | 35 | 72 | 10 | 394,23 |
| 17447 | | WDR | NBR | C | 35 | 72 | 10 | 663,25 |
| 17448 | 185353 | WDR | NBR | A | 35 | 72 | 12 | 260,34 |
| | 185354 | WDR | NBR | AS | 35 | 72 | 12 | 314,33 |
| 17450 | | WDR | NBR | B | 35 | 72 | 12 | 394,23 |
| 17451 | | WDR | NBR | BS | 35 | 72 | 12 | 317,37 |
| 17452 | | WDR | NBR | C | 35 | 72 | 12 | 663,25 |
| 117038 | | WDR | NBR | A | 35 | 80 | 8 | 374,37 |
| 186235 | 196131 | WDR | NBR | AS | 35 | 80 | 8 | 406,38 |
| 24343 | | WDR | NBR | A | 35 | 80 | 10 | 374,37 |
| 27597 | | WDR | NBR | AS | 35 | 80 | 10 | 285,13 |
| 36617 | | WDR | NBR | A | 35 | 80 | 12 | 271,50 |
| 34804 | | WDR | NBR | AS | 35 | 80 | 12 | 285,13 |
| 17453 | | WDR | NBR | C | 35 | 80 | 12 | 728,95 |
| 17454 | | WDR | NBR | C | 35 | 80 | 13 | 728,95 |
| 44282 | | WDR | NBR | B | 35,8 | 68 | 10 | 364,48 |
| 129722 | | WDR | NBR | BO | 36 | 42 | 3,5 | 267,43 |
| 39471 | 186160 | WDR | NBR | AS | 36 | 47 | 7 | 180,94 |
| 17455 | 184954 | WDR | NBR | A | 36 | 47 | 7 | 169,59 |
| 20226 | | WDR | NBR | B | 36 | 47 | 7 | 257,74 |
| 17457 | 184955 | WDR | NBR | A | 36 | 50 | 7 | 171,82 |
| 17458 | | WDR | NBR | A | 36 | 50 | 10 | 182,24 |
| 117884 | | WDR | NBR | B | 36 | 50,8 | 8 | 286,37 |
| 43928 | | WDR | NBR | BS | 36 | 50,8 | 8 | 300,69 |
| 17459 | 185355 | WDR | NBR | A | 36 | 52 | 7 | 177,03 |
| 40812 | | WDR | NBR | AS | 36 | 52 | 7 | 186,14 |
| 195893 | | WDR | NBR | AS | 36 | 52 | 9 | 186,14 |
| 17461 | | WDR | NBR | A | 36 | 54 | 7,5 | 249,93 |
| 39058 | | WDR | NBR | A | 36 | 54 | 7 | 242,32 |
| 44223 | | WDR | NBR | A | 36 | 54 | 10 | 242,32 |
| 44283 | | WDR | NBR | B | 36 | 54 | 10 | 286,37 |
| 17463 | | WDR | NBR | A | 36 | 56 | 10 | 340,92 |
| 18704 | 185595 | WDR | NBR | AS | 36 | 58 | 10 | 197,86 |
| 38638 | | WDR | NBR | AS | 36 | 58 | 12 | 197,86 |
| 17468 | | WDR | NBR | A | 36 | 62 | 7 | 238,02 |
| 185743 | | WDR | NBR | AS | 36 | 62 | 7 | 249,96 |
| 187754 | | WDR | NBR | A | 36 | 62 | 9 | 471,08 |
| 36571 | | WDR | NBR | C | 36 | 62 | 9 | 550,43 |
| 38733 | | WDR | NBR | C | 36 | 62 | 10 | 550,43 |
| 17470 | 185358 | WDR | NBR | A | 36 | 68 | 10 | 252,90 |
| 175592 | 186348 | WDR | NBR | AS | 36 | 68 | 10 | 265,54 |
| 19864 | | WDR | NBR | A | 36 | 75 | 12 | 339,68 |
| 34925 | 185070 | WDR | NBR | AS | 36,51 | 50,8 | 7,93 | 354,06 |
| 59837 | 186269 | WDR | NBR | AS | 36,51 | 52,38 | 7,93 | 354,06 |
| 44208 | | WDR | NBR | AS | 36,51 | 52,58 | 7,93 | 354,06 |
| 20068 | | WDR | NBR | A | 36,51 | 57,15 | 9,52 | 381,40 |
| 20069 | 185955 | WDR | NBR | A | 36,51 | 63,5 | 12,7 | 399,19 |

| CODICE | NUOVO CODICE | TIPO | MAT. | SPEC. | d1 mm | d2 mm | b mm | LISTINO 5-2016 X 100 € |
|---|---|---|---|---|---|---|---|---|
| 22085 | | WDR | NBR | AO | 37 | 47 | 4 | 232,33 |
| 83239 | 186324 | WDR | NBR | A | 37 | 52 | 7 | 197,86 |
| 39496 | | WDR | NBR | A | 37 | 52 | 8 | 229,35 |
| 40381 | | WDR | NBR | C | 37 | 58 | 13 | 521,98 |
| 17473 | | WDR | NBR | A | 37 | 62 | 8 | 262,82 |
| 40382 | 186204 | WDR | NBR | C | 37 | 62 | 9 | 550,43 |
| 187755 | | WDR | NBR | A | 37 | 62 | 10 | 471,08 |
| 187760 | | WDR | NBR | A | 37 | 80 | 13 | 610,11 |
| 17475 | | WDR | NBR | C | 37 | 80 | 13 | 728,95 |
| 35385 | | WDR | NBR | BO | 38 | 43 | 3 | 267,43 |
| 22086 | | WDR | NBR | AO | 38 | 48 | 4 | 232,33 |
| 77850 | 186317 | WDR | NBR | AS | 38 | 48 | 6 | 186,14 |
| 17327 | | WDR | NBR | A | 38 | 48 | 8 | 232,35 |
| 17476 | 185359 | WDR | NBR | A | 38 | 50 | 7 | 171,82 |
| 175591 | | WDR | NBR | AS | 38 | 50 | 7 | 180,94 |
| 19750 | | WDR | NBR | B | 38 | 50 | 7 | 257,74 |
| 175593 | 186349 | WDR | NBR | AS | 38 | 52 | 7 | 186,14 |
| 27462 | | WDR | NBR | A | 38 | 52 | 7 | 177,03 |
| 19722 | | WDR | NBR | B | 38 | 52 | 7 | 286,37 |
| 17478 | | WDR | NBR | BS | 38 | 52 | 7 | 300,69 |
| 17479 | 196739 | WDR | NBR | A | 38 | 52 | 8 | 177,03 |
| 39506 | 186162 | WDR | NBR | AS | 38 | 52 | 8 | 186,14 |
| 38650 | 186091 | WDR | NBR | B | 38 | 52 | 8 | 286,37 |
| 17480 | 184956 | WDR | NBR | A | 38 | 52 | 10 | 177,03 |
| 39509 | | WDR | NBR | AS | 38 | 52 | 10 | 227,28 |
| 17481 | | WDR | NBR | B | 38 | 52 | 10 | 286,37 |
| 17482 | | WDR | NBR | C | 38 | 52 | 10 | 424,35 |
| 17483 | | WDR | NBR | A | 38 | 54 | 10 | 177,03 |
| 185101 | | WDR | NBR | AS | 38 | 54 | 10 | 185,88 |
| 17484 | | WDR | NBR | B | 38 | 54 | 10 | 286,37 |
| 19121 | 185747 | WDR | NBR | A | 38 | 55 | 7 | 177,03 |
| 39512 | 186163 | WDR | NBR | AS | 38 | 55 | 7 | 186,14 |
| 17487 | | WDR | NBR | B | 38 | 55 | 7 | 286,37 |
| 17488 | | WDR | NBR | C | 38 | 55 | 9 | 424,35 |
| 17489 | 185361 | WDR | NBR | AS | 38 | 55 | 10 | 186,14 |
| 19751 | | WDR | NBR | C | 38 | 55 | 10 | 424,35 |
| 19724 | | WDR | NBR | C | 38 | 55 | 12 | 424,35 |
| 17490 | 185362 | WDR | NBR | A | 38 | 56 | 10 | 188,75 |
| 44284 | | WDR | NBR | B | 38 | 56 | 10 | 315,01 |
| 17491 | | WDR | NBR | C | 38 | 56 | 10 | 521,98 |
| 17492 | | WDR | NBR | C | 38 | 56 | 12 | 521,98 |
| 19125 | 185748 | WDR | NBR | AS | 38 | 58 | 7 | 197,86 |
| 44224 | 186224 | WDR | NBR | A | 38 | 58 | 10 | 205,67 |
| 44285 | | WDR | NBR | B | 38 | 58 | 10 | 315,01 |
| 40286 | | WDR | NBR | BS | 38 | 58 | 11 | 330,63 |
| 17493 | | WDR | NBR | C | 38 | 58 | 12 | 521,98 |
| 17494 | 185363 | WDR | NBR | A | 38 | 60 | 10 | 202,07 |
| 17495 | 185364 | WDR | NBR | C | 38 | 60 | 10 | 497,12 |
| | 185024 | WDR | NBR | A | 38 | 62 | 7 | 197,11 |

| CODICE | NUOVO CODICE | TIPO | MAT. | SPEC. | d1 mm | d2 mm | b mm | LISTINO 5-2016 X 100 € |
|---|---|---|---|---|---|---|---|---|
| 38469 | 186081 | WDR | NBR | AS | 38 | 62 | 7 | 207,03 |
| 19726 | | WDR | NBR | B | 38 | 62 | 7 | 328,52 |
| 39523 | | WDR | NBR | AS | 38 | 62 | 8 | 296,66 |
| 17496 | 185365 | WDR | NBR | A | 38 | 62 | 10 | 197,11 |
| 39525 | | WDR | NBR | AS | 38 | 62 | 10 | 270,68 |
| 17497 | | WDR | NBR | BS | 38 | 62 | 10 | 344,64 |
| 17498 | | WDR | NBR | C | 38 | 62 | 10 | 550,43 |
| 27001 | | WDR | NBR | B | 38 | 62 | 12 | 328,52 |
| 17500 | | WDR | NBR | C | 38 | 62 | 12 | 550,43 |
| 17501 | | WDR | NBR | A | 38 | 65 | 10 | 373,72 |
| 17502 | | WDR | NBR | C | 38 | 65 | 10 | 550,43 |
| 17503 | | WDR | NBR | B | 38 | 70 | 10 | 364,48 |
| 17504 | | WDR | NBR | C | 38 | 70 | 10 | 609,94 |
| 39532 | | WDR | NBR | AS | 38 | 72 | 10 | 273,98 |
| 17508 | | WDR | NBR | C | 38 | 72 | 10 | 663,25 |
| 17509 | | WDR | NBR | B | 38 | 72 | 12 | 394,23 |
| 17510 | | WDR | NBR | C | 38 | 72 | 12 | 663,25 |
| 72816 | | WDR | NBR | A | 38 | 80 | 10 | 368,33 |
| 20070 | | WDR | NBR | A | 38,1 | 47,62 | 9,52 | 299,39 |
| 19927 | 185904 | WDR | NBR | A | 38,1 | 50,8 | 6,35 | 337,14 |
| 20071 | 185956 | WDR | NBR | A | 38,1 | 50,8 | 12,7 | 337,14 |
| 19929 | 185905 | WDR | NBR | A | 38,1 | 52,38 | 6,35 | 337,14 |
| 19930 | | WDR | NBR | A | 38,1 | 52,38 | 7,93 | 337,14 |
| 20072 | 185957 | WDR | NBR | A | 38,1 | 52,38 | 9,52 | 337,14 |
| 20073 | | WDR | NBR | A | 38,1 | 53,97 | 9,52 | 337,14 |
| 79893 | | WDR | NBR | B | 38,1 | 54,96 | 7,14 | 286,37 |
| 20074 | | WDR | NBR | A | 38,1 | 55,56 | 7,93 | 381,40 |
| 19934 | 185907 | WDR | NBR | A | 38,1 | 55,56 | 9,52 | 381,40 |
| 59697 | 186256 | WDR | NBR | A | 38,1 | 57,15 | 6,35 | 381,40 |
| 20075 | 185958 | WDR | NBR | A | 38,1 | 57,15 | 7,93 | 381,40 |
| 19939 | 185909 | WDR | NBR | A | 38,1 | 57,15 | 9,52 | 381,40 |
| 59842 | | WDR | NBR | AS | 38,1 | 57,15 | 9,52 | 400,92 |
| 19940 | | WDR | NBR | A | 38,1 | 57,15 | 12,7 | 381,40 |
| 19993 | | WDR | NBR | A | 38,1 | 60,32 | 9,52 | 399,19 |
| 59843 | | WDR | NBR | AS | 38,1 | 60,32 | 9,52 | 419,02 |
| 59698 | | WDR | NBR | A | 38,1 | 60,32 | 11,11 | 399,19 |
| 20076 | | WDR | NBR | A | 38,1 | 60,32 | 12,7 | 399,19 |
| 20837 | | WDR | NBR | A | 38,1 | 61,91 | 9,52 | 399,19 |
| 20077 | | WDR | NBR | A | 38,1 | 63,5 | 6,35 | 399,19 |
| 19947 | 185911 | WDR | NBR | A | 38,1 | 63,5 | 7,93 | 399,19 |
| 20078 | 185959 | WDR | NBR | A | 38,1 | 63,5 | 9,52 | 399,19 |
| 19948 | 185912 | WDR | NBR | A | 38,1 | 63,5 | 12,7 | 399,19 |
| 59845 | | WDR | NBR | AS | 38,1 | 66,67 | 9,52 | 452,50 |
| 20079 | | WDR | NBR | A | 38,1 | 66,67 | 12,7 | 431,42 |
| 59846 | 186271 | WDR | NBR | AS | 38,1 | 69,85 | 9,52 | 452,50 |
| 20841 | | WDR | NBR | A | 38,1 | 69,85 | 12,7 | 431,42 |
| 59847 | | WDR | NBR | AS | 38,1 | 69,85 | 12,7 | 452,50 |
| 185876 | | WDR | NBR | AS | 39 | 52 | 10 | 267,38 |
| 19943 | | WDR | NBR | A | 39,68 | 60,32 | 9,52 | 399,19 |

| CODICE | NUOVO CODICE | TIPO | MAT. | SPEC. | d1 mm | d2 mm | b mm | LISTINO 5-2016 X 100 € |
|---|---|---|---|---|---|---|---|---|
| 24674 | | WDR | NBR | A | 39,68 | 62,5 | 12,7 | 399,19 |
| 20080 | | WDR | NBR | A | 39,68 | 63,5 | 7,93 | 399,19 |
| 59851 | | WDR | NBR | AS | 39,68 | 63,5 | 12,7 | 419,02 |
| 36462 | 186067 | WDR | NBR | A | 39,68 | 68,26 | 9,52 | 431,42 |
| 117747 | | WDR | NBR | AS | 39,68 | 68,26 | 9,52 | 452,50 |
| 22087 | | WDR | NBR | AO | 40 | 47 | 4 | 232,33 |
| 46418 | | WDR | NBR | AO | 40 | 47 | 5 | 232,33 |
| 34469 | | WDR | NBR | BO | 40 | 48 | 4 | 300,11 |
| 22088 | | WDR | NBR | AO | 40 | 50 | 4 | 232,33 |
| 19134 | 185750 | WDR | NBR | A | 40 | 50 | 7 | 171,82 |
| 19135 | | WDR | NBR | AS | 40 | 50 | 7 | 180,94 |
| 17512 | 185368 | WDR | NBR | A | 40 | 50 | 8 | 171,83 |
| 186025 | | WDR | NBR | A | 40 | 52 | 5 | 175,20 |
| 22089 | | WDR | NBR | AO | 40 | 52 | 5 | 254,12 |
| 185369 | | WDR | NBR | A | 40 | 52 | 6 | 177,03 |
| 17515 | | WDR | NBR | AS | 40 | 52 | 7 | 186,14 |
| 17514 | | WDR | NBR | A | 40 | 52 | 7 | 177,03 |
| 184957 | | WDR | NBR | B | 40 | 52 | 7 | 203,92 |
| 19138 | | WDR | NBR | BS | 40 | 52 | 7 | 300,69 |
| 185752 | | WDR | NBR | A | 40 | 52 | 8 | 200,64 |
| 19141 | | WDR | NBR | B | 40 | 52 | 8 | 286,37 |
| 130958 | | WDR | NBR | AS | 40 | 52 | 8,5 | 186,14 |
| 17518 | | WDR | NBR | A | 40 | 52 | 10 | 229,35 |
| 186167 | | WDR | NBR | AS | 40 | 52 | 10 | 186,14 |
| 40491 | | WDR | NBR | AO | 40 | 54 | 5 | 254,12 |
| 19142 | | WDR | NBR | BS | 40 | 54 | 5,5 | 300,69 |
| 40298 | | WDR | NBR | BS | 40 | 54 | 7 | 300,69 |
| 36815 | | WDR | NBR | ASY | 40 | 55 | 6 | 361,87 |
| 17520 | 185370 | WDR | NBR | A | 40 | 55 | 7 | 177,03 |
| 17521 | | WDR | NBR | AS | 40 | 55 | 7 | 186,14 |
| 17522 | | WDR | NBR | B | 40 | 55 | 7 | 286,37 |
| 116375 | | WDR | NBR | ASY | 40 | 55 | 7 | 382,70 |
| 17523 | 185371 | WDR | NBR | A | 40 | 55 | 8 | 177,03 |
| 17524 | | WDR | NBR | AS | 40 | 55 | 8 | 186,14 |
| 17525 | | WDR | NBR | B | 40 | 55 | 8 | 286,37 |
| 40301 | | WDR | NBR | BS | 40 | 55 | 8 | 300,69 |
| 19143 | | WDR | NBR | BS | 40 | 55 | 9 | 300,69 |
| 17526 | | WDR | NBR | C | 40 | 55 | 9 | 424,35 |
| 17527 | 185372 | WDR | NBR | A | 40 | 55 | 10 | 177,03 |
| 196058 | | WDR | NBR | AS | 40 | 55 | 10 | 185,88 |
| 17529 | | WDR | NBR | C | 40 | 55 | 10 | 424,35 |
| 187749 | | WDR | NBR | A | 40 | 55 | 12 | 286,38 |
| 24431 | 186028 | WDR | NBR | B | 40 | 55 | 12 | 286,37 |
| 19729 | | WDR | NBR | C | 40 | 55 | 12 | 424,35 |
| 19145 | 185755 | WDR | NBR | AS | 40 | 56 | 7 | 188,75 |
| 17530 | | WDR | NBR | B | 40 | 56 | 7 | 315,01 |
| 17531 | | WDR | NBR | A | 40 | 56 | 8 | 188,75 |
| 39555 | 186169 | WDR | NBR | AS | 40 | 56 | 8 | 197,86 |
| 95575 | | WDR | NBR | B | 40 | 56 | 9 | 315,01 |

| CODICE | NUOVO CODICE | TIPO | MAT. | SPEC. | d1 mm | d2 mm | b mm | LISTINO 5-2016 X 100 € |
|---|---|---|---|---|---|---|---|---|
| 17533 | | WDR | NBR | A | 40 | 56 | 10 | 200,46 |
| 39556 | 186170 | WDR | NBR | AS | 40 | 56 | 10 | 197,86 |
| 17534 | | WDR | NBR | B | 40 | 56 | 10 | 315,01 |
| 17535 | | WDR | NBR | C | 40 | 56 | 10 | 521,98 |
| 17536 | 185374 | WDR | NBR | A | 40 | 56 | 12 | 200,46 |
| 17537 | | WDR | NBR | C | 40 | 56 | 12 | 521,98 |
| 19147 | | WDR | NBR | B | 40 | 57,15 | 10 | 315,01 |
| 195966 | | WDR | NBR | A | 40 | 58 | 8 | 300,23 |
| 185757 | | WDR | NBR | AS | 40 | 58 | 8 | 316,06 |
| 39559 | 186172 | WDR | NBR | AS | 40 | 58 | 9 | 230,91 |
| 17538 | | WDR | NBR | B | 40 | 58 | 9 | 315,01 |
| 19752 | | WDR | NBR | C | 40 | 58 | 9 | 521,98 |
| 19151 | 185759 | WDR | NBR | A | 40 | 58 | 10 | 188,75 |
| 18705 | 185596 | WDR | NBR | AS | 40 | 58 | 10 | 197,86 |
| 17540 | | WDR | NBR | C | 40 | 58 | 10 | 521,98 |
| 17545 | | WDR | NBR | A | 40 | 60 | 7 | 185,96 |
| 39560 | 186173 | WDR | NBR | AS | 40 | 60 | 7 | 188,44 |
| 19153 | 185025 | WDR | NBR | A | 40 | 60 | 8 | 219,01 |
| 37770 | | WDR | NBR | AS | 40 | 60 | 8 | 224,18 |
| 17546 | 185376 | WDR | NBR | A | 40 | 60 | 10 | 179,76 |
| 19154 | 185760 | WDR | NBR | AS | 40 | 60 | 10 | 188,44 |
| 38685 | 186092 | WDR | NBR | BS | 40 | 60 | 10 | 314,89 |
| 17548 | | WDR | NBR | C | 40 | 60 | 10 | 497,12 |
| 17549 | 185378 | WDR | NBR | C | 40 | 60 | 12 | 497,12 |
| 78452 | 190654 | WDR | NBR | ASY | 40 | 62 | 6 | 376,87 |
| 17550 | | WDR | NBR | A | 40 | 62 | 7 | 197,11 |
| 39562 | | WDR | NBR | AS | 40 | 62 | 7 | 206,97 |
| 19730 | 185866 | WDR | NBR | B | 40 | 62 | 7 | 328,52 |
| 18640 | | WDR | NBR | BS | 40 | 62 | 7 | 357,04 |
| 19157 | 185026 | WDR | NBR | AS | 40 | 62 | 8 | 207,03 |
| 44268 | 186231 | WDR | NBR | A | 40 | 62 | 8 | 197,11 |
| 17551 | | WDR | NBR | C | 40 | 62 | 8 | 550,43 |
| 17552 | | WDR | NBR | C | 40 | 62 | 9 | 550,43 |
| 17553 | | WDR | NBR | A | 40 | 62 | 10 | 197,11 |
| 17554 | | WDR | NBR | AS | 40 | 62 | 10 | 207,03 |
| 17555 | | WDR | NBR | B | 40 | 62 | 10 | 328,52 |
| 39355 | | WDR | NBR | BS | 40 | 62 | 10 | 344,64 |
| 17556 | 185379 | WDR | NBR | C | 40 | 62 | 10 | 550,43 |
| 17557 | | WDR | NBR | CS | 40 | 62 | 10 | 577,71 |
| 19161 | | WDR | NBR | AS | 40 | 62 | 12 | 188,39 |
| 17560 | | WDR | NBR | B | 40 | 62 | 12 | 328,52 |
| 17561 | | WDR | NBR | C | 40 | 62 | 12 | 550,43 |
| 38440 | | WDR | NBR | A | 40 | 63 | 10 | 197,11 |
| 17562 | | WDR | NBR | B | 40 | 65 | 9 | 328,52 |
| 17564 | 184958 | WDR | NBR | AS | 40 | 65 | 10 | 207,03 |
| 17563 | 185381 | WDR | NBR | A | 40 | 65 | 10 | 197,11 |
| 17565 | | WDR | NBR | B | 40 | 65 | 10 | 328,52 |
| 17566 | | WDR | NBR | C | 40 | 65 | 10 | 550,43 |
| 61343 | | WDR | NBR | CS | 40 | 65 | 10 | 577,71 |

| CODICE | NUOVO CODICE | TIPO | MAT. | SPEC. | d1 mm | d2 mm | b mm | LISTINO 5-2016 X 100 € |
|---|---|---|---|---|---|---|---|---|
| 17568 | | WDR | NBR | B | 40 | 65 | 12 | 328,52 |
| 17570 | | WDR | NBR | C | 40 | 65 | 12 | 550,43 |
| 17571 | | WDR | NBR | CS | 40 | 65 | 12 | 577,71 |
| 186174 | | WDR | NBR | A | 40 | 68 | 7 | 294,67 |
| 17572 | 185383 | WDR | NBR | B | 40 | 68 | 7 | 364,48 |
| 83420 | 186325 | WDR | NBR | A | 40 | 68 | 8 | 322,33 |
| 39255 | 186148 | WDR | NBR | AS | 40 | 68 | 10 | 247,94 |
| 15573 | | WDR | NBR | A | 40 | 68 | 10 | 235,55 |
| 38652 | | WDR | NBR | B | 40 | 68 | 10 | 364,48 |
| 17574 | | WDR | NBR | C | 40 | 68 | 10 | 609,94 |
| 17576 | | WDR | NBR | C | 40 | 68 | 12 | 609,94 |
| 17577 | 185384 | WDR | NBR | A | 40 | 70 | 10 | 262,82 |
| 186063 | 186063 | WDR | NBR | AS | 40 | 70 | 10 | 275,95 |
| 39570 | | WDR | NBR | AS | 40 | 72 | 7 | 273,98 |
| 17581 | 185385 | WDR | NBR | A | 40 | 72 | 7 | 260,34 |
| 17582 | | WDR | NBR | B | 40 | 72 | 7 | 394,23 |
| 17585 | 184960 | WDR | NBR | A | 40 | 72 | 10 | 262,82 |
| 19168 | 185766 | WDR | NBR | AS | 40 | 72 | 10 | 273,98 |
| 17586 | | WDR | NBR | B | 40 | 72 | 10 | 394,23 |
| 17588 | | WDR | NBR | B | 40 | 72 | 12 | 394,23 |
| 17589 | | WDR | NBR | C | 40 | 72 | 12 | 663,25 |
| 25723 | | WDR | NBR | C | 40 | 78 | 10 | 728,95 |
| 40845 | 185105 | WDR | NBR | AS | 40 | 80 | 7 | 285,13 |
| 19170 | | WDR | NBR | A | 40 | 80 | 8 | 330,10 |
| 17590 | | WDR | NBR | A | 40 | 80 | 10 | 271,50 |
| 26199 | | WDR | NBR | AS | 40 | 80 | 10 | 285,13 |
| 17591 | | WDR | NBR | B | 40 | 80 | 10 | 425,22 |
| 17592 | | WDR | NBR | BS | 40 | 80 | 10 | 483,49 |
| 17593 | | WDR | NBR | C | 40 | 80 | 10 | 728,95 |
| 17594 | 185387 | WDR | NBR | AS | 40 | 80 | 12 | 285,13 |
| 17598 | | WDR | NBR | C | 40 | 80 | 13 | 728,95 |
| 38750 | | WDR | NBR | CS | 40 | 80 | 13 | 728,95 |
| 19171 | 185768 | WDR | NBR | A | 40 | 85 | 10 | 297,53 |
| 122333 | | WDR | NBR | AS | 40 | 85 | 10 | 395,67 |
| 38731 | | WDR | NBR | C | 40 | 85 | 10 | 782,26 |
| 69820 | | WDR | NBR | A | 40 | 90 | 8 | 354,56 |
| 127628 | | WDR | NBR | AS | 40 | 90 | 8 | 420,36 |
| 36995 | 186072 | WDR | NBR | A | 40 | 90 | 10 | 322,33 |
| 39592 | 185103 | WDR | NBR | AS | 40 | 90 | 10 | 338,44 |
| 39593 | | WDR | NBR | A | 40 | 90 | 12 | 322,33 |
| 39594 | 186175 | WDR | NBR | AS | 40 | 90 | 12 | 338,44 |
| 17599 | | WDR | NBR | B | 40 | 90 | 12 | 494,65 |
| 17600 | | WDR | NBR | C | 40 | 90 | 12 | 828,13 |
| 17601 | | WDR | NBR | C | 40 | 90 | 13 | 828,13 |
| 122036 | | WDR | NBR | AS | 40 | 110 | 10 | 761,94 |
| 18497 | | WDR | NBR | BS | 41 | 53 | 7 | 300,69 |
| 20083 | 185053 | WDR | NBR | A | 41,27 | 55,56 | 9,52 | 381,40 |
| 20084 | 185961 | WDR | NBR | A | 41,27 | 57,15 | 9,52 | 381,40 |
| 59854 | | WDR | NBR | AS | 41,27 | 57,15 | 9,52 | 400,92 |

| CODICE | NUOVO CODICE | TIPO | MAT. | SPEC. | d1 mm | d2 mm | b mm | LISTINO 5-2016 X 100 € |
|---|---|---|---|---|---|---|---|---|
| 19944 | | WDR | NBR | A | 41,27 | 60,32 | 7,93 | 399,19 |
| 20085 | 185962 | WDR | NBR | A | 41,27 | 60,32 | 9,52 | 399,19 |
| 21956 | 186022 | WDR | NBR | AS | 41,27 | 60,32 | 9,52 | 419,02 |
| 20086 | 185963 | WDR | NBR | A | 41,27 | 60,32 | 12,7 | 399,19 |
| 26431 | | WDR | NBR | B | 41,27 | 61,91 | 9,52 | 328,52 |
| 20246 | | WDR | NBR | A | 41,27 | 61,91 | 12,7 | 399,19 |
| 20087 | | WDR | NBR | A | 41,27 | 63,5 | 7,93 | 399,19 |
| 20088 | | WDR | NBR | A | 41,27 | 63,5 | 9,52 | 399,19 |
| 59855 | | WDR | NBR | AS | 41,27 | 63,5 | 9,52 | 419,02 |
| 19949 | | WDR | NBR | A | 41,27 | 63,5 | 12,7 | 399,19 |
| 59508 | | WDR | NBR | AS | 41,27 | 63,5 | 12,7 | 419,02 |
| 20838 | | WDR | NBR | A | 41,27 | 65,08 | 9,52 | 431,42 |
| 20089 | | WDR | NBR | A | 41,27 | 66,67 | 9,52 | 431,42 |
| 59856 | | WDR | NBR | AS | 41,27 | 66,67 | 9,52 | 452,50 |
| 20090 | | WDR | NBR | A | 41,27 | 66,67 | 12,7 | 431,42 |
| 20091 | 185964 | WDR | NBR | A | 41,27 | 69,85 | 9,52 | 431,42 |
| 20092 | | WDR | NBR | A | 41,27 | 69,85 | 12,7 | 431,42 |
| 20842 | | WDR | NBR | A | 41,27 | 73,02 | 12,7 | 476,05 |
| 19801 | | WDR | NBR | A | 42 | 50 | 7 | 331,71 |
| 19180 | | WDR | NBR | AS | 42 | 52 | 4 | 186,14 |
| 22090 | | WDR | NBR | AO | 42 | 52 | 4 | 254,12 |
| 186333 | | WDR | NBR | A | 42 | 52 | 5 | 177,28 |
| 19181 | | WDR | NBR | AS | 42 | 52 | 8 | 242,29 |
| 81261 | | WDR | NBR | AO | 42 | 52 | 5,5 | 254,12 |
| 17604 | 185389 | WDR | NBR | A | 42 | 55 | 7 | 177,03 |
| 185027 | | WDR | NBR | AS | 42 | 55 | 7 | 193,22 |
| 40313 | 186203 | WDR | NBR | BS | 42 | 55 | 7 | 300,69 |
| 185391 | | WDR | NBR | A | 42 | 55 | 8 | 177,04 |
| 19183 | 185028 | WDR | NBR | AS | 42 | 55 | 8 | 186,14 |
| 38062 | 186076 | WDR | NBR | B | 42 | 55 | 8 | 286,37 |
| 18641 | | WDR | NBR | BS | 42 | 55 | 9 | 300,69 |
| 19186 | | WDR | NBR | AS | 42 | 55 | 10 | 186,14 |
| 17607 | 185392 | WDR | NBR | A | 42 | 56 | 7 | 188,75 |
| 34869 | | WDR | NBR | AS | 42 | 56 | 7 | 197,86 |
| 17608 | | WDR | NBR | B | 42 | 56 | 7 | 315,01 |
| 19189 | | WDR | NBR | BS | 42 | 56 | 7 | 330,63 |
| 19194 | 185770 | WDR | NBR | AS | 42 | 58 | 7 | 258,75 |
| 19195 | 185771 | WDR | NBR | B | 42 | 58 | 7 | 315,01 |
| 17609 | | WDR | NBR | BS | 42 | 58 | 7 | 330,63 |
| 19196 | | WDR | NBR | AS | 42 | 58 | 7 | 312,84 |
| 17610 | | WDR | NBR | B | 42 | 58 | 9 | 315,01 |
| 17611 | | WDR | NBR | A | 42 | 58 | 10 | 188,75 |
| 17612 | | WDR | NBR | B | 42 | 58 | 10 | 315,01 |
| 17614 | 185393 | WDR | NBR | A | 42 | 60 | 10 | 185,96 |
| 19202 | 185773 | WDR | NBR | AS | 42 | 60 | 10 | 188,44 |
| 17615 | | WDR | NBR | B | 42 | 60 | 10 | 300,01 |
| 17616 | | WDR | NBR | C | 42 | 60 | 10 | 497,12 |
| 17617 | | WDR | NBR | C | 42 | 60 | 12 | 497,12 |
| 21584 | | WDR | NBR | A | 42 | 62 | 7 | 197,11 |

| CODICE | NUOVO CODICE | TIPO | MAT. | SPEC. | d1 mm | d2 mm | b mm | LISTINO 5-2016 X 100 € |
|---|---|---|---|---|---|---|---|---|
| 174574 | | WDR | NBR | AS | 42 | 62 | 7 | 207,03 |
| 17619 | 185394 | WDR | NBR | B | 42 | 62 | 7 | 328,52 |
| 17620 | | WDR | NBR | BS | 42 | 62 | 7 | 344,64 |
| 38639 | | WDR | NBR | AS | 42 | 62 | 8 | 207,03 |
| 19203 | 185774 | WDR | NBR | A | 42 | 62 | 8 | 197,11 |
| 40316 | | WDR | NBR | B | 42 | 62 | 8 | 328,52 |
| 19204 | 185775 | WDR | NBR | AS | 42 | 62 | 10 | 207,03 |
| 17621 | 184961 | WDR | NBR | A | 42 | 62 | 10 | 197,11 |
| 17622 | 185395 | WDR | NBR | B | 42 | 62 | 10 | 328,52 |
| 185396 | 185396 | WDR | NBR | C | 42 | 62 | 10 | 550,43 |
| 17625 | | WDR | NBR | B | 42 | 62 | 12 | 328,52 |
| 17626 | | WDR | NBR | C | 42 | 62 | 12 | 550,43 |
| 17627 | 185398 | WDR | NBR | A | 42 | 65 | 10 | 197,11 |
| 39182 | | WDR | NBR | AS | 42 | 65 | 10 | 207,03 |
| 17628 | | WDR | NBR | B | 42 | 65 | 10 | 365,72 |
| 17629 | | WDR | NBR | C | 42 | 65 | 10 | 550,43 |
| 17630 | | WDR | NBR | A | 42 | 65 | 12 | 442,06 |
| 17632 | | WDR | NBR | C | 42 | 65 | 12 | 550,43 |
| 41745 | | WDR | NBR | B | 42 | 67 | 10 | 389,27 |
| 185778 | | WDR | NBR | A | 42 | 70 | 10 | 423,13 |
| 17636 | | WDR | NBR | C | 42 | 70 | 10 | 609,94 |
| 38730 | | WDR | NBR | C | 42 | 70 | 12 | 609,94 |
| 39615 | 186176 | WDR | NBR | AS | 42 | 72 | 8 | 273,98 |
| 19210 | 185779 | WDR | NBR | A | 42 | 72 | 8 | 262,82 |
| 17638 | 185400 | WDR | NBR | A | 42 | 72 | 10 | 262,82 |
| 19211 | 185780 | WDR | NBR | AS | 42 | 72 | 10 | 275,95 |
| 17640 | | WDR | NBR | C | 42 | 72 | 10 | 663,25 |
| 17641 | | WDR | NBR | B | 42 | 72 | 12 | 394,23 |
| 17642 | | WDR | NBR | C | 42 | 72 | 12 | 663,25 |
| 39618 | | WDR | NBR | AS | 42 | 75 | 10 | 397,65 |
| 17643 | | WDR | NBR | A | 42 | 80 | 10 | 394,93 |
| 17645 | | WDR | NBR | C | 42 | 80 | 13 | 728,95 |
| 21522 | 186016 | WDR | NBR | A | 42,86 | 57,15 | 7,93 | 381,40 |
| 20093 | | WDR | NBR | A | 42,86 | 63,5 | 9,52 | 399,19 |
| 19950 | 185913 | WDR | NBR | A | 42,86 | 63,5 | 12,7 | 399,19 |
| 20247 | | WDR | NBR | A | 42,86 | 68,26 | 12,7 | 431,42 |
| 107898 | | WDR | NBR | BS | 42,86 | 69,85 | 9,52 | 383,07 |
| 22091 | | WDR | NBR | AO | 43 | 53 | 4 | 254,12 |
| 55936 | | WDR | NBR | BS | 43 | 54 | 7,5 | 300,69 |
| 72615 | | WDR | NBR | A | 43 | 60 | 10 | 179,76 |
| 38633 | | WDR | NBR | A | 43 | 75 | 10 | 297,53 |
| 35471 | | WDR | NBR | B | 44 | 58 | 7 | 341,04 |
| 17651 | 184962 | WDR | NBR | A | 44 | 60 | 10 | 179,76 |
| 38729 | | WDR | NBR | C | 44 | 60 | 10 | 497,12 |
| 185783 | | WDR | NBR | A | 44 | 62 | 10 | 255,30 |
| 17652 | 185402 | WDR | NBR | AS | 44 | 62 | 10 | 207,03 |
| 17653 | | WDR | NBR | C | 44 | 62 | 12 | 550,43 |
| 81249 | | WDR | NBR | AS | 44 | 64 | 9 | 446,95 |
| 17654 | | WDR | NBR | A | 44 | 65 | 10 | 292,57 |

| CODICE | NUOVO CODICE | TIPO | MAT. | SPEC. | d1 mm | d2 mm | b mm | LISTINO 5-2016 X 100 € |
|---|---|---|---|---|---|---|---|---|
| 38728 | | WDR | NBR | C | 44 | 70 | 12 | 609,94 |
| 25724 | | WDR | NBR | C | 44 | 72 | 12 | 663,25 |
| 19933 | | WDR | NBR | A | 44,45 | 53,97 | 4,76 | 337,14 |
| 20094 | 185965 | WDR | NBR | A | 44,45 | 57,15 | 7,93 | 381,40 |
| 19941 | 185910 | WDR | NBR | A | 44,45 | 57,15 | 9,52 | 381,40 |
| 59859 | | WDR | NBR | AS | 44,45 | 57,15 | 9,52 | 400,92 |
| 19942 | | WDR | NBR | A | 44,45 | 58,73 | 6,35 | 381,40 |
| 59860 | | WDR | NBR | AS | 44,45 | 58,73 | 6,35 | 400,92 |
| 19945 | | WDR | NBR | A | 44,45 | 60,32 | 7,93 | 399,19 |
| 20096 | 185966 | WDR | NBR | A | 44,45 | 60,32 | 9,52 | 399,19 |
| 20097 | | WDR | NBR | A | 44,45 | 60,32 | 12,7 | 399,19 |
| 35512 | | WDR | NBR | AS | 44,45 | 60,53 | 9,52 | 419,02 |
| 20836 | 186012 | WDR | NBR | A | 44,45 | 61,91 | 7,93 | 399,19 |
| 26430 | | WDR | NBR | B | 44,45 | 61,91 | 9,52 | 365,72 |
| 19951 | | WDR | NBR | A | 44,45 | 63,5 | 7,93 | 399,19 |
| 59861 | | WDR | NBR | AS | 44,45 | 63,5 | 7,93 | 419,02 |
| 19986 | | WDR | NBR | A | 44,45 | 63,5 | 9,52 | 399,19 |
| 36776 | | WDR | NBR | CS | 44,45 | 63,5 | 12,7 | 577,71 |
| 19952 | | WDR | NBR | A | 44,45 | 63,5 | 12,7 | 399,19 |
| 117748 | | WDR | NBR | AS | 44,45 | 63,5 | 12,7 | 419,02 |
| 74038 | | WDR | NBR | A | 44,45 | 65,08 | 7,93 | 431,42 |
| 20098 | | WDR | NBR | A | 44,45 | 66,67 | 9,52 | 431,42 |
| 59863 | | WDR | NBR | AS | 44,45 | 66,67 | 9,52 | 452,50 |
| 20099 | 185967 | WDR | NBR | A | 44,45 | 66,67 | 12,7 | 431,42 |
| 59705 | | WDR | NBR | A | 44,45 | 68,26 | 11,11 | 431,42 |
| 35072 | | WDR | NBR | A | 44,45 | 68,26 | 12,7 | 431,42 |
| 72738 | | WDR | NBR | A | 44,45 | 69,1 | 12,7 | 431,42 |
| 19957 | 185914 | WDR | NBR | A | 44,45 | 69,85 | 9,52 | 431,42 |
| 22180 | | WDR | NBR | AS | 44,45 | 69,85 | 9,52 | 452,50 |
| 20100 | 185968 | WDR | NBR | A | 44,45 | 69,85 | 12,7 | 431,42 |
| 59864 | 186273 | WDR | NBR | AS | 44,45 | 69,85 | 12,7 | 452,50 |
| 76506 | 186316 | WDR | NBR | BS | 44,45 | 70,15 | 9,52 | 414,06 |
| 20101 | 185054 | WDR | NBR | A | 44,45 | 73,02 | 9,52 | 476,05 |
| 59865 | | WDR | NBR | AS | 44,45 | 73,02 | 9,52 | 499,60 |
| 20103 | | WDR | NBR | A | 44,45 | 76,2 | 9,52 | 513,24 |
| 59866 | | WDR | NBR | AS | 44,45 | 76,2 | 9,52 | 539,27 |
| 20816 | 186009 | WDR | NBR | A | 44,45 | 80,96 | 12,7 | 513,24 |
| 19609 | | WDR | NBR | A | 44,5 | 62 | 10 | 396,03 |
| 19779 | | WDR | NBR | BO | 45 | 50 | 3 | 300,11 |
| 22092 | | WDR | NBR | AO | 45 | 52 | 4 | 254,12 |
| 19232 | | WDR | NBR | A | 45 | 52 | 8 | 254,38 |
| 38441 | | WDR | NBR | A | 45 | 55 | 7 | 177,03 |
| 186311 | | WDR | NBR | AS | 45 | 55 | 7 | 219,39 |
| 18478 | 185525 | WDR | NBR | B | 45 | 55 | 7 | 286,37 |
| 46806 | 186240 | WDR | NBR | AS | 45 | 57 | 10 | 286,37 |
| 120968 | | WDR | NBR | ASY | 45 | 58 | 6 | 382,70 |
| 17657 | | WDR | NBR | A | 45 | 58 | 7 | |
| 38641 | 186090 | WDR | NBR | AS | 45 | 58 | 7 | 197,86 |
| 40327 | | WDR | NBR | BS | 45 | 58 | 9 | 356,67 |

| CODICE | NUOVO CODICE | TIPO | MAT. | SPEC. | d1 mm | d2 mm | b mm | LISTINO 5-2016 X 100 € |
|---|---|---|---|---|---|---|---|---|
| 40495 | | WDR | NBR | AO | 45 | 60 | 6 | 250,09 |
| 17658 | 185404 | WDR | NBR | A | 45 | 60 | 7 | 179,76 |
| 17659 | 185405 | WDR | NBR | AS | 45 | 60 | 7 | 188,44 |
| 19694 | | WDR | NBR | B | 45 | 60 | 7 | 300,01 |
| 18661 | | WDR | NBR | AS | 45 | 60 | 8 | 188,44 |
| 17660 | | WDR | NBR | A | 45 | 60 | 8 | 179,76 |
| 17661 | | WDR | NBR | B | 45 | 60 | 8 | 300,01 |
| 17662 | 185406 | WDR | NBR | A | 45 | 60 | 10 | 179,76 |
| 17663 | 184963 | WDR | NBR | AS | 45 | 60 | 10 | 188,44 |
| 17665 | 185408 | WDR | NBR | C | 45 | 60 | 10 | 497,12 |
| 26407 | | WDR | NBR | A | 45 | 60 | 12 | 311,64 |
| 17666 | | WDR | NBR | C | 45 | 60 | 12 | 497,12 |
| 17669 | | WDR | NBR | AS | 45 | 62 | 7 | 207,03 |
| 17668 | | WDR | NBR | A | 45 | 62 | 7 | 197,11 |
| 175682 | 186350 | WDR | NBR | A | 45 | 62 | 7 | 197,11 |
| 38653 | | WDR | NBR | B | 45 | 62 | 7 | 328,52 |
| 19242 | | WDR | NBR | BS | 45 | 62 | 7 | 344,64 |
| 24351 | | WDR | NBR | ASY | 45 | 62 | 7 | 376,87 |
| 175580 | | WDR | NBR | AS | 45 | 62 | 8 | 207,03 |
| 17670 | 184964 | WDR | NBR | A | 45 | 62 | 8 | 197,11 |
| 17671 | | WDR | NBR | A | 45 | 62 | 10 | 197,11 |
| 17672 | 185409 | WDR | NBR | AS | 45 | 62 | 10 | 207,03 |
| 17673 | 185410 | WDR | NBR | B | 45 | 62 | 10 | 328,52 |
| 18642 | | WDR | NBR | BS | 45 | 62 | 10 | 344,64 |
| 17675 | | WDR | NBR | CS | 45 | 62 | 10 | 577,71 |
| 17676 | 185412 | WDR | NBR | A | 45 | 62 | 12 | 197,11 |
| 185788 | | WDR | NBR | AS | 45 | 62 | 12 | 253,99 |
| 17677 | 185413 | WDR | NBR | B | 45 | 62 | 12 | 328,52 |
| 17678 | | WDR | NBR | C | 45 | 62 | 12 | 550,43 |
| 17679 | 185414 | WDR | NBR | CS | 45 | 62 | 12 | 577,71 |
| 17680 | 185415 | WDR | NBR | A | 45 | 65 | 8 | 197,11 |
| 25652 | 186029 | WDR | NBR | AS | 45 | 65 | 8 | 207,03 |
| 18479 | | WDR | NBR | B | 45 | 65 | 8 | 328,52 |
| 17681 | | WDR | NBR | A | 45 | 65 | 10 | 233,22 |
| 17682 | 185416 | WDR | NBR | AS | 45 | 65 | 10 | 207,03 |
| 17683 | | WDR | NBR | B | 45 | 65 | 10 | 328,52 |
| 17684 | 185417 | WDR | NBR | C | 45 | 65 | 10 | 550,43 |
| 39648 | | WDR | NBR | AS | 45 | 65 | 12 | 207,03 |
| 17027 | | WDR | NBR | B | 45 | 65 | 12 | 328,52 |
| 17686 | | WDR | NBR | BS | 45 | 65 | 12 | 357,04 |
| 17687 | | WDR | NBR | C | 45 | 65 | 12 | 550,43 |
| 17688 | | WDR | NBR | CS | 45 | 65 | 12 | 577,71 |
| 56350 | 186244 | WDR | NBR | A | 45 | 66 | 6 | 235,55 |
| 17689 | | WDR | NBR | A | 45 | 66 | 10 | 291,51 |
| | 186179 | WDR | NBR | AS | 45 | 68 | 8 | 316,35 |
| 17690 | 184965 | WDR | NBR | A | 45 | 68 | 10 | 235,55 |
| | 186180 | WDR | NBR | AS | 45 | 68 | 10 | 304,43 |
| 17692 | | WDR | NBR | C | 45 | 68 | 10 | 609,94 |
| 17693 | | WDR | NBR | B | 45 | 68 | 12 | 364,48 |

| CODICE | NUOVO CODICE | TIPO | MAT. | SPEC. | d1 mm | d2 mm | b mm | LISTINO 5-2016 X 100 € |
|---|---|---|---|---|---|---|---|---|
| 17694 | | WDR | NBR | C | 45 | 68 | 12 | 609,94 |
| 20250 | 185996 | WDR | NBR | A | 45 | 70 | 10 | 235,55 |
| | 186181 | WDR | NBR | A | 45 | 70 | 10 | 335,56 |
| 17695 | | WDR | NBR | B | 45 | 70 | 10 | 364,48 |
| 17696 | | WDR | NBR | C | 45 | 70 | 10 | 609,94 |
| 17699 | | WDR | NBR | C | 45 | 70 | 12 | 609,94 |
| 47274 | | WDR | NBR | A | 45 | 72 | 7 | 359,52 |
| 18694 | 185592 | WDR | NBR | A | 45 | 72 | 8 | 262,82 |
| 17700 | 185419 | WDR | NBR | AS | 45 | 72 | 8 | 273,98 |
| 38654 | | WDR | NBR | B | 45 | 72 | 8 | 419,02 |
| 17701 | | WDR | NBR | BS | 45 | 72 | 8 | 414,06 |
| 17703 | 184966 | WDR | NBR | A | 45 | 72 | 10 | 262,82 |
| 37224 | | WDR | NBR | AS | 45 | 72 | 10 | 273,74 |
| 17704 | 185420 | WDR | NBR | B | 45 | 72 | 10 | 394,23 |
| 17705 | 185421 | WDR | NBR | C | 45 | 72 | 10 | 487,99 |
| 185422 | | WDR | NBR | A | 45 | 72 | 12 | 323,23 |
| 19252 | 185792 | WDR | NBR | AS | 45 | 72 | 12 | 273,98 |
| 17708 | | WDR | NBR | BS | 45 | 72 | 12 | 414,06 |
| 17709 | | WDR | NBR | C | 45 | 72 | 12 | 663,25 |
| 26563 | | WDR | NBR | A | 45 | 75 | 6 | 503,78 |
| 39656 | | WDR | NBR | AS | 45 | 75 | 6 | 528,97 |
| 39657 | | WDR | NBR | AS | 45 | 75 | 7 | 273,98 |
| 19253 | | WDR | NBR | AS | 45 | 75 | 8 | 273,98 |
| 38442 | 185082 | WDR | NBR | A | 45 | 75 | 8 | 262,82 |
| 17711 | 185424 | WDR | NBR | A | 45 | 75 | 10 | 262,82 |
| 19254 | | WDR | NBR | AS | 45 | 75 | 10 | 273,98 |
| 17713 | | WDR | NBR | C | 45 | 75 | 10 | 663,25 |
| 185793 | 185793 | WDR | NBR | AS | 45 | 75 | 12 | 400,50 |
| 17714 | | WDR | NBR | C | 45 | 75 | 12 | 663,25 |
| 179151 | | WDR | NBR | AS | 45 | 78 | 10 | 610,13 |
| 117854 | | WDR | NBR | C | 45 | 78 | 13 | 728,95 |
| 187761 | | WDR | NBR | A | 45 | 80 | 8 | 610,11 |
| 17716 | 185425 | WDR | NBR | A | 45 | 80 | 10 | 271,50 |
| 34805 | | WDR | NBR | AS | 45 | 80 | 10 | 285,13 |
| 19731 | | WDR | NBR | B | 45 | 80 | 10 | 425,22 |
| 17717 | | WDR | NBR | C | 45 | 80 | 10 | 728,95 |
| 17719 | | WDR | NBR | A | 45 | 80 | 13 | 271,50 |
| 19753 | | WDR | NBR | B | 45 | 80 | 13 | 462,41 |
| 83756 | | WDR | NBR | BS | 45 | 80 | 13 | 483,49 |
| 17720 | | WDR | NBR | C | 45 | 80 | 13 | 728,95 |
| 38655 | | WDR | NBR | B | 45 | 85 | 8 | 457,45 |
| 39661 | | WDR | NBR | AS | 45 | 85 | 8 | 395,12 |
| 34806 | | WDR | NBR | AS | 45 | 85 | 10 | 312,41 |
| 17721 | 185426 | WDR | NBR | A | 45 | 85 | 10 | 297,53 |
| 17722 | | WDR | NBR | B | 45 | 85 | 10 | 457,45 |
| 17723 | | WDR | NBR | C | 45 | 85 | 10 | 782,26 |
| 19259 | | WDR | NBR | A | 45 | 90 | 10 | 431,08 |
| 17725 | | WDR | NBR | AS | 45 | 90 | 10 | 338,44 |
| 47276 | | WDR | NBR | A | 45 | 100 | 10 | 530,60 |

| CODICE | NUOVO CODICE | TIPO | MAT. | SPEC. | d1 mm | d2 mm | b mm | LISTINO 5-2016 X 100 € |
|---|---|---|---|---|---|---|---|---|
| 39662 | | WDR | NBR | AS | 45 | 100 | 10 | 553,89 |
| 19754 | 185869 | WDR | NBR | B | 46 | 60 | 7 | 300,01 |
| 17726 | | WDR | NBR | A | 46 | 64 | 8 | 300,01 |
| 187756 | | WDR | NBR | A | 46 | 65 | 10 | 471,08 |
| 19262 | 185796 | WDR | NBR | AS | 46 | 65 | 9 | 352,08 |
| 187762 | | WDR | NBR | A | 46 | 65 | 10 | 610,11 |
| 19953 | | WDR | NBR | A | 46,03 | 63,5 | 6,35 | 399,19 |
| 20104 | | WDR | NBR | A | 46,03 | 63,5 | 9,52 | 399,19 |
| 20839 | 186013 | WDR | NBR | A | 46,03 | 66,67 | 9,52 | 431,42 |
| 20105 | 185970 | WDR | NBR | A | 46,03 | 69,85 | 12,7 | 431,42 |
| 56408 | | WDR | NBR | A | 46,03 | 76,2 | 9,52 | 513,24 |
| 39668 | | WDR | NBR | A | 47 | 7 | 6 | 335,45 |
| 19264 | 185797 | WDR | NBR | A | 47 | 62 | 7 | 197,11 |
| 163392 | | WDR | NBR | AS | 47 | 62 | 7 | 207,07 |
| 19265 | | WDR | NBR | A | 47 | 65 | 8 | 302,12 |
| 17727 | | WDR | NBR | A | 47 | 65 | 10 | 302,12 |
| 77686 | | WDR | NBR | BS | 47 | 66 | 6 | 383,07 |
| 44247 | 186229 | WDR | NBR | A | 47 | 72 | 10 | 432,66 |
| 3995 | | WDR | NBR | B | 47,62 | 60,32 | 6,35 | 328,52 |
| 20106 | | WDR | NBR | A | 47,62 | 60,32 | 6,35 | 399,19 |
| 20107 | | WDR | NBR | A | 47,62 | 63,5 | 6,35 | 399,19 |
| 20108 | | WDR | NBR | A | 47,62 | 63,5 | 7,93 | 399,19 |
| 20109 | | WDR | NBR | A | 47,62 | 63,5 | 9,52 | 399,19 |
| 59868 | | WDR | NBR | AS | 47,62 | 63,5 | 9,52 | 419,02 |
| 19954 | | WDR | NBR | A | 47,62 | 63,5 | 12,7 | 399,19 |
| 19955 | | WDR | NBR | A | 47,62 | 65,08 | 6,35 | 431,42 |
| 20110 | | WDR | NBR | A | 47,62 | 66,67 | 9,52 | 431,42 |
| 59869 | | WDR | NBR | AS | 47,62 | 66,67 | 9,52 | 452,50 |
| 20111 | | WDR | NBR | A | 47,62 | 66,67 | 12,7 | 431,42 |
| 20112 | 185971 | WDR | NBR | A | 47,62 | 69,85 | 9,52 | 431,42 |
| 59870 | | WDR | NBR | AS | 47,62 | 69,85 | 9,52 | 452,50 |
| 19958 | | WDR | NBR | A | 47,62 | 69,85 | 12,7 | 431,42 |
| 59871 | 186274 | WDR | NBR | AS | 47,62 | 69,85 | 12,7 | 452,50 |
| 59872 | | WDR | NBR | AS | 47,62 | 73,02 | 9,52 | 499,60 |
| 20115 | 185973 | WDR | NBR | A | 47,62 | 76,2 | 9,52 | 513,24 |
| 59873 | | WDR | NBR | AS | 47,62 | 76,2 | 9,52 | 539,27 |
| 20116 | 185974 | WDR | NBR | A | 47,62 | 76,2 | 12,7 | 513,24 |
| 19966 | 185917 | WDR | NBR | A | 47,62 | 80,96 | 12,7 | 513,24 |
| 19588 | | WDR | NBR | AO | 48 | 58 | 4 | 262,60 |
| 19853 | | WDR | NBR | B | 48 | 62 | 7 | 328,52 |
| 19269 | | WDR | NBR | BS | 48 | 62 | 7 | 344,64 |
| 18664 | | WDR | NBR | AS | 48 | 62 | 8 | 207,03 |
| 17730 | 184967 | WDR | NBR | A | 48 | 62 | 8 | 197,11 |
| 25964 | | WDR | NBR | B | 48 | 62 | 8 | 328,52 |
| 82728 | | WDR | NBR | BS | 48 | 62 | 8 | 344,64 |
| 17732 | | WDR | NBR | B | 48 | 62 | 10 | 328,52 |
| 186044 | | WDR | NBR | A | 48 | 65 | 8 | 264,33 |
| 19273 | | WDR | NBR | AS | 48 | 65 | 10 | 207,03 |
| 17733 | 185427 | WDR | NBR | A | 48 | 65 | 10 | 197,11 |

| CODICE | NUOVO CODICE | TIPO | MAT. | SPEC. | d1 mm | d2 mm | b mm | LISTINO 5-2016 X 100 € |
|---|---|---|---|---|---|---|---|---|
| 17734 | | WDR | NBR | B | 48 | 65 | 10 | 365,72 |
| 17735 | | WDR | NBR | C | 48 | 65 | 10 | 550,43 |
| 17736 | | WDR | NBR | C | 48 | 65 | 12 | 550,43 |
| 83448 | 186329 | WDR | NBR | AS | 48 | 67 | 10 | 247,94 |
| 19278 | 185799 | WDR | NBR | A | 48 | 68 | 10 | 227,11 |
| 175586 | | WDR | NBR | AS | 48 | 68 | 10 | 247,94 |
| 38727 | | WDR | NBR | C | 48 | 68 | 10 | 609,94 |
| 185428 | | WDR | NBR | A | 48 | 68 | 12 | 285,25 |
| 38726 | | WDR | NBR | C | 48 | 68 | 12 | 609,94 |
| 17741 | 185429 | WDR | NBR | AS | 48 | 68 | 14 | 247,94 |
| 17742 | 185430 | WDR | NBR | A | 48 | 70 | 10 | 262,82 |
| 19874 | | WDR | NBR | C | 48 | 70 | 10 | 609,94 |
| 19283 | 185800 | WDR | NBR | AS | 48 | 70 | 12 | 434,95 |
| 18662 | 185584 | WDR | NBR | AS | 48 | 72 | 8 | 273,98 |
| 19285 | 185801 | WDR | NBR | A | 48 | 72 | 8 | 262,82 |
| 38666 | | WDR | NBR | B | 48 | 72 | 8 | 394,23 |
| 19287 | | WDR | NBR | AS | 48 | 72 | 10 | 273,98 |
| 17746 | 185431 | WDR | NBR | A | 48 | 72 | 10 | 262,82 |
| 19733 | | WDR | NBR | C | 48 | 72 | 10 | 663,25 |
| 19288 | 185802 | WDR | NBR | AS | 48 | 72 | 12 | 273,98 |
| 17749 | | WDR | NBR | B | 48 | 72 | 12 | 394,23 |
| 17750 | | WDR | NBR | C | 48 | 72 | 12 | 663,25 |
| 17751 | 185433 | WDR | NBR | A | 48 | 80 | 10 | 271,50 |
| 39690 | 186183 | WDR | NBR | AS | 48 | 80 | 10 | 285,13 |
| 17752 | | WDR | NBR | C | 48 | 80 | 10 | 728,95 |
| 17754 | | WDR | NBR | C | 48 | 80 | 13 | 728,95 |
| 185435 | | WDR | NBR | A | 48 | 85 | 10 | 421,50 |
| 21578 | | WDR | NBR | A | 49 | 65 | 10 | 300,01 |
| 20117 | | WDR | NBR | A | 49,21 | 63,5 | 9,52 | 399,19 |
| 59875 | | WDR | NBR | AS | 49,21 | 63,5 | 9,52 | 419,02 |
| 20118 | | WDR | NBR | A | 49,21 | 69,85 | 9,52 | 431,42 |
| 27023 | | WDR | NBR | AS | 49,21 | 69,85 | 9,52 | 452,50 |
| 59707 | | WDR | NBR | A | 49,21 | 76,2 | 12,7 | 513,24 |
| 59876 | | WDR | NBR | AS | 49,21 | 76,2 | 12,7 | 539,27 |
| 187752 | | WDR | NBR | A | 50 | 58 | 4 | 425,16 |
| 22094 | | WDR | NBR | AO | 50 | 58 | 4 | 262,60 |
| 74073 | | WDR | NBR | BO | 50 | 58 | 4 | 288,86 |
| 40935 | | WDR | NBR | AO | 50 | 60 | 4 | 250,09 |
| 187753 | | WDR | NBR | A | 50 | 60 | 7 | 425,16 |
| 127324 | | WDR | NBR | AS | 50 | 60 | 8 | 318,86 |
| 60361 | 186287 | WDR | NBR | A | 50 | 60 | 10 | 179,76 |
| 22095 | | WDR | NBR | AO | 50 | 62 | 5 | 273,13 |
| 184968 | | WDR | NBR | A | 50 | 62 | 7 | 204,30 |
| 186333 | | WDR | NBR | AS | 50 | 62 | 7 | 264,80 |
| 17762 | | WDR | NBR | B | 50 | 62 | 7 | 328,52 |
| 17763 | 185437 | WDR | NBR | B | 50 | 62 | 10 | 328,52 |
| 38688 | | WDR | NBR | BS | 50 | 62 | 10 | 344,64 |
| 19294 | | WDR | NBR | A | 50 | 64 | 10 | 395,68 |
| 64230 | | WDR | NBR | A | 50 | 65 | 7 | 319,24 |

| CODICE | NUOVO CODICE | TIPO | MAT. | SPEC. | d1 mm | d2 mm | b mm | LISTINO 5-2016 X 100 € |
|---|---|---|---|---|---|---|---|---|
| 44457 | | WDR | NBR | ASY | 50 | 65 | 7 | 397,74 |
| 17765 | | WDR | NBR | AS | 50 | 65 | 8 | 207,03 |
| 17764 | | WDR | NBR | A | 50 | 65 | 8 | 197,11 |
| 17766 | | WDR | NBR | B | 50 | 65 | 8 | 328,26 |
| 72659 | | WDR | NBR | BS | 50 | 65 | 8 | 344,64 |
| 90610 | | WDR | NBR | ASY | 50 | 65 | 8 | 488,45 |
| 17767 | 185438 | WDR | NBR | A | 50 | 65 | 10 | 197,11 |
| 40348 | | WDR | NBR | BS | 50 | 65 | 10 | 344,64 |
| 17769 | | WDR | NBR | C | 50 | 65 | 10 | 550,43 |
| 17770 | | WDR | NBR | B | 50 | 65 | 12 | 328,52 |
| 37207 | | WDR | NBR | AS | 50 | 68 | 8 | 247,94 |
| 17773 | 185440 | WDR | NBR | A | 50 | 68 | 8 | 235,55 |
| 19755 | | WDR | NBR | B | 50 | 68 | 8 | 364,48 |
| 69486 | | WDR | NBR | C | 50 | 68 | 9 | 609,94 |
| 37908 | | WDR | NBR | AS | 50 | 68 | 10 | 247,94 |
| 17774 | 184969 | WDR | NBR | A | 50 | 68 | 10 | 235,55 |
| 25968 | | WDR | NBR | B | 50 | 68 | 10 | 364,48 |
| 19736 | 185867 | WDR | NBR | BS | 50 | 68 | 10 | 383,07 |
| 17775 | | WDR | NBR | C | 50 | 68 | 10 | 609,94 |
| 17777 | | WDR | NBR | C | 50 | 68 | 12 | 609,94 |
| 17778 | | WDR | NBR | B | 50 | 68 | 14 | 364,48 |
| 40392 | | WDR | NBR | CS | 50 | 70 | 7 | 640,93 |
| 24363 | 185063 | WDR | NBR | A | 50 | 70 | 8 | 235,55 |
| 19303 | 185805 | WDR | NBR | BS | 50 | 70 | 8 | 383,07 |
| 44566 | | WDR | NBR | C | 50 | 70 | 8 | 609,94 |
| 19304 | 185806 | WDR | NBR | AS | 50 | 70 | 10 | 247,94 |
| 17779 | 184970 | WDR | NBR | A | 50 | 70 | 10 | 235,55 |
| 17780 | | WDR | NBR | B | 50 | 70 | 10 | 364,48 |
| 56679 | | WDR | NBR | BS | 50 | 70 | 10 | 383,07 |
| 17781 | | WDR | NBR | C | 50 | 70 | 10 | 609,94 |
| 17782 | | WDR | NBR | A | 50 | 70 | 12 | 262,82 |
| 19305 | | WDR | NBR | AS | 50 | 70 | 12 | 273,98 |
| 17784 | | WDR | NBR | C | 50 | 70 | 12 | 609,94 |
| 39707 | | WDR | NBR | AS | 50 | 72 | 7 | 273,98 |
| 79626 | | WDR | NBR | ASY | 50 | 72 | 7 | 600,02 |
| 17785 | 185441 | WDR | NBR | A | 50 | 72 | 8 | 262,82 |
| 27538 | 185067 | WDR | NBR | AS | 50 | 72 | 8 | 273,98 |
| 38667 | | WDR | NBR | B | 50 | 72 | 8 | 394,23 |
| 19308 | | WDR | NBR | AS | 50 | 72 | 10 | 273,98 |
| 17786 | 185442 | WDR | NBR | A | 50 | 72 | 10 | 262,82 |
| 17787 | | WDR | NBR | B | 50 | 72 | 10 | 394,23 |
| 17788 | | WDR | NBR | C | 50 | 72 | 10 | 663,25 |
| 17789 | 185443 | WDR | NBR | A | 50 | 72 | 12 | 262,82 |
| 19309 | 185031 | WDR | NBR | AS | 50 | 72 | 12 | 273,98 |
| 17790 | | WDR | NBR | B | 50 | 72 | 12 | 394,23 |
| 17791 | | WDR | NBR | C | 50 | 72 | 12 | 663,25 |
| 39708 | | WDR | NBR | A | 50 | 75 | 10 | 262,82 |
| 186096 | | WDR | NBR | AS | 50 | 75 | 10 | 319,42 |
| 64113 | | WDR | NBR | B | 50 | 75 | 10 | 394,23 |

| CODICE | NUOVO CODICE | TIPO | MAT. | SPEC. | d1 mm | d2 mm | b mm | LISTINO 5-2016 X 100 € |
|---|---|---|---|---|---|---|---|---|
| 17792 | | WDR | NBR | C | 50 | 75 | 10 | 663,25 |
| 19310 | | WDR | NBR | AS | 50 | 75 | 12 | 273,98 |
| 17794 | | WDR | NBR | C | 50 | 75 | 12 | 663,25 |
| 39709 | | WDR | NBR | A | 50 | 76 | 10 | 539,82 |
| 17795 | | WDR | NBR | A | 50 | 80 | 8 | 271,50 |
| 19312 | | WDR | NBR | AS | 50 | 80 | 8 | 285,13 |
| 17796 | 185444 | WDR | NBR | A | 50 | 80 | 10 | 271,50 |
| 19313 | | WDR | NBR | AS | 50 | 80 | 10 | 285,13 |
| 17798 | | WDR | NBR | C | 50 | 80 | 10 | 728,95 |
| 56900 | | WDR | NBR | CS | 50 | 80 | 10 | 764,90 |
| 17799 | | WDR | NBR | B | 50 | 80 | 12 | 462,41 |
| 17800 | | WDR | NBR | C | 50 | 80 | 12 | 728,95 |
| 17801 | | WDR | NBR | A | 50 | 80 | 13 | 271,50 |
| 26201 | 186035 | WDR | NBR | AS | 50 | 80 | 13 | 285,13 |
| 17803 | | WDR | NBR | C | 50 | 80 | 13 | 728,95 |
| 17804 | | WDR | NBR | CS | 50 | 80 | 13 | 764,90 |
| 27536 | | WDR | NBR | A | 50 | 85 | 10 | 442,32 |
| 39714 | 186185 | WDR | NBR | AS | 50 | 85 | 10 | 324,80 |
| 61729 | 186291 | WDR | NBR | B | 50 | 85 | 10 | 457,45 |
| 17805 | 185446 | WDR | NBR | C | 50 | 85 | 10 | 782,26 |
| 17808 | 185447 | WDR | NBR | A | 50 | 85 | 13 | 509,12 |
| 17809 | | WDR | NBR | C | 50 | 85 | 13 | 782,26 |
| 39716 | 186186 | WDR | NBR | AS | 50 | 90 | 8 | 338,44 |
| 17811 | | WDR | NBR | AS | 50 | 90 | 10 | 338,44 |
| 17810 | 184971 | WDR | NBR | A | 50 | 90 | 10 | 322,33 |
| 17812 | | WDR | NBR | B | 50 | 90 | 10 | 494,65 |
| 17813 | | WDR | NBR | C | 50 | 90 | 10 | 828,13 |
| 17814 | | WDR | NBR | C | 50 | 90 | 12 | 828,13 |
| 17816 | | WDR | NBR | C | 50 | 90 | 13 | 828,13 |
| 83469 | | WDR | NBR | C | 50 | 95 | 10 | 855,40 |
| 39722 | | WDR | NBR | AS | 50 | 110 | 10 | 577,97 |
| 69397 | | WDR | NBR | A | 50 | 110 | 10,5 | 550,43 |
| 47348 | | WDR | NBR | A | 50 | 110 | 12 | 684,13 |
| 20119 | 185975 | WDR | NBR | A | 50,8 | 63,5 | 6,35 | 399,19 |
| 59877 | 186275 | WDR | NBR | AS | 50,8 | 63,5 | 6,35 | 419,02 |
| 20120 | 185976 | WDR | NBR | A | 50,8 | 66,67 | 9,52 | 431,42 |
| 59878 | | WDR | NBR | AS | 50,8 | 66,67 | 9,52 | 452,50 |
| 19956 | | WDR | NBR | A | 50,8 | 68,26 | 9,52 | 431,42 |
| 20121 | 185977 | WDR | NBR | A | 50,8 | 68,26 | 12,7 | 431,42 |
| 20122 | 185978 | WDR | NBR | A | 50,8 | 69,85 | 6,35 | 431,42 |
| 19959 | 185915 | WDR | NBR | A | 50,8 | 69,85 | 9,52 | 431,42 |
| 59709 | | WDR | NBR | A | 50,8 | 69,85 | 11,11 | 431,42 |
| 59880 | | WDR | NBR | AS | 50,8 | 69,85 | 11,11 | 452,50 |
| 59881 | | WDR | NBR | AS | 50,8 | 69,85 | 12,7 | 452,50 |
| 20123 | | WDR | NBR | A | 50,8 | 73,02 | 9,52 | 476,05 |
| 59882 | | WDR | NBR | AS | 50,8 | 73,02 | 9,52 | 499,60 |
| 39753 | | WDR | NBR | A | 50,8 | 73,02 | 12,7 | 476,05 |
| 28009 | | WDR | NBR | A | 50,8 | 74,18 | 7,93 | 476,05 |
| 20124 | 185979 | WDR | NBR | A | 50,8 | 76,2 | 9,52 | 513,24 |

| CODICE | NUOVO CODICE | TIPO | MAT. | SPEC. | d1 mm | d2 mm | b mm | LISTINO 5-2016 X 100 € |
|---|---|---|---|---|---|---|---|---|
| 59883 | 186277 | WDR | NBR | AS | 50,8 | 76,2 | 9,52 | 513,24 |
| 20125 | 185980 | WDR | NBR | A | 50,8 | 76,2 | 12,7 | 513,24 |
| 59884 | | WDR | NBR | AS | 50,8 | 76,2 | 12,7 | 539,27 |
| 20844 | | WDR | NBR | A | 50,8 | 79,37 | 9,52 | 513,24 |
| 20126 | | WDR | NBR | A | 50,8 | 82,55 | 9,52 | 513,24 |
| 20128 | | WDR | NBR | A | 50,8 | 88,9 | 12,7 | 588,86 |
| 40200 | | WDR | NBR | BS | 51 | 65 | 9 | 369,43 |
| 19321 | | WDR | NBR | A | 52 | 65 | 8 | 432,79 |
| 185808 | | | NBR | AS | 52 | 65 | 9 | 287,99 |
| 19323 | | WDR | NBR | BS | 52 | 65 | 9 | 344,64 |
| 17818 | | WDR | NBR | B | 52 | 68 | 7 | 364,48 |
| 46285 | | WDR | NBR | BS | 52 | 68 | 7 | 383,07 |
| 19325 | | WDR | NBR | AS | 52 | 68 | 8 | 247,94 |
| 19324 | | WDR | NBR | A | 52 | 68 | 8 | 235,55 |
| 17819 | | WDR | NBR | B | 52 | 68 | 8 | 364,48 |
| 39726 | | WDR | NBR | A | 52 | 68 | 10 | 262,82 |
| 17820 | | WDR | NBR | C | 52 | 68 | 10 | 609,94 |
| 17821 | | WDR | NBR | C | 52 | 68 | 12 | 609,94 |
| 72972 | | WDR | NBR | BS | 52 | 68 | 13,5 | 383,07 |
| 17822 | | WDR | NBR | A | 52 | 69 | 10 | 262,82 |
| 185809 | | WDR | NBR | AS | 52 | 70 | 9 | 310,94 |
| 40202 | | WDR | NBR | BS | 52 | 70 | 9 | 383,07 |
| 107203 | | WDR | NBR | AS | 52 | 70 | 10 | 247,94 |
| 39732 | | WDR | NBR | AS | 52 | 72 | 8 | 273,98 |
| 17825 | 195691 | WDR | NBR | A | 52 | 72 | 8 | 262,82 |
| 18483 | | WDR | NBR | B | 52 | 72 | 8 | 394,23 |
| 19328 | 185033 | WDR | NBR | AS | 52 | 72 | 10 | 273,98 |
| 17827 | 185450 | WDR | NBR | C | 52 | 72 | 10 | 663,25 |
| 18482 | | WDR | NBR | B | 52 | 72 | 12 | 394,23 |
| 78372 | | WDR | NBR | BS | 52 | 72 | 12 | 414,06 |
| 17829 | 184972 | WDR | NBR | C | 52 | 72 | 12 | 663,25 |
| 39735 | | WDR | NBR | A | 52 | 75 | 10 | 291,93 |
| 17830 | | WDR | NBR | C | 52 | 75 | 10 | 663,25 |
| 17831 | 185451 | WDR | NBR | A | 52 | 75 | 12 | 297,53 |
| 17832 | | WDR | NBR | C | 52 | 75 | 12 | 663,25 |
| 17833 | | WDR | NBR | A | 52 | 80 | 10 | 271,50 |
| 17834 | | WDR | NBR | B | 52 | 80 | 10 | 462,41 |
| 26163 | | WDR | NBR | BS | 52 | 80 | 13 | 446,30 |
| 17838 | | WDR | NBR | C | 52 | 80 | 13 | 728,95 |
| 17839 | | WDR | NBR | A | 52 | 85 | 10 | 297,53 |
| 39739 | 186188 | WDR | NBR | AS | 52 | 85 | 10 | 312,41 |
| 44288 | | WDR | NBR | B | 52 | 85 | 10 | 457,45 |
| 17840 | | WDR | NBR | C | 52 | 85 | 10 | 782,26 |
| 17841 | | WDR | NBR | C | 52 | 85 | 12 | 782,26 |
| 17842 | | WDR | NBR | C | 52 | 85 | 13 | 782,26 |
| 187767 | | WDR | NBR | A | 52 | 90 | 13 | 706,80 |
| 17843 | | WDR | NBR | C | 52 | 90 | 13 | 828,13 |
| 20129 | | WDR | NBR | A | 52,38 | 66,67 | 7,93 | 431,42 |
| 19961 | | WDR | NBR | A | 52,38 | 73,02 | 9,52 | 476,05 |

| CODICE | NUOVO CODICE | TIPO | MAT. | SPEC. | d1 mm | d2 mm | b mm | LISTINO 5-2016 X 100 € |
|---|---|---|---|---|---|---|---|---|
| 59886 | | WDR | NBR | AS | 52,38 | 73,02 | 9,52 | 499,60 |
| 19963 | | WDR | NBR | A | 52,38 | 76,2 | 9,52 | 513,24 |
| 22234 | | WDR | NBR | A | 52,38 | 80,96 | 9,52 | 513,24 |
| 17844 | 184973 | WDR | NBR | A | 53 | 68 | 10 | 307,45 |
| 17845 | | WDR | NBR | B | 53 | 68 | 10 | 364,48 |
| 19821 | | WDR | NBR | A | 53 | 80 | 10 | 271,50 |
| 20131 | | WDR | NBR | A | 53,97 | 68,26 | 7,93 | 431,42 |
| 20132 | | WDR | NBR | A | 53,97 | 69,85 | 7,93 | 431,42 |
| 46825 | | WDR | NBR | BO | 53,97 | 73,02 | 6,35 | 454,28 |
| 20134 | 185981 | WDR | NBR | A | 53,97 | 73,02 | 9,52 | 476,05 |
| 59887 | 186278 | WDR | NBR | AS | 53,97 | 73,02 | 9,52 | 499,60 |
| 20135 | | WDR | NBR | A | 53,97 | 73,02 | 12,7 | 476,05 |
| 20136 | | WDR | NBR | A | 53,97 | 76,2 | 9,52 | 513,24 |
| 59888 | | WDR | NBR | AS | 53,97 | 76,2 | 9,52 | 539,27 |
| 19964 | | WDR | NBR | A | 53,97 | 76,2 | 12,7 | 513,24 |
| 59889 | | WDR | NBR | AS | 53,97 | 76,2 | 12,7 | 539,27 |
| 59891 | | WDR | NBR | AS | 53,97 | 79,37 | 9,52 | 539,27 |
| 59892 | 185112 | WDR | NBR | AS | 53,97 | 82,55 | 9,52 | 539,27 |
| 20138 | | WDR | NBR | A | 53,97 | 85,72 | 12,7 | 588,86 |
| 20139 | 185982 | WDR | NBR | A | 53,97 | 88,9 | 12,7 | 588,86 |
| 115606 | | WDR | NBR | BO | 53,97 | 93 | 6,35 | 523,37 |
| 18695 | | WDR | NBR | A | 54 | 70 | 10 | 301,14 |
| 38669 | | WDR | NBR | B | 54 | 70 | 10 | 364,48 |
| 19338 | 185035 | WDR | NBR | AS | 54 | 72 | 10 | 273,98 |
| 17848 | | WDR | NBR | C | 54 | 72 | 10 | 663,25 |
| 17850 | | WDR | NBR | C | 54 | 72 | 12 | 663,25 |
| 19339 | | WDR | NBR | BS | 54 | 72,5 | 9 | 414,06 |
| 27008 | | WDR | NBR | B | 54 | 74 | 8 | 394,23 |
| 25920 | | WDR | NBR | A | 54 | 78 | 12 | 589,04 |
| 17858 | | WDR | NBR | C | 54 | 80 | 13 | 728,95 |
| 187764 | | WDR | NBR | A | 54 | 85 | 10 | 639,40 |
| 17860 | | WDR | NBR | C | 54 | 85 | 10 | 782,26 |
| 25725 | | WDR | NBR | C | 54 | 90 | 13 | 828,13 |
| 22096 | | WDR | NBR | AO | 55 | 63 | 5 | 308,31 |
| 42092 | | WDR | NBR | BO | 55 | 65 | 5 | 359,57 |
| 42093 | | WDR | NBR | BO | 55 | 67 | 5 | 371,10 |
| 18696 | | WDR | NBR | A | 55 | 68 | 8 | 235,55 |
| 175575 | | WDR | NBR | AS | 55 | 68 | 8 | 247,94 |
| 120658 | | WDR | NBR | ASY | 55 | 70 | 7 | 524,40 |
| 17865 | | WDR | NBR | AS | 55 | 70 | 8 | 247,94 |
| 17864 | 184974 | WDR | NBR | A | 55 | 70 | 8 | 235,55 |
| 17866 | | WDR | NBR | B | 55 | 70 | 8 | 364,48 |
| 40205 | | WDR | NBR | BS | 55 | 70 | 8 | 383,07 |
| 19349 | 185812 | WDR | NBR | AS | 55 | 70 | 10 | 247,94 |
| 17867 | 185454 | WDR | NBR | A | 55 | 70 | 10 | 235,55 |
| 17868 | 185455 | WDR | NBR | B | 55 | 70 | 10 | 364,48 |
| 17869 | | WDR | NBR | C | 55 | 70 | 10 | 609,94 |
| 17870 | | WDR | NBR | C | 55 | 70 | 12 | 609,94 |
| 19350 | | WDR | NBR | AS | 55 | 72 | 8 | 273,98 |

| CODICE | NUOVO CODICE | TIPO | MAT. | SPEC. | d1 mm | d2 mm | b mm | LISTINO 5-2016 X 100 € |
|---|---|---|---|---|---|---|---|---|
| 17871 | 185456 | WDR | NBR | A | 55 | 72 | 8 | 262,82 |
| 18484 | | WDR | NBR | B | 55 | 72 | 8 | 394,23 |
| 32409 | 190656 | WDR | NBR | ASY | 55 | 72 | 8 | 600,02 |
| 19351 | | WDR | NBR | AS | 55 | 72 | 9 | 520,79 |
| 17873 | | WDR | NBR | AS | 55 | 72 | 10 | 273,98 |
| 17872 | | WDR | NBR | A | 55 | 72 | 10 | 262,82 |
| 17874 | | WDR | NBR | B | 55 | 72 | 10 | 394,23 |
| 44047 | | WDR | NBR | BS | 55 | 72 | 10 | 414,06 |
| 17875 | 185457 | WDR | NBR | C | 55 | 72 | 10 | 663,25 |
| 17876 | | WDR | NBR | B | 55 | 72 | 12 | 394,23 |
| 17877 | 185458 | WDR | NBR | C | 55 | 72 | 12 | 663,25 |
| 19352 | | WDR | NBR | A | 55 | 75 | 8 | 287,34 |
| 185117 | | WDR | NBR | AS | 55 | 75 | 8 | 301,70 |
| 37093 | 185076 | WDR | NBR | AS | 55 | 75 | 10 | 273,98 |
| 17878 | 185459 | WDR | NBR | A | 55 | 75 | 10 | 262,82 |
| 38670 | | WDR | NBR | B | 55 | 75 | 10 | 394,23 |
| 17879 | | WDR | NBR | C | 55 | 75 | 10 | 663,25 |
| 17880 | 185460 | WDR | NBR | A | 55 | 75 | 12 | 262,82 |
| 17881 | | WDR | NBR | B | 55 | 75 | 12 | 394,23 |
| 17882 | | WDR | NBR | C | 55 | 75 | 12 | 663,25 |
| 19756 | | WDR | NBR | CS | 55 | 76,2 | 10 | 728,95 |
| 186032 | | WDR | NBR | AS | 55 | 78 | 10 | 377,50 |
| 40209 | | WDR | NBR | BS | 55 | 78 | 12 | 483,49 |
| 17886 | | WDR | NBR | C | 55 | 78 | 12 | 728,95 |
| 38722 | | WDR | NBR | C | 55 | 78 | 13 | 728,95 |
| 17887 | | WDR | NBR | A | 55 | 80 | 8 | 271,50 |
| 36550 | | WDR | NBR | AS | 55 | 80 | 8 | 285,13 |
| 18485 | | WDR | NBR | B | 55 | 80 | 8 | 425,22 |
| 17888 | 185461 | WDR | NBR | A | 55 | 80 | 10 | 271,50 |
| 19593 | | WDR | NBR | AD | 55 | 80 | 10 | 525,03 |
| 17889 | | WDR | NBR | AS | 55 | 80 | 10 | 285,13 |
| 17890 | | WDR | NBR | B | 55 | 80 | 10 | 425,22 |
| 17040 | | WDR | NBR | C | 55 | 80 | 10 | 728,95 |
| 17893 | | WDR | NBR | A | 55 | 80 | 12 | 373,35 |
| 186189 | | WDR | NBR | AS | 55 | 80 | 12 | 392,02 |
| 17895 | | WDR | NBR | C | 55 | 80 | 12 | 728,95 |
| 17898 | | WDR | NBR | B | 55 | 80 | 13 | 425,22 |
| 18644 | | WDR | NBR | BS | 55 | 80 | 13 | 446,30 |
| 61799 | | WDR | NBR | CS | 55 | 80 | 13 | 764,90 |
| 107857 | | WDR | NBR | ASY | 55 | 80 | 13 | 614,90 |
| 40498 | | WDR | NBR | BO | 55 | 82 | 10 | 463,29 |
| 17900 | | WDR | NBR | A | 55 | 85 | 8 | 297,53 |
| 39759 | | WDR | NBR | AS | 55 | 85 | 8 | 312,41 |
| 26942 | 186042 | WDR | NBR | AS | 55 | 85 | 10 | 312,41 |
| 17902 | 184975 | WDR | NBR | A | 55 | 85 | 10 | 297,53 |
| 17903 | 185464 | WDR | NBR | C | 55 | 85 | 10 | 782,26 |
| 17904 | | WDR | NBR | C | 55 | 85 | 12 | 782,26 |
| 17043 | | WDR | NBR | BS | 55 | 85 | 13 | 479,77 |
| 17906 | 185466 | WDR | NBR | C | 55 | 85 | 13 | 782,26 |

| CODICE | NUOVO CODICE | TIPO | MAT. | SPEC. | d1 mm | d2 mm | b mm | LISTINO 5-2016 X 100 € |
|---|---|---|---|---|---|---|---|---|
| 40212 | | WDR | NBR | BS | 55 | 85 | 14 | 479,77 |
| 44270 | | WDR | NBR | A | 55 | 88 | 10 | 428,75 |
| 83947 | | WDR | NBR | BO | 55 | 90 | 6 | 501,33 |
| 83424 | | WDR | NBR | A | 55 | 90 | 8 | 322,33 |
| 17908 | | WDR | NBR | A | 55 | 90 | 10 | 322,33 |
| 17909 | 184976 | WDR | NBR | AS | 55 | 90 | 10 | 338,44 |
| 185467 | | WDR | NBR | A | 55 | 90 | 13 | 417,02 |
| 17911 | | WDR | NBR | B | 55 | 90 | 13 | 494,65 |
| 17912 | | WDR | NBR | C | 55 | 90 | 13 | 828,13 |
| 39199 | | WDR | NBR | A | 55 | 100 | 10 | 505,80 |
| 36667 | | WDR | NBR | AS | 55 | 100 | 10 | 401,67 |
| 40980 | 186214 | WDR | NBR | AS | 55 | 100 | 12 | 530,60 |
| 17913 | | WDR | NBR | C | 55 | 100 | 13 | 898,79 |
| 21860 | | WDR | NBR | AS | 55,56 | 73,02 | 12,7 | 499,60 |
| 20933 | 186014 | WDR | NBR | A | 55,56 | 76,2 | 9,52 | 513,24 |
| 59895 | | WDR | NBR | AS | 55,56 | 76,2 | 9,52 | 539,27 |
| 59896 | | WDR | NBR | AS | 55,56 | 82,55 | 9,52 | 539,27 |
| 19360 | 185816 | WDR | NBR | A | 56 | 70 | 8 | 322,33 |
| 39765 | | WDR | NBR | AS | 56 | 72 | 7 | 340,62 |
| 17915 | 185468 | WDR | NBR | A | 56 | 72 | 8 | 262,82 |
| 17916 | | WDR | NBR | B | 56 | 72 | 8 | 394,23 |
| 18645 | | WDR | NBR | BS | 56 | 72 | 8 | 414,06 |
| 38721 | | WDR | NBR | C | 56 | 72 | 10 | 663,25 |
| 19362 | 185817 | WDR | NBR | A | 56 | 80 | 8 | 271,50 |
| 187763 | | WDR | NBR | A | 56 | 80 | 10 | 610,11 |
| 19364 | | WDR | NBR | A | 56 | 85 | 8 | 297,53 |
| 17921 | | WDR | NBR | B | 56 | 90 | 13 | 494,65 |
| 17922 | | WDR | NBR | C | 56 | 90 | 13 | 593,58 |
| 187758 | | WDR | NBR | A | 51 | 72 | 10 | 558,75 |
| 40399 | | WDR | NBR | C | 57 | 80 | 12 | 728,95 |
| 187765 | | WDR | NBR | C | 57 | 85 | 12 | 639,40 |
| 17924 | | WDR | NBR | C | 57 | 85 | 13 | 782,26 |
| 59897 | | WDR | NBR | AS | 57,15 | 69,85 | 9,52 | 452,50 |
| 20141 | 185983 | WDR | NBR | A | 57,15 | 76,2 | 9,52 | 513,24 |
| 56285 | 186243 | WDR | NBR | AS | 57,15 | 76,2 | 9,52 | 539,27 |
| 19965 | | WDR | NBR | A | 57,15 | 76,2 | 12,7 | 513,24 |
| 42640 | 186219 | WDR | NBR | A | 57,15 | 77,88 | 11,91 | 513,24 |
| 20845 | | WDR | NBR | A | 57,15 | 79,37 | 9,52 | 513,24 |
| 59898 | | WDR | NBR | AS | 57,15 | 79,37 | 9,52 | 539,27 |
| 20817 | | WDR | NBR | A | 57,15 | 80,96 | 12,7 | 513,24 |
| 20818 | 186010 | WDR | NBR | A | 57,15 | 82,55 | 12,7 | 513,24 |
| 83470 | | WDR | NBR | C | 57,15 | 85,09 | 11,9 | 828,13 |
| 35716 | | WDR | NBR | A | 57,15 | 85,72 | 9,52 | 588,86 |
| 19869 | 185879 | WDR | NBR | A | 57,15 | 85,72 | 12,7 | 588,86 |
| 59900 | | WDR | NBR | AS | 57,15 | 85,72 | 12,7 | 618,62 |
| 20142 | | WDR | NBR | A | 57,15 | 88,9 | 12,7 | 588,86 |
| 59901 | | WDR | NBR | AS | 57,15 | 88,9 | 12,7 | 618,62 |
| 35052 | | WDR | NBR | A | 57,15 | 130 | 9,52 | 1.120,70 |
| 17926 | 185470 | WDR | NBR | A | 58 | 72 | 8 | 262,82 |

| CODICE | NUOVO CODICE | TIPO | MAT. | SPEC. | d1 mm | d2 mm | b mm | LISTINO 5-2016 X 100 € |
|---|---|---|---|---|---|---|---|---|
| 39779 | 186190 | WDR | NBR | AS | 58 | 72 | 8 | 273,98 |
| 17927 | 185471 | WDR | NBR | B | 58 | 72 | 8 | 394,23 |
| 19371 | | WDR | NBR | BS | 58 | 72 | 8 | 414,06 |
| 130960 | | WDR | NBR | AS | 58 | 72 | 10 | 273,98 |
| 17928 | | WDR | NBR | B | 58 | 75 | 8 | 394,23 |
| 187759 | | WDR | NBR | A | 58 | 75 | 10 | 558,75 |
| 62961 | | WDR | NBR | B | 58 | 75 | 10 | 394,23 |
| 17929 | | WDR | NBR | C | 58 | 75 | 12 | 663,25 |
| 17259 | | WDR | NBR | A | 58 | 78 | 13 | 383,07 |
| 17930 | | WDR | NBR | A | 58 | 80 | 8 | 271,50 |
| 185822 | | WDR | NBR | AS | 58 | 80 | 8 | 362,09 |
| 175587 | 186347 | WDR | NBR | AS | 58 | 80 | 9 | 285,13 |
| 38061 | 186075 | WDR | NBR | AS | 58 | 80 | 10 | 285,13 |
| 17931 | 185472 | WDR | NBR | A | 58 | 80 | 10 | 271,50 |
| 44289 | | WDR | NBR | B | 58 | 80 | 10 | 425,22 |
| 17932 | | WDR | NBR | C | 58 | 80 | 10 | 728,95 |
| 19381 | | WDR | NBR | A | 58 | 80 | 12 | 535,65 |
| 19382 | 185823 | WDR | NBR | AS | 58 | 80 | 12 | 285,13 |
| 17933 | | WDR | NBR | C | 58 | 80 | 12 | 728,95 |
| 38719 | 186095 | WDR | NBR | C | 58 | 80 | 13 | 728,95 |
| 17934 | 185473 | WDR | NBR | A | 58 | 85 | 10 | 297,53 |
| 17936 | | WDR | NBR | C | 58 | 85 | 10 | 782,26 |
| 187766 | | WDR | NBR | A | 58 | 85 | 13 | 639,40 |
| 17938 | | WDR | NBR | C | 58 | 85 | 13 | 782,26 |
| 17939 | 185474 | WDR | NBR | A | 58 | 90 | 10 | 322,33 |
| 17940 | | WDR | NBR | C | 58 | 90 | 13 | 828,13 |
| 20248 | | WDR | NBR | A | 58,73 | 85,32 | 7,93 | 588,86 |
| 59715 | | WDR | NBR | A | 58,73 | 85,72 | 9,52 | 588,86 |
| 59904 | | WDR | NBR | AS | 58,73 | 85,72 | 9,52 | 618,62 |
| 38443 | 185083 | WDR | NBR | A | 60 | 70 | 7 | 235,55 |
| 69627 | 185114 | WDR | NBR | B | 60 | 70 | 7 | 364,48 |
| 21504 | | WDR | NBR | AO | 60 | 70 | 10 | 280,05 |
| 19390 | 185826 | WDR | NBR | A | 60 | 72 | 8 | 262,82 |
| 17941 | | WDR | NBR | B | 60 | 72 | 8 | 394,23 |
| 17942 | 195685 | WDR | NBR | A | 60 | 75 | 8 | 262,82 |
| 18476 | 195695 | WDR | NBR | AS | 60 | 75 | 8 | 273,98 |
| 127197 | | WDR | NBR | ASY | 60 | 75 | 8 | 951,25 |
| 17943 | | WDR | NBR | B | 60 | 75 | 8 | 394,23 |
| 40218 | | WDR | NBR | BS | 60 | 75 | 8 | 414,06 |
| 38718 | 186094 | WDR | NBR | C | 60 | 75 | 8 | 663,25 |
| 44232 | 185108 | WDR | NBR | A | 60 | 75 | 10 | 262,82 |
| 39784 | | WDR | NBR | AS | 60 | 75 | 10 | 273,98 |
| 19394 | 185828 | WDR | NBR | A | 60 | 78 | 9 | 507,48 |
| 39788 | 186191 | WDR | NBR | A | 60 | 78 | 10 | 330,75 |
| 69612 | | WDR | NBR | A | 60 | 80 | 7 | 271,56 |
| 17946 | 185476 | WDR | NBR | AS | 60 | 80 | 7 | 285,13 |
| 24353 | | WDR | NBR | ASY | 60 | 80 | 7 | 560,60 |
| 17947 | 184978 | WDR | NBR | A | 60 | 80 | 8 | 271,50 |
| 36551 | | WDR | NBR | AS | 60 | 80 | 8 | 285,13 |

| CODICE | NUOVO CODICE | TIPO | MAT. | SPEC. | d1 mm | d2 mm | b mm | LISTINO 5-2016 X 100 € |
|---|---|---|---|---|---|---|---|---|
| 18486 | | WDR | NBR | B | 60 | 80 | 8 | 425,22 |
| 19396 | | WDR | NBR | BS | 60 | 80 | 8 | 446,30 |
| 38487 | | WDR | NBR | C | 60 | 80 | 8 | 728,95 |
| 17949 | | WDR | NBR | A | 60 | 80 | 10 | 271,50 |
| 17950 | | WDR | NBR | AS | 60 | 80 | 10 | 285,13 |
| 17951 | | WDR | NBR | B | 60 | 80 | 10 | 425,22 |
| 38689 | | WDR | NBR | BS | 60 | 80 | 10 | 446,30 |
| 17952 | | WDR | NBR | C | 60 | 80 | 10 | 728,95 |
| 19398 | | WDR | NBR | AS | 60 | 80 | 12 | 325,30 |
| 17954 | | WDR | NBR | B | 60 | 80 | 12 | 425,22 |
| 17955 | | WDR | NBR | C | 60 | 80 | 12 | 728,95 |
| 19990 | | WDR | NBR | CS | 60 | 80 | 12 | 764,90 |
| 17957 | | WDR | NBR | B | 60 | 80 | 13 | 425,22 |
| 17958 | | WDR | NBR | C | 60 | 80 | 13 | 728,95 |
| 185830 | | WDR | NBR | AS | 60 | 82 | 9 | 445,88 |
| 19400 | 185831 | WDR | NBR | A | 60 | 82 | 12 | 339,66 |
| 39792 | | WDR | NBR | AS | 60 | 82 | 12 | 356,64 |
| 42538 | | WDR | NBR | B | 60 | 82 | 12 | 457,45 |
| 44359 | | WDR | NBR | CS | 60 | 82 | 12 | 669,55 |
| 17959 | 184979 | WDR | NBR | A | 60 | 85 | 8 | 297,53 |
| 39793 | | WDR | NBR | AS | 60 | 85 | 8 | 312,41 |
| 17962 | 185479 | WDR | NBR | AS | 60 | 85 | 10 | 312,41 |
| 17961 | | WDR | NBR | A | 60 | 85 | 10 | 297,53 |
| 17963 | | WDR | NBR | C | 60 | 85 | 10 | 782,26 |
| 39794 | | WDR | NBR | AS | 60 | 85 | 12 | 312,41 |
| 17964 | | WDR | NBR | C | 60 | 85 | 12 | 782,26 |
| 18487 | | WDR | NBR | B | 60 | 85 | 13 | 457,45 |
| 38690 | | WDR | NBR | BS | 60 | 85 | 13 | 479,77 |
| 19739 | | WDR | NBR | C | 60 | 85 | 13 | 782,26 |
| 17966 | | WDR | NBR | A | 60 | 90 | 8 | 322,33 |
| 35043 | 186060 | WDR | NBR | AS | 60 | 90 | 8 | 338,44 |
| 17967 | | WDR | NBR | B | 60 | 90 | 8 | 494,65 |
| 17968 | | WDR | NBR | A | 60 | 90 | 10 | 322,33 |
| 17969 | 185480 | WDR | NBR | AS | 60 | 90 | 10 | 338,44 |
| 19738 | | WDR | NBR | B | 60 | 90 | 10 | 494,65 |
| 19740 | | WDR | NBR | BS | 60 | 90 | 10 | 519,44 |
| 19404 | | WDR | NBR | C | 60 | 90 | 10 | 828,13 |
| 187768 | | WDR | NBR | A | 60 | 90 | 12 | 706,80 |
| 17970 | | WDR | NBR | B | 60 | 90 | 12 | 494,65 |
| 17971 | | WDR | NBR | C | 60 | 90 | 12 | 828,13 |
| 17972 | | WDR | NBR | A | 60 | 90 | 13 | 355,80 |
| 17973 | | WDR | NBR | B | 60 | 90 | 13 | 494,65 |
| 17974 | | WDR | NBR | BS | 60 | 90 | 13 | 519,44 |
| 17975 | | WDR | NBR | C | 60 | 90 | 13 | 828,13 |
| 17976 | 185481 | WDR | NBR | A | 60 | 95 | 10 | 355,80 |
| 19407 | | WDR | NBR | AS | 60 | 95 | 10 | 373,15 |
| 17977 | | WDR | NBR | C | 60 | 95 | 10 | 855,40 |
| 17979 | 185482 | WDR | NBR | A | 60 | 100 | 10 | 383,07 |
| 186638 | | WDR | NBR | AS | 60 | 100 | 10 | 402,23 |

| CODICE | NUOVO CODICE | TIPO | MAT. | SPEC. | d1 mm | d2 mm | b mm | LISTINO 5-2016 X 100 € |
|---|---|---|---|---|---|---|---|---|
| 17980 | | WDR | NBR | C | 60 | 100 | 12 | 898,79 |
| 17981 | | WDR | NBR | A | 60 | 100 | 13 | 737,80 |
| 17982 | | WDR | NBR | C | 60 | 100 | 13 | 898,79 |
| 39801 | | WDR | NBR | AS | 60 | 110 | 10 | 577,96 |
| 17983 | | WDR | NBR | A | 60 | 110 | 12 | 550,43 |
| 19586 | | WDR | NBR | A | 60 | 110 | 13 | 550,43 |
| 75276 | | WDR | NBR | C | 60 | 110 | 13 | 1.169,05 |
| 133549 | | WDR | NBR | A | 60 | 120 | 12 | 826,67 |
| 19962 | | WDR | NBR | A | 60,32 | 73,02 | 7,93 | 476,05 |
| 59906 | | WDR | NBR | AS | 60,32 | 73,02 | 7,93 | 499,60 |
| 59907 | | WDR | NBR | AS | 60,32 | 73,02 | 9,52 | 499,60 |
| 20144 | | WDR | NBR | A | 60,32 | 76,2 | 9,52 | 513,24 |
| 59908 | | WDR | NBR | AS | 60,32 | 76,2 | 9,52 | 539,27 |
| 59909 | | WDR | NBR | AS | 60,32 | 79,37 | 9,52 | 539,27 |
| 42541 | | WDR | NBR | BS | 60,32 | 79,37 | 12,7 | 446,30 |
| 20146 | | WDR | NBR | A | 60,32 | 82,55 | 12,7 | 513,24 |
| 59911 | 186280 | WDR | NBR | AS | 60,32 | 85,72 | 9,52 | 618,62 |
| 20147 | | WDR | NBR | A | 60,32 | 85,72 | 12,7 | 588,86 |
| 59912 | | WDR | NBR | AS | 60,32 | 85,72 | 12,7 | 618,62 |
| 20148 | 185984 | WDR | NBR | A | 60,32 | 88,9 | 9,52 | 588,86 |
| 56409 | | WDR | NBR | A | 60,32 | 88,9 | 11,11 | 588,86 |
| 20149 | | WDR | NBR | A | 60,32 | 88,9 | 12,7 | 588,86 |
| 59913 | | WDR | NBR | AS | 60,32 | 88,9 | 12,7 | 618,62 |
| 20821 | | WDR | NBR | A | 60,32 | 92,07 | 12,7 | 689,28 |
| 40503 | | WDR | NBR | C | 60,32 | 92,07 | 12,7 | 1.124,26 |
| 20150 | 185985 | WDR | NBR | A | 61,91 | 82,55 | 9,52 | 513,24 |
| 20151 | | WDR | NBR | A | 61,91 | 85,72 | 12,7 | 588,86 |
| 38671 | 185085 | WDR | NBR | B | 62 | 75 | 10 | 394,23 |
| 19410 | | WDR | NBR | A | 62 | 80 | 10 | 297,53 |
| 17986 | | WDR | NBR | B | 62 | 80 | 10 | 425,22 |
| 40226 | | WDR | NBR | BS | 62 | 80 | 10 | 446,30 |
| 17987 | | WDR | NBR | C | 62 | 80 | 10 | 728,95 |
| 17988 | | WDR | NBR | A | 62 | 80 | 12 | 349,53 |
| 17989 | | WDR | NBR | C | 62 | 80 | 12 | 728,95 |
| 79697 | | WDR | NBR | ASY | 62 | 85 | 7 | 530,36 |
| 40227 | | WDR | NBR | BS | 62 | 85 | 8 | 479,77 |
| 17990 | | WDR | NBR | A | 62 | 85 | 10 | 297,53 |
| 39812 | 186195 | WDR | NBR | AS | 62 | 85 | 10 | 312,41 |
| 17991 | 185483 | WDR | NBR | B | 62 | 85 | 10 | 457,45 |
| 17992 | | WDR | NBR | C | 62 | 85 | 10 | 782,26 |
| 17993 | | WDR | NBR | C | 62 | 85 | 12 | 782,26 |
| 17995 | | WDR | NBR | C | 62 | 85 | 13 | 782,26 |
| 39814 | 185104 | WDR | NBR | AS | 62 | 90 | 10 | 338,44 |
| 17996 | 184980 | WDR | NBR | A | 62 | 90 | 10 | 322,33 |
| 17998 | | WDR | NBR | C | 62 | 90 | 10 | 828,13 |
| 18000 | | WDR | NBR | C | 62 | 90 | 12 | 828,13 |
| 19412 | | WDR | NBR | A | 62 | 90 | 13 | 322,33 |
| 44290 | | WDR | NBR | B | 62 | 90 | 13 | 494,65 |
| 39816 | 186196 | WDR | NBR | A | 62 | 95 | 10 | 530,60 |

| CODICE | NUOVO CODICE | TIPO | MAT. | SPEC. | d1 mm | d2 mm | b mm | LISTINO 5-2016 X 100 € |
|---|---|---|---|---|---|---|---|---|
| 18001 | | WDR | NBR | A | 62 | 100 | 10 | 530,60 |
| 18002 | | WDR | NBR | A | 62 | 100 | 12 | 505,80 |
| 187771 | | WDR | NBR | A | 62 | 100 | 13 | 816,22 |
| 18003 | | WDR | NBR | C | 62 | 100 | 13 | 898,79 |
| 196152 | 185836 | WDR | NBR | AS | 63 | 80 | 9 | 285,13 |
| 185836 | | WDR | NBR | AS | 63 | 80 | 12 | 407,33 |
| 19415 | 185837 | WDR | NBR | A | 63 | 85 | 10 | 297,53 |
| 56472 | | WDR | NBR | C | 63 | 85 | 10 | 782,26 |
| 44251 | | WDR | NBR | A | 63 | 85 | 13 | 443,59 |
| 19417 | 185838 | WDR | NBR | A | 63 | 90 | 10 | 322,33 |
| 39821 | 186197 | WDR | NBR | AS | 63 | 90 | 10 | 338,44 |
| 56729 | | WDR | NBR | A | 63,5 | 76,2 | 9,52 | 513,24 |
| 59719 | | WDR | NBR | A | 63,5 | 80,96 | 9,52 | 513,24 |
| 59915 | | WDR | NBR | AS | 63,5 | 80,96 | 9,52 | 539,27 |
| 60863 | | WDR | NBR | C | 63,5 | 80,96 | 11,11 | 782,26 |
| 59916 | 186281 | WDR | NBR | AS | 63,5 | 82,55 | 9,52 | 539,27 |
| 20155 | | WDR | NBR | A | 63,5 | 82,55 | 12,7 | 513,24 |
| 20156 | | WDR | NBR | A | 63,5 | 85,72 | 12,7 | 588,86 |
| 19995 | 185922 | WDR | NBR | A | 63,5 | 88,9 | 9,52 | 588,86 |
| 20249 | | WDR | NBR | A | 63,5 | 88,9 | 12,7 | 588,86 |
| 59918 | | WDR | NBR | AS | 63,5 | 88,9 | 12,7 | 618,62 |
| 39825 | | WDR | NBR | AS | 63,5 | 90,09 | 12,7 | 723,99 |
| 20157 | 185987 | WDR | NBR | A | 63,5 | 92,07 | 12,7 | 689,28 |
| 20158 | | WDR | NBR | A | 63,5 | 95,25 | 12,7 | 689,28 |
| 59922 | 186282 | WDR | NBR | AS | 63,5 | 95,25 | 12,7 | 723,99 |
| 20160 | | WDR | NBR | A | 63,5 | 98,42 | 12,7 | 689,28 |
| 18009 | 185484 | WDR | NBR | A | 64 | 80 | 8 | 271,50 |
| 18010 | 185485 | WDR | NBR | B | 64 | 80 | 8 | 425,22 |
| 18011 | | WDR | NBR | BS | 64 | 80 | 8 | 446,30 |
| 18012 | 184981 | WDR | NBR | A | 64 | 85 | 10 | 493,62 |
| 38488 | | WDR | NBR | C | 64 | 85 | 13 | 782,26 |
| 40405 | | WDR | NBR | C | 64 | 90 | 10 | 828,13 |
| 18015 | 185486 | WDR | NBR | AS | 64 | 90 | 13 | 338,44 |
| 25969 | | WDR | NBR | BS | 64 | 90 | 13 | 519,44 |
| 38715 | | WDR | NBR | C | 64 | 90 | 13 | 828,13 |
| 25727 | | WDR | NBR | C | 64 | 100 | 13 | 898,79 |
| 48032 | 185109 | WDR | NBR | AS | 65 | 75 | 8 | 273,98 |
| 18016 | | WDR | NBR | A | 65 | 80 | 8 | 271,50 |
| 39827 | | WDR | NBR | A | 65 | 80 | 8 | 398,57 |
| 18017 | 185487 | WDR | NBR | B | 65 | 80 | 8 | 425,22 |
| 38691 | 186093 | WDR | NBR | BS | 65 | 80 | 8 | 446,30 |
| 18018 | 185488 | WDR | NBR | A | 65 | 80 | 10 | 271,50 |
| 20676 | 185999 | WDR | NBR | AS | 65 | 80 | 10 | 285,13 |
| 18020 | | WDR | NBR | C | 65 | 80 | 10 | 728,95 |
| 18022 | | WDR | NBR | B | 65 | 80 | 12 | 425,22 |
| 18023 | | WDR | NBR | C | 65 | 80 | 12 | 728,95 |
| 18024 | | WDR | NBR | C | 65 | 80 | 13 | 728,95 |
| 19419 | 185839 | WDR | NBR | A | 65 | 85 | 8 | 297,53 |
| 18025 | | WDR | NBR | A | 65 | 85 | 10 | 297,53 |

| CODICE | NUOVO CODICE | TIPO | MAT. | SPEC. | d1 mm | d2 mm | b mm | LISTINO 5-2016 X 100 € |
|---|---|---|---|---|---|---|---|---|
| 18026 | 185489 | WDR | NBR | AS | 65 | 85 | 10 | 312,41 |
| 118324 | | WDR | NBR | ASY | 65 | 85 | 10 | 814,38 |
| 18027 | | WDR | NBR | B | 65 | 85 | 10 | 457,45 |
| 18028 | | WDR | NBR | C | 65 | 85 | 10 | 782,26 |
| 18029 | 185490 | WDR | NBR | A | 65 | 85 | 12 | 297,53 |
| 19420 | 185840 | WDR | NBR | AS | 65 | 85 | 12 | 312,41 |
| 18031 | | WDR | NBR | C | 65 | 85 | 12 | 782,26 |
| 18033 | | WDR | NBR | B | 65 | 85 | 13 | 457,45 |
| 185860 | | WDR | NBR | C | 65 | 85 | 13 | 931,19 |
| 40244 | | WDR | NBR | BS | 65 | 88 | 12 | 544,23 |
| 48534 | | WDR | NBR | ASY | 65 | 90 | 7 | 782,54 |
| 41027 | | WDR | NBR | AS | 65 | 90 | 8 | 468,71 |
| 19422 | | WDR | NBR | AS | 65 | 90 | 10 | 338,44 |
| 18034 | 185492 | WDR | NBR | A | 65 | 90 | 10 | 322,33 |
| 18035 | | WDR | NBR | B | 65 | 90 | 10 | 494,65 |
| 19743 | | WDR | NBR | BS | 65 | 90 | 10 | 519,44 |
| 18036 | | WDR | NBR | C | 65 | 90 | 10 | 828,13 |
| 18037 | 185493 | WDR | NBR | A | 65 | 90 | 12 | 322,33 |
| 18038 | | WDR | NBR | B | 65 | 90 | 12 | 559,11 |
| 18039 | 185494 | WDR | NBR | C | 65 | 90 | 12 | 828,13 |
| 41411 | | WDR | NBR | CS | 65 | 90 | 12 | 869,04 |
| 18040 | | WDR | NBR | A | 65 | 90 | 13 | 322,33 |
| 19424 | | WDR | NBR | AS | 65 | 90 | 13 | 338,57 |
| 18041 | | WDR | NBR | B | 65 | 90 | 13 | 494,65 |
| 18647 | | WDR | NBR | BS | 65 | 90 | 13 | 519,44 |
| 18042 | 185495 | WDR | NBR | C | 65 | 90 | 13 | 828,13 |
| 18044 | | WDR | NBR | A | 65 | 95 | 10 | 355,80 |
| 18046 | | WDR | NBR | C | 65 | 95 | 10 | 855,40 |
| 19425 | | WDR | NBR | AS | 65 | 95 | 13 | 373,15 |
| 18048 | | WDR | NBR | C | 65 | 95 | 13 | 855,40 |
| 18050 | | WDR | NBR | A | 65 | 100 | 10 | 383,07 |
| 19427 | | WDR | NBR | AS | 65 | 100 | 10 | 401,67 |
| 18051 | | WDR | NBR | B | 65 | 100 | 10 | 612,42 |
| 18052 | | WDR | NBR | C | 65 | 100 | 10 | 898,79 |
| 18053 | | WDR | NBR | A | 65 | 100 | 12 | 409,11 |
| 19428 | | WDR | NBR | AS | 65 | 100 | 12 | 401,67 |
| 18054 | | WDR | NBR | C | 65 | 100 | 12 | 898,79 |
| 18646 | | WDR | NBR | BS | 65 | 100 | 13 | 643,41 |
| 18056 | | WDR | NBR | C | 65 | 100 | 13 | 898,79 |
| 44406 | | WDR | NBR | CS | 65 | 100 | 13 | 943,42 |
| 18057 | 185496 | WDR | NBR | A | 65 | 110 | 10 | 578,21 |
| 80858 | | WDR | NBR | AS | 65 | 110 | 12 | 607,12 |
| 117913 | | WDR | NBR | A | 65 | 120 | 10 | 891,07 |
| 19429 | | WDR | NBR | A | 65 | 120 | 12 | 675,64 |
| 187795 | | WDR | NBR | AS | 65 | 120 | 12 | 726,69 |
| 34921 | | WDR | NBR | AS | 65 | 120 | 13 | 817,49 |
| 18058 | | WDR | NBR | A | 65 | 125 | 12 | 751,27 |
| 20819 | | WDR | NBR | A | 65,08 | 85,72 | 9,52 | 588,86 |
| 20161 | 185988 | WDR | NBR | A | 66,67 | 85,72 | 7,93 | 588,86 |

| CODICE | NUOVO CODICE | TIPO | MAT. | SPEC. | d1 mm | d2 mm | b mm | LISTINO 5-2016 X 100 € |
|---|---|---|---|---|---|---|---|---|
| 19967 | | WDR | NBR | A | 66,67 | 85,72 | 9,52 | 588,86 |
| 59923 | | WDR | NBR | AS | 66,67 | 85,72 | 9,52 | 618,62 |
| 20162 | | WDR | NBR | A | 66,67 | 92,07 | 12,7 | 689,28 |
| 59926 | | WDR | NBR | AS | 66,67 | 92,07 | 12,7 | 723,99 |
| 19970 | | WDR | NBR | A | 66,67 | 95,25 | 12,7 | 689,28 |
| 59927 | | WDR | NBR | AS | 66,67 | 95,25 | 12,7 | 723,99 |
| 20823 | | WDR | NBR | A | 66,67 | 101,6 | 12,7 | 741,35 |
| 187769 | | WDR | NBR | A | 67 | 90 | 13 | 706,80 |
| 57695 | 186253 | WDR | NBR | AS | 68 | 80 | 10 | 480,97 |
| 81277 | 185118 | WDR | NBR | BS | 68 | 85 | 8 | 479,77 |
| 38303 | | WDR | NBR | A | 68 | 85 | 10 | 297,53 |
| 39910 | 186198 | WDR | NBR | AS | 68 | 85 | 10 | 312,41 |
| 17374 | | WDR | NBR | B | 68 | 85 | 10 | 457,45 |
| 130942 | | WDR | NBR | AS | 68 | 90 | 7 | 338,44 |
| 18060 | | WDR | NBR | A | 68 | 90 | 10 | 322,33 |
| 19434 | 185843 | WDR | NBR | AS | 68 | 90 | 10 | 338,44 |
| 40248 | | WDR | NBR | B | 68 | 90 | 10 | 494,65 |
| 19758 | | WDR | NBR | C | 68 | 90 | 10 | 828,13 |
| 40249 | | WDR | NBR | BS | 68 | 90 | 12 | 544,23 |
| 25976 | | WDR | NBR | C | 68 | 90 | 12 | 828,13 |
| 18063 | | WDR | NBR | A | 68 | 95 | 13 | 378,11 |
| 18064 | | WDR | NBR | A | 68 | 100 | 10 | 383,07 |
| 19439 | | WDR | NBR | AS | 68 | 100 | 10 | 401,67 |
| 18064 | | WDR | NBR | A | 68 | 100 | 12 | 383,07 |
| 38489 | | WDR | NBR | C | 68 | 100 | 12 | 898,79 |
| 18065 | | WDR | NBR | A | 68 | 100 | 13 | 570,09 |
| 83471 | | WDR | NBR | C | 68 | 110 | 13 | 1.169,05 |
| 59721 | | WDR | NBR | A | 68,26 | 95,25 | 12,7 | 689,28 |
| 20163 | | WDR | NBR | A | 68,26 | 101,6 | 12,7 | 741,35 |
| 74240 | | WDR | NBR | BS | 69 | 85 | 10 | 479,77 |
| 26195 | | WDR | NBR | A | 69,85 | 86,09 | 7,93 | 588,86 |
| 27022 | | WDR | NBR | AS | 69,85 | 88,9 | 9,52 | 618,62 |
| 20847 | | WDR | NBR | AS | 69,85 | 88,9 | 12,7 | 618,62 |
| 20165 | | WDR | NBR | A | 69,85 | 92,07 | 12,7 | 689,28 |
| 59932 | | WDR | NBR | AS | 69,85 | 95,25 | 9,52 | 723,99 |
| 19971 | | WDR | NBR | A | 69,85 | 95,25 | 12,7 | 689,28 |
| 59933 | | WDR | NBR | AS | 69,85 | 95,25 | 12,7 | 723,99 |
| 20166 | 185989 | WDR | NBR | A | 69,85 | 98,42 | 12,7 | 689,28 |
| 59934 | | WDR | NBR | AS | 69,85 | 98,42 | 12,7 | 723,99 |
| 20167 | | WDR | NBR | A | 69,85 | 101,6 | 12,7 | 741,35 |
| 59935 | | WDR | NBR | AS | 69,85 | 101,6 | 12,7 | 778,54 |
| 59936 | | WDR | NBR | AS | 69,85 | 107,95 | 12,7 | 778,54 |
| 22097 | | WDR | NBR | AO | 70 | 78 | 5 | 323,84 |
| 18067 | 184982 | WDR | NBR | AS | 70 | 85 | 8 | 312,41 |
| 18066 | 185497 | WDR | NBR | A | 70 | 85 | 8 | 297,53 |
| 18068 | | WDR | NBR | B | 70 | 85 | 8 | 457,45 |
| 24346 | | WDR | NBR | BS | 70 | 85 | 8 | 479,77 |
| 18069 | | WDR | NBR | A | 70 | 85 | 10 | 396,71 |
| 39924 | | WDR | NBR | AS | 70 | 90 | 7 | 338,45 |

| CODICE | NUOVO CODICE | TIPO | MAT. | SPEC. | d1 mm | d2 mm | b mm | LISTINO 5-2016 X 100 € |
|---|---|---|---|---|---|---|---|---|
| 24354 | | WDR | NBR | ASY | 70 | 90 | 7 | 609,72 |
| 18072 | | WDR | NBR | A | 70 | 90 | 10 | 322,33 |
| 18073 | | WDR | NBR | AS | 70 | 90 | 10 | 338,44 |
| 18074 | 185498 | WDR | NBR | B | 70 | 90 | 10 | 494,65 |
| 18075 | | WDR | NBR | BS | 70 | 90 | 10 | 544,23 |
| 18076 | | WDR | NBR | C | 70 | 90 | 10 | 828,13 |
| 18077 | | WDR | NBR | A | 70 | 90 | 12 | 322,33 |
| 18079 | 185499 | WDR | NBR | C | 70 | 90 | 12 | 828,13 |
| 18080 | | WDR | NBR | CS | 70 | 90 | 12 | 869,04 |
| 39925 | | WDR | NBR | AS | 70 | 90 | 13 | 475,72 |
| 18081 | 185500 | WDR | NBR | B | 70 | 90 | 13 | 559,11 |
| 18082 | 185501 | WDR | NBR | C | 70 | 90 | 13 | 828,13 |
| 19445 | 185846 | WDR | NBR | AS | 70 | 92 | 12 | 490,12 |
| 19446 | 185037 | WDR | NBR | A | 70 | 95 | 10 | 355,80 |
| 39928 | 186199 | WDR | NBR | AS | 70 | 95 | 10 | 373,15 |
| 39929 | | WDR | NBR | AS | 70 | 95 | 12 | 583,09 |
| 18085 | 185502 | WDR | NBR | A | 70 | 95 | 13 | 355,80 |
| 185847 | | WDR | NBR | AS | 70 | 95 | 13 | 583,09 |
| 18488 | | WDR | NBR | B | 70 | 95 | 13 | 559,11 |
| 18648 | | WDR | NBR | BS | 70 | 95 | 13 | 587,62 |
| 41201 | | WDR | NBR | A | 70 | 100 | 6 | 506,64 |
| 60655 | | WDR | NBR | A | 70 | 100 | 8 | 382,53 |
| 19449 | 185038 | WDR | NBR | AS | 70 | 100 | 10 | 401,67 |
| 18088 | 184983 | WDR | NBR | A | 70 | 100 | 10 | 383,07 |
| 18089 | | WDR | NBR | B | 70 | 100 | 10 | 612,42 |
| 18090 | | WDR | NBR | C | 70 | 100 | 10 | 898,79 |
| 18091 | | WDR | NBR | A | 70 | 100 | 12 | 409,11 |
| 39932 | | WDR | NBR | AS | 70 | 100 | 12 | 444,44 |
| 18092 | | WDR | NBR | BS | 70 | 100 | 12 | 643,41 |
| 18093 | 185503 | WDR | NBR | C | 70 | 100 | 12 | 898,79 |
| 18095 | | WDR | NBR | C | 70 | 100 | 13 | 898,79 |
| 18096 | | WDR | NBR | A | 70 | 105 | 13 | 547,40 |
| 18097 | | WDR | NBR | C | 70 | 105 | 13 | 1.169,05 |
| 19451 | | WDR | NBR | A | 70 | 110 | 8 | 550,43 |
| | | WDR | NBR | AS | 70 | 110 | 8 | 577,95 |
| 65687 | | WDR | NBR | A | 70 | 110 | 10 | 550,43 |
| 39936 | | WDR | NBR | AS | 70 | 110 | 10 | 577,71 |
| 18098 | | WDR | NBR | B | 70 | 110 | 10 | 795,90 |
| 83449 | | WDR | NBR | AS | 70 | 110 | 12 | 577,71 |
| 18099 | | WDR | NBR | A | 70 | 110 | 12 | 550,43 |
| 39938 | | WDR | NBR | AS | 70 | 110 | 13 | 577,71 |
| 19452 | 185039 | WDR | NBR | A | 70 | 110 | 13 | 550,43 |
| 18101 | | WDR | NBR | C | 70 | 110 | 13 | 1.169,05 |
| 83426 | | WDR | NBR | A | 70 | 120 | 12 | 675,64 |
| 187773 | | WDR | NBR | A | 70 | 120 | 10 | 1.189,00 |
| 18104 | | WDR | NBR | A | 70 | 120 | 13 | 1.189,00 |
| 48742 | | WDR | NBR | C | 70 | 120 | 13 | 1.319,05 |
| 39940 | | WDR | NBR | AS | 70 | 125 | 12 | 788,46 |
| 73972 | | WDR | NBR | AS | 71,81 | 86,05 | 7 | 618,62 |

| CODICE | NUOVO CODICE | TIPO | MAT. | SPEC. | d1 mm | d2 mm | b mm | LISTINO 5-2016 X 100 € |
|---|---|---|---|---|---|---|---|---|
| 38693 | | WDR | NBR | BS | 72 | 84 | 7 | 479,77 |
| 18106 | | WDR | NBR | A | 72 | 85 | 8 | 537,10 |
| 20677 | | WDR | NBR | A | 72 | 85 | 10 | 409,11 |
| 61800 | | WDR | NBR | AS | 72 | 86 | 7 | 586,68 |
| 38755 | | WDR | NBR | A | 72 | 90 | 10 | 322,33 |
| 73959 | | WDR | NBR | AS | 72 | 90 | 10 | 338,44 |
| 40446 | | WDR | NBR | C | 72 | 90 | 10 | 828,13 |
| 185064 | | WDR | NBR | AS | 72 | 90 | 12 | 399,05 |
| 18107 | | WDR | NBR | C | 72 | 90 | 13 | 828,13 |
| 19458 | 185848 | WDR | NBR | A | 72 | 95 | 10 | 399,19 |
| 56726 | | WDR | NBR | C | 72 | 95 | 10 | 855,40 |
| 24364 | | WDR | NBR | A | 72 | 95 | 12 | 378,11 |
| 38490 | | WDR | NBR | C | 72 | 95 | 13 | 855,40 |
| 18109 | | WDR | NBR | A | 72 | 100 | 10 | 409,11 |
| 35704 | | WDR | NBR | AS | 72 | 100 | 10 | 515,72 |
| 19549 | | WDR | NBR | AS | 72 | 105 | 10 | 889,46 |
| 38444 | | WDR | NBR | A | 72 | 110 | 12 | 550,43 |
| 39944 | | WDR | NBR | A | 73 | 95 | 10 | 427,28 |
| 60591 | | WDR | NBR | B | 73,02 | 92,07 | 9,52 | 559,11 |
| 20170 | | WDR | NBR | A | 73,02 | 92,07 | 9,52 | 689,28 |
| 59938 | | WDR | NBR | AS | 73,02 | 92,07 | 9,52 | 723,99 |
| 20171 | | WDR | NBR | A | 73,02 | 95,25 | 12,7 | 689,28 |
| 59939 | | WDR | NBR | AS | 73,02 | 95,25 | 12,7 | 723,99 |
| 83472 | | WDR | NBR | C | 73,02 | 98,42 | 11,11 | 898,79 |
| 20822 | | WDR | NBR | A | 73,02 | 98,42 | 12,7 | 689,28 |
| 59940 | | WDR | NBR | AS | 73,02 | 98,42 | 12,7 | 723,99 |
| 41526 | | WDR | NBR | C | 73,02 | 101,6 | 9,52 | 1.169,05 |
| 20172 | | WDR | NBR | A | 73,02 | 101,6 | 12,7 | 741,35 |
| 59941 | | WDR | NBR | AS | 73,02 | 101,6 | 12,7 | 778,54 |
| 187770 | | WDR | NBR | A | 74 | 90 | 10 | 706,80 |
| 18111 | | WDR | NBR | BS | 74 | 90 | 10 | 519,44 |
| 57182 | | WDR | NBR | A | 74 | 135 | 15 | 751,27 |
| 36272 | | WDR | NBR | A | 74,61 | 95,25 | 9,52 | 689,28 |
| 18114 | | WDR | NBR | A | 75 | 90 | 8 | 322,33 |
| 27537 | | WDR | NBR | AS | 75 | 90 | 8 | 338,44 |
| 18115 | | WDR | NBR | A | 75 | 90 | 10 | 322,33 |
| 26174 | | WDR | NBR | AS | 75 | 90 | 10 | 338,44 |
| 18116 | 185504 | WDR | NBR | C | 75 | 90 | 10 | 828,13 |
| 18117 | | WDR | NBR | C | 75 | 90 | 12 | 828,13 |
| 69275 | | WDR | NBR | A | 75 | 95 | 8 | 681,82 |
| 39951 | | WDR | NBR | AS | 75 | 95 | 10 | 373,15 |
| 18118 | | WDR | NBR | A | 75 | 95 | 10 | 355,80 |
| 18119 | | WDR | NBR | B | 75 | 95 | 10 | 559,11 |
| 25971 | | WDR | NBR | BS | 75 | 95 | 10 | 651,52 |
| 18120 | 185505 | WDR | NBR | C | 75 | 95 | 10 | 855,40 |
| 18121 | 185506 | WDR | NBR | A | 75 | 95 | 12 | 355,80 |
| 19461 | 185849 | WDR | NBR | AS | 75 | 95 | 12 | 428,94 |
| 18122 | | WDR | NBR | B | 75 | 95 | 12 | 559,11 |
| 79361 | | WDR | NBR | BS | 75 | 95 | 12 | 587,62 |

| CODICE | NUOVO CODICE | TIPO | MAT. | SPEC. | d1 mm | d2 mm | b mm | LISTINO 5-2016 X 100 € |
|---|---|---|---|---|---|---|---|---|
| 18123 | 185507 | WDR | NBR | C | 75 | 95 | 12 | 855,40 |
| 18124 | | WDR | NBR | A | 75 | 100 | 10 | 383,07 |
| 18125 | | WDR | NBR | AS | 75 | 100 | 10 | 401,67 |
| 19463 | | WDR | NBR | BS | 75 | 100 | 10 | 643,41 |
| 18127 | | WDR | NBR | C | 75 | 100 | 10 | 898,79 |
| 18128 | | WDR | NBR | CS | 75 | 100 | 10 | 898,79 |
| 18129 | 185509 | WDR | NBR | A | 75 | 100 | 12 | 409,11 |
| 18131 | | WDR | NBR | C | 75 | 100 | 12 | 943,42 |
| 18132 | | WDR | NBR | A | 75 | 100 | 13 | 582,38 |
| 19759 | | WDR | NBR | B | 75 | 100 | 13 | 612,42 |
| 18650 | | WDR | NBR | BS | 75 | 100 | 13 | 643,41 |
| 18133 | | WDR | NBR | C | 75 | 100 | 13 | 898,79 |
| 18134 | | WDR | NBR | CS | 75 | 100 | 13 | 898,79 |
| 19824 | | WDR | NBR | A | 75 | 101 | 12 | 902,75 |
| 41082 | | WDR | NBR | A | 75 | 105 | 12 | 550,43 |
| 39954 | | WDR | NBR | AS | 75 | 105 | 12 | 577,97 |
| 74602 | | WDR | NBR | C | 75 | 105 | 12 | 1.169,05 |
| 19466 | | WDR | NBR | AS | 75 | 105 | 13 | 577,71 |
| 18136 | | WDR | NBR | C | 75 | 105 | 13 | 1.169,05 |
| 19467 | | WDR | NBR | AS | 75 | 105 | 15 | 628,17 |
| 39956 | | WDR | NBR | AS | 75 | 110 | 10 | 577,71 |
| 39957 | | WDR | NBR | AS | 75 | 110 | 12 | 577,71 |
| 18137 | | WDR | NBR | A | 75 | 110 | 12 | 550,43 |
| 18138 | | WDR | NBR | B | 75 | 110 | 13 | 795,90 |
| 18139 | | WDR | NBR | C | 75 | 110 | 13 | 1.169,05 |
| 26272 | | WDR | NBR | A | 75 | 115 | 10 | 675,64 |
| 187772 | | WDR | NBR | A | 75 | 115 | 13 | 1.097,50 |
| 17103 | | WDR | NBR | C | 75 | 115 | 13 | 1.319,05 |
| 131001 | | WDR | NBR | AS | 75 | 120 | 10 | 709,12 |
| 18140 | | WDR | NBR | A | 75 | 120 | 12 | 675,64 |
| 117912 | | WDR | NBR | AS | 75 | 120 | 12 | 747,20 |
| 40143 | | WDR | NBR | BS | 75 | 121 | 13 | 1.112,02 |
| 150147 | | WDR | NBR | AS | 75 | 130 | 10 | 934,70 |
| 35526 | | WDR | NBR | A | 75 | 130 | 13 | 751,27 |
| 18141 | | WDR | NBR | A | 76 | 105 | 13 | 550,43 |
| 59722 | | WDR | NBR | A | 76,2 | 95,25 | 7,93 | 689,28 |
| 22181 | | WDR | NBR | A | 76,2 | 95,25 | 9,52 | 689,28 |
| 59942 | | WDR | NBR | AS | 76,2 | 95,25 | 9,52 | 723,99 |
| 19972 | | WDR | NBR | A | 76,2 | 95,25 | 12,7 | 689,28 |
| 22182 | | WDR | NBR | A | 76,2 | 98,42 | 9,52 | 689,28 |
| 20174 | | WDR | NBR | A | 76,2 | 101,6 | 9,52 | 741,35 |
| 24663 | | WDR | NBR | C | 76,2 | 101,6 | 11,11 | 1.169,05 |
| 59943 | | WDR | NBR | AS | 76,2 | 101,6 | 9,52 | 778,54 |
| 59609 | | WDR | NBR | AS | 76,2 | 101,6 | 12,7 | 778,54 |
| 20175 | | WDR | NBR | A | 76,2 | 107,95 | 12,7 | 741,35 |
| 59944 | | WDR | NBR | AS | 76,2 | 107,95 | 12,7 | 778,54 |
| 19974 | | WDR | NBR | A | 76,2 | 114,3 | 12,7 | 864,08 |
| 59945 | | WDR | NBR | AS | 76,2 | 114,3 | 12,7 | 907,47 |
| 38714 | | WDR | NBR | C | 77 | 95 | 10 | 855,40 |

| CODICE | NUOVO CODICE | TIPO | MAT. | SPEC. | d1 mm | d2 mm | b mm | LISTINO 5-2016 X 100 € |
|---|---|---|---|---|---|---|---|---|
| 36443 | | WDR | NBR | C | 78 | 95 | 13 | 855,40 |
| 18144 | 184984 | WDR | NBR | A | 78 | 100 | 10 | 383,07 |
| 40437 | | WDR | NBR | C | 78 | 100 | 10 | 898,79 |
| 38713 | | WDR | NBR | C | 78 | 100 | 12 | 898,79 |
| 40436 | | WDR | NBR | C | 78 | 105 | 13 | 1.169,05 |
| 38756 | | WDR | NBR | A | 78 | 110 | 12 | 699,25 |
| 19975 | | WDR | NBR | A | 79,37 | 101,6 | 12,7 | 741,35 |
| 20178 | | WDR | NBR | A | 79,37 | 104,77 | 12,7 | 741,35 |
| 59946 | | WDR | NBR | AS | 79,37 | 104,77 | 12,7 | 778,54 |
| 20179 | | WDR | NBR | A | 79,37 | 107,95 | 12,7 | 741,35 |
| 20180 | | WDR | NBR | A | 79,37 | 114,3 | 12,7 | 864,08 |
| 72689 | | WDR | NBR | A | 79,37 | 114,3 | 15,87 | 864,08 |
| 43949 | | WDR | NBR | A | 79,37 | 120,65 | 12,7 | 1.019,04 |
| 92937 | | WDR | NBR | AO | 80 | 90 | 5 | 380,32 |
| 41088 | | WDR | NBR | AO | 80 | 95 | 5 | 418,34 |
| 36770 | | WDR | NBR | A | 80 | 95 | 8 | 355,80 |
| 39965 | | WDR | NBR | A | 80 | 95 | 10 | 759,76 |
| 24355 | | WDR | NBR | ASY | 80 | 100 | 7 | 824,41 |
| 42580 | | WDR | NBR | BO | 80 | 100 | 7 | 579,69 |
| 18145 | | WDR | NBR | A | 80 | 100 | 10 | 383,07 |
| 18146 | | WDR | NBR | AS | 80 | 100 | 10 | 401,67 |
| 18147 | | WDR | NBR | B | 80 | 100 | 10 | 612,42 |
| 18149 | | WDR | NBR | C | 80 | 100 | 10 | 898,79 |
| 48746 | | WDR | NBR | CS | 80 | 100 | 10 | 943,42 |
| 185850 | | WDR | NBR | AS | 80 | 100 | 12 | 544,79 |
| 18151 | | WDR | NBR | C | 80 | 100 | 12 | 898,79 |
| 18152 | | WDR | NBR | A | 80 | 100 | 13 | 582,38 |
| 19475 | | WDR | NBR | AS | 80 | 100 | 13 | 401,67 |
| 18153 | | WDR | NBR | B | 80 | 100 | 13 | 612,42 |
| 19760 | | WDR | NBR | BS | 80 | 100 | 13 | 643,41 |
| 18154 | 185512 | WDR | NBR | C | 80 | 100 | 13 | 898,79 |
| 38703 | | WDR | NBR | CS | 80 | 100 | 13 | 943,42 |
| 41092 | | WDR | NBR | A | 80 | 105 | 7 | 750,74 |
| 18155 | | WDR | NBR | A | 80 | 105 | 10 | 550,43 |
| 39966 | | WDR | NBR | AS | 80 | 105 | 10 | 577,97 |
| 27605 | | WDR | NBR | A | 80 | 105 | 12 | 550,43 |
| 77126 | | WDR | NBR | BS | 80 | 105 | 12 | 835,57 |
| 19476 | | WDR | NBR | AS | 80 | 105 | 13 | 577,71 |
| 18156 | | WDR | NBR | A | 80 | 105 | 13 | 550,43 |
| 18157 | | WDR | NBR | B | 80 | 105 | 13 | 795,90 |
| 25972 | | WDR | NBR | BS | 80 | 105 | 13 | 835,57 |
| 18158 | | WDR | NBR | C | 80 | 105 | 13 | 1.169,05 |
| 76625 | | WDR | NBR | B | 80 | 105 | 15 | 795,90 |
| 18160 | | WDR | NBR | AS | 80 | 110 | 10 | 577,71 |
| 18159 | | WDR | NBR | A | 80 | 110 | 10 | 550,43 |
| 18161 | | WDR | NBR | B | 80 | 110 | 10 | 795,90 |
| 18162 | | WDR | NBR | C | 80 | 110 | 10 | 1.169,05 |
| 26935 | | WDR | NBR | AS | 80 | 110 | 12 | 577,71 |
| 18163 | | WDR | NBR | A | 80 | 110 | 12 | 550,43 |

| CODICE | NUOVO CODICE | TIPO | MAT. | SPEC. | d1 mm | d2 mm | b mm | LISTINO 5-2016 X 100 € |
|---|---|---|---|---|---|---|---|---|
| 18165 | | WDR | NBR | C | 80 | 110 | 12 | 1.169,05 |
| 18166 | 185513 | WDR | NBR | A | 80 | 110 | 13 | 550,43 |
| 39968 | | WDR | NBR | AS | 80 | 110 | 13 | 653,66 |
| 18167 | | WDR | NBR | B | 80 | 110 | 13 | 795,90 |
| 18168 | | WDR | NBR | BS | 80 | 110 | 13 | 835,57 |
| 18169 | | WDR | NBR | C | 80 | 110 | 13 | 1.169,05 |
| 38740 | | WDR | NBR | CS | 80 | 110 | 13 | 1.227,32 |
| 19678 | | WDR | NBR | A | 80 | 115 | 10 | 653,07 |
| 27984 | | WDR | NBR | AS | 80 | 115 | 10 | 685,73 |
| 18171 | | WDR | NBR | A | 80 | 115 | 12 | 675,64 |
| 144063 | | WDR | NBR | A | 80 | 120 | 12 | 826,47 |
| 18173 | | WDR | NBR | A | 80 | 120 | 13 | 675,64 |
| 39974 | | WDR | NBR | AS | 80 | 120 | 13 | 709,42 |
| 18175 | | WDR | NBR | C | 80 | 120 | 13 | 1.319,05 |
| 50973 | | WDR | NBR | AS | 80 | 125 | 10 | 788,46 |
| 18176 | | WDR | NBR | A | 80 | 125 | 12 | 751,27 |
| 39975 | | WDR | NBR | A | 80 | 125 | 13 | 751,27 |
| 41095 | | WDR | NBR | AS | 80 | 125 | 13 | 788,84 |
| 18177 | | WDR | NBR | B | 80 | 125 | 13 | 1.058,71 |
| 18178 | | WDR | NBR | C | 80 | 125 | 13 | 1.424,43 |
| 18180 | | WDR | NBR | A | 80 | 140 | 13 | 829,37 |
| 34922 | | WDR | NBR | AS | 80 | 140 | 13 | 870,83 |
| 35239 | | WDR | NBR | A | 80,96 | 111,12 | 12,7 | 864,08 |
| 83450 | | WDR | NBR | AS | 80,96 | 120,65 | 12,7 | 1.069,87 |
| 18181 | | WDR | NBR | A | 82 | 105 | 12 | 550,43 |
| 38492 | | WDR | NBR | C | 82 | 105 | 13 | 1.169,05 |
| 18182 | | WDR | NBR | A | 82 | 110 | 12 | 550,43 |
| 18183 | | WDR | NBR | C | 82 | 110 | 13 | 1.169,05 |
| 59948 | | WDR | NBR | AS | 82,55 | 101,6 | 12,7 | 778,54 |
| 24437 | | WDR | NBR | A | 82,55 | 107,95 | 7,93 | 741,35 |
| 59949 | | WDR | NBR | AS | 82,55 | 107,95 | 12,7 | 778,54 |
| 48748 | | WDR | NBR | C | 82,55 | 107,95 | 15,87 | 1.169,05 |
| 20182 | | WDR | NBR | A | 82,55 | 114,3 | 12,7 | 864,08 |
| 59951 | | WDR | NBR | AS | 82,55 | 114,3 | 12,7 | 907,47 |
| 59952 | | WDR | NBR | AS | 82,55 | 117,47 | 12,7 | 907,47 |
| 78292 | | WDR | NBR | BS | 82,55 | 120,65 | 12,7 | 1.112,02 |
| 24425 | | WDR | NBR | A | 82,55 | 120,65 | 12,7 | 1.019,04 |
| 36273 | | WDR | NBR | C | 82,55 | 133,35 | 12,7 | 1.557,08 |
| 18184 | | WDR | NBR | C | 83 | 110 | 12 | 1.169,05 |
| 89802 | | WDR | NBR | A | 83 | 110 | 13 | 653,27 |
| 38200 | | WDR | NBR | C | 83 | 110 | 13 | 1.169,05 |
| 38495 | | WDR | NBR | C | 84 | 105 | 13 | 1.169,05 |
| 55937 | | WDR | NBR | C | 84 | 110 | 12 | 1.169,05 |
| 19826 | | WDR | NBR | AS | 84 | 120 | 16 | 818,60 |
| 21010 | | WDR | NBR | A | 84,13 | 111,12 | 12,7 | 864,08 |
| 44466 | | WDR | NBR | A | 85 | 100 | 9 | 383,07 |
| 18185 | | WDR | NBR | B | 85 | 100 | 9 | 612,42 |
| 39980 | | WDR | NBR | A | 85 | 100 | 10 | 664,49 |
| 39979 | | WDR | NBR | AS | 85 | 100 | 10 | 577,71 |

| CODICE | NUOVO CODICE | TIPO | MAT. | SPEC. | d1 mm | d2 mm | b mm | LISTINO 5-2016 X 100 € |
|---|---|---|---|---|---|---|---|---|
| 19481 | | WDR | NBR | A | 85 | 100 | 12 | 607,82 |
| 39981 | 186200 | WDR | NBR | AS | 85 | 100 | 12 | 638,37 |
| 18186 | | WDR | NBR | C | 85 | 100 | 12 | 898,79 |
| 18187 | | WDR | NBR | C | 85 | 100 | 13 | 898,79 |
| 44100 | | WDR | NBR | ASY | 85 | 105 | 7,5 | 1.106,85 |
| 38494 | | WDR | NBR | AS | 85 | 105 | 10 | 577,71 |
| 19483 | | WDR | NBR | A | 85 | 105 | 10 | 550,43 |
| 18188 | | WDR | NBR | B | 85 | 105 | 10 | 795,90 |
| 18189 | | WDR | NBR | C | 85 | 105 | 10 | 1.169,05 |
| 40150 | | WDR | NBR | B | 85 | 105 | 12 | 795,90 |
| 18190 | | WDR | NBR | A | 85 | 105 | 13 | 550,43 |
| 19485 | | WDR | NBR | AS | 85 | 105 | 13 | 577,71 |
| 18191 | | WDR | NBR | B | 85 | 105 | 13 | 795,90 |
| 18192 | | WDR | NBR | C | 85 | 105 | 13 | 1.169,05 |
| 36054 | | WDR | NBR | A | 85 | 110 | 10 | 550,43 |
| 35787 | | WDR | NBR | AS | 85 | 110 | 10 | 577,95 |
| 18193 | 185514 | WDR | NBR | A | 85 | 110 | 12 | 550,43 |
| 19985 | | WDR | NBR | AS | 85 | 110 | 12 | 577,71 |
| 18194 | | WDR | NBR | B | 85 | 110 | 12 | 795,90 |
| 19487 | | WDR | NBR | BS | 85 | 110 | 12 | 835,57 |
| 18195 | | WDR | NBR | C | 85 | 110 | 12 | 1.169,05 |
| 18196 | | WDR | NBR | AS | 85 | 110 | 13 | 577,71 |
| 18698 | | WDR | NBR | A | 85 | 110 | 13 | 550,43 |
| 40152 | | WDR | NBR | BS | 85 | 110 | 13 | 835,57 |
| 18197 | | WDR | NBR | C | 85 | 110 | 13 | 1.169,05 |
| 18198 | | WDR | NBR | CS | 85 | 110 | 13 | 1.227,32 |
| 38496 | | WDR | NBR | C | 85 | 110 | 15 | 1.169,05 |
| 18200 | | WDR | NBR | A | 85 | 115 | 13 | 675,64 |
| 19676 | | WDR | NBR | C | 85 | 115 | 13 | 1.319,05 |
| 19489 | | WDR | NBR | A | 85 | 115 | 15 | 675,64 |
| 74149 | | WDR | NBR | AS | 85 | 120 | 10 | 709,12 |
| 19490 | | WDR | NBR | A | 85 | 120 | 12 | 675,64 |
| 26936 | | WDR | NBR | AS | 85 | 120 | 12 | 554,58 |
| 18201 | | WDR | NBR | B | 85 | 120 | 12 | 979,37 |
| 18202 | 185515 | WDR | NBR | A | 85 | 120 | 13 | 831,58 |
| 19491 | | WDR | NBR | AS | 85 | 120 | 13 | 709,12 |
| 18203 | | WDR | NBR | C | 85 | 120 | 13 | 1.319,05 |
| 59788 | | WDR | NBR | C | 85 | 120 | 15 | 1.319,05 |
| 18204 | | WDR | NBR | A | 85 | 125 | 12 | 751,27 |
| 18205 | | WDR | NBR | C | 85 | 125 | 13 | 1.424,43 |
| 18206 | | WDR | NBR | A | 85 | 126 | 13 | 786,49 |
| 36886 | | WDR | NBR | AS | 85 | 130 | 10 | 788,46 |
| 117914 | | WDR | NBR | A | 85 | 130 | 10 | 751,27 |
| 19494 | | WDR | NBR | A | 85 | 130 | 12 | 751,27 |
| 18207 | | WDR | NBR | AS | 85 | 130 | 12 | 788,46 |
| 81106 | | WDR | NBR | A | 85 | 140 | 12 | 829,37 |
| 83427 | 186326 | WDR | NBR | AS | 85 | 140 | 12 | 870,28 |
| 74633 | | WDR | NBR | A | 85 | 150 | 12 | 929,78 |
| 39987 | | WDR | NBR | AS | 85 | 150 | 12 | 976,89 |

| CODICE | NUOVO CODICE | TIPO | MAT. | SPEC. | d1 mm | d2 mm | b mm | LISTINO 5-2016 X 100 € |
|---|---|---|---|---|---|---|---|---|
| 35527 | | WDR | NBR | A | 85 | 150 | 13 | 1.246,48 |
| 70516 | | WDR | NBR | B | 85 | 150 | 13 | 1.394,68 |
| 19719 | | WDR | NBR | A | 85 | 155 | 12 | 1.481,13 |
| 35550 | | WDR | NBR | A | 85,72 | 101,6 | 12,7 | 741,35 |
| 22219 | | WDR | NBR | A | 85,72 | 111,12 | 12,7 | 864,08 |
| 19977 | | WDR | NBR | A | 85,72 | 114,3 | 12,7 | 864,08 |
| 59956 | | WDR | NBR | AS | 85,72 | 117,47 | 12,7 | 907,47 |
| 20831 | | WDR | NBR | A | 85,72 | 127 | 12,7 | 1.019,04 |
| 20828 | | WDR | NBR | A | 87,31 | 114,3 | 12,7 | 864,08 |
| 83428 | | WDR | NBR | A | 88 | 105 | 12 | 817,34 |
| 18211 | | WDR | NBR | A | 88 | 110 | 12 | 550,43 |
| 25973 | | WDR | NBR | C | 88 | 110 | 13 | 1.169,05 |
| 48750 | | WDR | NBR | C | 88 | 120 | 13 | 1.319,05 |
| 18214 | | WDR | NBR | A | 88 | 126 | 12 | 1.222,42 |
| 20824 | | WDR | NBR | A | 88,9 | 104,77 | 7,93 | 741,35 |
| 59725 | | WDR | NBR | A | 88,9 | 104,77 | 9,52 | 741,35 |
| 59726 | | WDR | NBR | A | 88,9 | 107,95 | 12,7 | 741,35 |
| 21876 | | WDR | NBR | A | 88,9 | 111,12 | 9,52 | 864,08 |
| 59960 | | WDR | NBR | AS | 88,9 | 111,12 | 12,7 | 907,47 |
| 20184 | | WDR | NBR | A | 88,9 | 114,3 | 9,52 | 864,08 |
| 59961 | | WDR | NBR | AS | 88,9 | 114,3 | 9,52 | 907,47 |
| 19978 | | WDR | NBR | A | 88,9 | 114,3 | 12,7 | 864,08 |
| 21957 | | WDR | NBR | AS | 88,9 | 114,3 | 12,7 | 907,47 |
| 20829 | | WDR | NBR | A | 88,9 | 114,3 | 15,87 | 864,08 |
| 20185 | | WDR | NBR | A | 88,9 | 120,65 | 12,7 | 1.019,04 |
| 59962 | | WDR | NBR | AS | 88,9 | 120,65 | 12,7 | 1.069,87 |
| 81256 | | WDR | NBR | AS | 88,9 | 120,65 | 14,28 | 1.069,87 |
| 39235 | | WDR | NBR | B | 88,9 | 120,65 | 15,87 | 1.058,71 |
| 20186 | | WDR | NBR | A | 88,9 | 127 | 12,7 | 1.019,04 |
| 20252 | | WDR | NBR | A | 88,9 | 136,52 | 12,7 | 1.120,70 |
| 48751 | | WDR | NBR | C | 89 | 120 | 13 | 1.450,38 |
| 144064 | | WDR | NBR | AS | 90 | 105 | 13 | 634,27 |
| 74399 | | WDR | NBR | ASY | 90 | 110 | 7,5 | 983,07 |
| 19496 | | WDR | NBR | A | 90 | 110 | 8 | 550,43 |
| 18219 | | WDR | NBR | C | 90 | 110 | 8 | 1.169,05 |
| 41118 | | WDR | NBR | AO | 90 | 110 | 7 | 901,41 |
| 39989 | | WDR | NBR | A | 90 | 110 | 10 | 550,43 |
| 39988 | | WDR | NBR | AS | 90 | 110 | 10 | 622,87 |
| 18220 | | WDR | NBR | B | 90 | 110 | 10 | 795,90 |
| 18221 | | WDR | NBR | C | 90 | 110 | 10 | 1.169,05 |
| 18223 | | WDR | NBR | AS | 90 | 110 | 12 | 577,71 |
| 18222 | 184985 | WDR | NBR | A | 90 | 110 | 12 | 550,43 |
| 18224 | | WDR | NBR | B | 90 | 110 | 12 | 795,90 |
| 18225 | | WDR | NBR | C | 90 | 110 | 12 | 1.169,05 |
| 22355 | | WDR | NBR | A | 90 | 110 | 13 | 550,43 |
| 19497 | | WDR | NBR | AS | 90 | 110 | 13 | 577,71 |
| 18226 | | WDR | NBR | B | 90 | 110 | 13 | 795,90 |
| 18227 | | WDR | NBR | BS | 90 | 110 | 13 | 835,57 |
| 18228 | | WDR | NBR | C | 90 | 110 | 13 | 1.169,05 |

| CODICE | NUOVO CODICE | TIPO | MAT. | SPEC. | d1 mm | d2 mm | b mm | LISTINO 5-2016 X 100 € |
|---|---|---|---|---|---|---|---|---|
| 18229 | | WDR | NBR | CS | 90 | 110 | 13 | 1.227,32 |
| 22252 | | WDR | NBR | C | 90 | 110 | 15 | 1.169,05 |
| 19674 | | WDR | NBR | C | 90 | 112,7 | 13 | 1.319,05 |
| 27457 | | WDR | NBR | A | 90 | 115 | 9 | 675,64 |
| 18230 | | WDR | NBR | C | 90 | 115 | 9 | 1.319,05 |
| 41120 | | WDR | NBR | AS | 90 | 115 | 12 | 709,12 |
| 18232 | | WDR | NBR | A | 90 | 115 | 13 | 675,64 |
| 19498 | | WDR | NBR | AS | 90 | 115 | 13 | 709,12 |
| 40157 | | WDR | NBR | B | 90 | 115 | 13 | 979,37 |
| 18233 | | WDR | NBR | BS | 90 | 115 | 13 | 1.028,96 |
| 38711 | | WDR | NBR | C | 90 | 115 | 13 | 1.319,05 |
| 40158 | | WDR | NBR | BS | 90 | 118 | 12 | 1.028,96 |
| 72646 | 186306 | WDR | NBR | A | 90 | 120 | 10 | 665,15 |
| 18234 | | WDR | NBR | A | 90 | 120 | 12 | 675,64 |
| 19500 | | WDR | NBR | AS | 90 | 120 | 12 | 709,12 |
| 18235 | | WDR | NBR | B | 90 | 120 | 12 | 979,37 |
| 48752 | | WDR | NBR | C | 90 | 120 | 12 | 1.319,05 |
| 19501 | | WDR | NBR | A | 90 | 120 | 13 | 675,64 |
| 19502 | | WDR | NBR | AS | 90 | 120 | 13 | 709,12 |
| 18237 | | WDR | NBR | B | 90 | 120 | 13 | 979,37 |
| 18239 | | WDR | NBR | C | 90 | 120 | 13 | 1.319,05 |
| 18240 | | WDR | NBR | CS | 90 | 120 | 13 | 1.384,76 |
| 19503 | | WDR | NBR | A | 90 | 125 | 13 | 751,27 |
| 18242 | | WDR | NBR | C | 90 | 125 | 13 | 1.424,43 |
| 38445 | | WDR | NBR | A | 90 | 130 | 12 | 751,27 |
| 39995 | | WDR | NBR | AS | 90 | 130 | 12 | 866,36 |
| 18243 | | WDR | NBR | A | 90 | 130 | 13 | 751,27 |
| 121580 | | WDR | NBR | BS | 90 | 130 | 13 | 1.112,02 |
| 18244 | | WDR | NBR | C | 90 | 130 | 13 | 1.424,43 |
| 56970 | | WDR | NBR | CS | 90 | 130 | 13 | 1.495,09 |
| 19504 | | WDR | NBR | A | 90 | 140 | 13 | 828,83 |
| 131077 | | WDR | NBR | AS | 90 | 140 | 13 | 870,28 |
| 18245 | | WDR | NBR | C | 90 | 140 | 13 | 1.557,08 |
| 35316 | | WDR | NBR | A | 90 | 160 | 12 | 1.100,86 |
| 187774 | | WDR | NBR | A | 92 | 120 | 12 | 1.189,00 |
| 18699 | | WDR | NBR | A | 92 | 120 | 13 | 675,64 |
| 18248 | | WDR | NBR | C | 92 | 120 | 13 | 1.319,05 |
| 37928 | | WDR | NBR | AS | 92,07 | 111,12 | 11,11 | 907,47 |
| 20187 | | WDR | NBR | A | 92,07 | 114,3 | 12,7 | 864,08 |
| 59963 | | WDR | NBR | AS | 92,07 | 114,3 | 12,7 | 907,47 |
| 35502 | | WDR | NBR | A | 92,07 | 117,47 | 12,7 | 864,08 |
| 20188 | | WDR | NBR | A | 92,07 | 120,65 | 12,7 | 1.019,04 |
| 18250 | | WDR | NBR | B | 95 | 110 | 9 | 795,90 |
| 38446 | | WDR | NBR | A | 95 | 110 | 10 | 550,43 |
| 500912 | | WDR | NBR | AS | 95 | 110 | 10 | 577,96 |
| 117855 | | WDR | NBR | BS | 95 | 110 | 10 | 835,57 |
| 18253 | | WDR | NBR | C | 95 | 110 | 10 | 1.169,05 |
| 18254 | | WDR | NBR | A | 95 | 110 | 12 | 550,43 |
| 40001 | | WDR | NBR | AS | 95 | 110 | 12 | 577,71 |

| CODICE | NUOVO CODICE | TIPO | MAT. | SPEC. | d1 mm | d2 mm | b mm | LISTINO 5-2016 X 100 € |
|---|---|---|---|---|---|---|---|---|
| 18258 | | WDR | NBR | C | 95 | 110 | 13 | 1.169,05 |
| 34363 | | WDR | NBR | C | 95 | 115 | 10 | 1.319,05 |
| 19509 | | WDR | NBR | A | 95 | 115 | 11 | 972,86 |
| 19510 | | WDR | NBR | AS | 95 | 115 | 12 | 709,12 |
| 18259 | | WDR | NBR | A | 95 | 115 | 13 | 688,28 |
| 18260 | | WDR | NBR | AS | 95 | 115 | 13 | 709,12 |
| 18261 | | WDR | NBR | B | 95 | 115 | 13 | 979,37 |
| 18262 | | WDR | NBR | C | 95 | 115 | 13 | 1.319,05 |
| 18263 | | WDR | NBR | AS | 95 | 120 | 10 | 709,43 |
| 18264 | | WDR | NBR | A | 95 | 120 | 12 | 675,64 |
| 18265 | 185516 | WDR | NBR | AS | 95 | 120 | 12 | 709,12 |
| 92212 | | WDR | NBR | C | 95 | 120 | 12 | 1.319,05 |
| 118704 | | WDR | NBR | ASY | 95 | 120 | 12 | 1.182,69 |
| 18267 | | WDR | NBR | A | 95 | 120 | 13 | 831,58 |
| 19511 | | WDR | NBR | AS | 95 | 120 | 13 | 709,12 |
| 18268 | | WDR | NBR | B | 95 | 120 | 13 | 979,37 |
| 42812 | | WDR | NBR | BS | 95 | 120 | 13 | 1.028,96 |
| 18269 | | WDR | NBR | C | 95 | 120 | 13 | 1.319,05 |
| 20851 | | WDR | NBR | CS | 95 | 120 | 13 | 1.384,76 |
| 60186 | | WDR | NBR | C | 95 | 120 | 15 | 1.319,05 |
| 25879 | | WDR | NBR | AS | 95 | 125 | 12 | 788,46 |
| 18270 | | WDR | NBR | A | 95 | 125 | 12 | 751,27 |
| 18271 | | WDR | NBR | B | 95 | 125 | 12 | 1.058,71 |
| 48756 | | WDR | NBR | CS | 95 | 125 | 12 | 1.495,09 |
| 18273 | | WDR | NBR | B | 95 | 125 | 13 | 1.058,71 |
| 18274 | | WDR | NBR | C | 95 | 125 | 13 | 1.424,43 |
| 41440 | | WDR | NBR | C | 95 | 125 | 15 | 1.424,43 |
| 131000 | | WDR | NBR | AS | 95 | 130 | 8 | 788,46 |
| 37596 | | WDR | NBR | A | 95 | 130 | 12 | 751,27 |
| 38760 | | WDR | NBR | AS | 95 | 130 | 12 | 788,46 |
| 40003 | | WDR | NBR | AS | 95 | 130 | 13 | 788,46 |
| 18277 | | WDR | NBR | C | 95 | 130 | 13 | 1.424,43 |
| 18279 | | WDR | NBR | A | 95 | 136 | 13 | 1.460,16 |
| 59485 | | WDR | NBR | A | 95 | 145 | 13 | 1.120,19 |
| 18281 | | WDR | NBR | A | 95 | 160 | 15 | 1.398,01 |
| 167493 | | WDR | NBR | AS | 95 | 170 | 13 | 1.280,64 |
| 20189 | | WDR | NBR | A | 95,25 | 114,3 | 12,7 | 864,08 |
| 59969 | | WDR | NBR | AS | 95,25 | 114,3 | 12,7 | 907,47 |
| 19979 | | WDR | NBR | A | 95,25 | 120,65 | 12,7 | 1.019,04 |
| 59971 | | WDR | NBR | AS | 95,25 | 120,65 | 12,7 | 1.069,87 |
| 19868 | | WDR | NBR | A | 95,25 | 133,35 | 12,7 | 1.120,70 |
| 56011 | | WDR | NBR | A | 95,25 | 136,52 | 11,11 | 1.120,70 |
| 36956 | | WDR | NBR | A | 96,83 | 123,82 | 12,7 | 1.019,04 |
| 187775 | | WDR | NBR | A | 97 | 120 | 13 | 1.189,00 |
| 18284 | | WDR | NBR | A | 98 | 120 | 13 | 675,64 |
| 144066 | | WDR | NBR | AS | 98 | 120 | 13 | 923,90 |
| 48758 | | WDR | NBR | C | 98 | 125 | 13 | 1.424,43 |
| 27681 | | WDR | NBR | B | 98 | 130 | 13 | 1.058,71 |
| 21952 | | WDR | NBR | A | 98,42 | 123,82 | 12,7 | 1.019,04 |

| CODICE | NUOVO CODICE | TIPO | MAT. | SPEC. | d1 mm | d2 mm | b mm | LISTINO 5-2016 X 100 € |
|---|---|---|---|---|---|---|---|---|
| 20190 | | WDR | NBR | A | 98,42 | 127 | 12,7 | 1.019,04 |
| 59974 | | WDR | NBR | AS | 98,42 | 127 | 12,7 | 1.069,87 |
| 20191 | | WDR | NBR | A | 98,42 | 133,35 | 12,7 | 1.120,70 |
| 18286 | 184986 | WDR | NBR | A | 100 | 115 | 9 | 675,64 |
| 18287 | | WDR | NBR | B | 100 | 115 | 9 | 979,37 |
| 19154 | | WDR | NBR | AS | 100 | 116 | 12 | 1.056,58 |
| 118705 | | WDR | NBR | ASY | 100 | 120 | 7,5 | 1.182,69 |
| 187776 | | WDR | NBR | A | 100 | 120 | 8 | 1.189,00 |
| 18288 | | WDR | NBR | A | 100 | 120 | 10 | 675,64 |
| 186201 | | WDR | NBR | AS | 100 | 120 | 10 | 739,94 |
| 18289 | | WDR | NBR | B | 100 | 120 | 10 | 979,37 |
| 18290 | | WDR | NBR | C | 100 | 120 | 10 | 1.319,05 |
| 18291 | | WDR | NBR | A | 100 | 120 | 12 | 675,64 |
| 19516 | | WDR | NBR | AS | 100 | 120 | 12 | 709,12 |
| 19671 | | WDR | NBR | B | 100 | 120 | 12 | 979,37 |
| 60188 | | WDR | NBR | BS | 100 | 120 | 12 | 1.028,96 |
| 38710 | | WDR | NBR | C | 100 | 120 | 12 | 1.319,05 |
| 19517 | 185853 | WDR | NBR | A | 100 | 120 | 13 | 675,64 |
| 36623 | | WDR | NBR | B | 100 | 120 | 13 | 979,37 |
| 60333 | | WDR | NBR | BS | 100 | 120 | 13 | 1.028,96 |
| 18292 | | WDR | NBR | C | 100 | 120 | 13 | 1.319,05 |
| 40009 | | WDR | NBR | A | 100 | 125 | 10 | 1.143,24 |
| 18293 | | WDR | NBR | A | 100 | 125 | 12 | 751,27 |
| 19518 | | WDR | NBR | AS | 100 | 125 | 12 | 788,46 |
| 18294 | | WDR | NBR | B | 100 | 125 | 12 | 1.058,71 |
| 19519 | | WDR | NBR | A | 100 | 125 | 13 | 751,27 |
| 18295 | | WDR | NBR | B | 100 | 125 | 13 | 1.058,71 |
| 40165 | | WDR | NBR | BS | 100 | 125 | 13 | 1.112,02 |
| 67999 | | WDR | NBR | CS | 100 | 125 | 13 | 1.495,09 |
| 18298 | | WDR | NBR | A | 100 | 130 | 12 | 751,27 |
| 19521 | 185040 | WDR | NBR | AS | 100 | 130 | 12 | 788,46 |
| 19522 | | WDR | NBR | B | 100 | 130 | 12 | 1.058,71 |
| 18299 | 185517 | WDR | NBR | A | 100 | 130 | 13 | 751,27 |
| 18300 | | WDR | NBR | B | 100 | 130 | 13 | 1.058,71 |
| 55974 | | WDR | NBR | BS | 100 | 130 | 13 | 1.112,02 |
| 18301 | | WDR | NBR | C | 100 | 130 | 13 | 1.424,43 |
| 87165 | | WDR | NBR | CS | 100 | 130 | 13 | 1.424,43 |
| 83429 | 186327 | WDR | NBR | A | 100 | 130 | 14 | 892,59 |
| 74272 | | WDR | NBR | BS | 100 | 130 | 15 | 1.112,02 |
| 19673 | | WDR | NBR | C | 100 | 130 | 15 | 1.424,43 |
| 39067 | | WDR | NBR | CS | 100 | 130 | 15 | 1.495,09 |
| 19525 | | WDR | NBR | A | 100 | 140 | 12 | 829,37 |
| 40012 | | WDR | NBR | AS | 100 | 140 | 12 | 870,83 |
| 18302 | 185518 | WDR | NBR | A | 100 | 140 | 13 | 829,37 |
| 40013 | | WDR | NBR | AS | 100 | 140 | 13 | 937,22 |
| 18303 | | WDR | NBR | C | 100 | 140 | 13 | 1.557,08 |
| 117915 | | WDR | NBR | A | 100 | 150 | 12 | 909,90 |
| 107334 | | WDR | NBR | AS | 100 | 150 | 12 | 955,39 |
| 61398 | | WDR | NBR | B | 100 | 150 | 12 | 1.394,68 |

| CODICE | NUOVO CODICE | TIPO | MAT. | SPEC. | d1 mm | d2 mm | b mm | LISTINO 5-2016 X 100 € |
|---|---|---|---|---|---|---|---|---|
| 18304 | | WDR | NBR | A | 100 | 150 | 13 | 929,78 |
| 75071 | | WDR | NBR | AS | 100 | 150 | 13 | 976,89 |
| 70888 | | WDR | NBR | B | 100 | 150 | 13 | 1.394,68 |
| 52481 | | WDR | NBR | A | 100 | 160 | 12 | 1.100,86 |
| 48760 | | WDR | NBR | C | 100 | 160 | 15 | 1.981,06 |
| 35528 | | WDR | NBR | A | 100 | 180 | 13 | 1.351,29 |
| 20830 | | WDR | NBR | A | 101,6 | 120,65 | 12,7 | 1.019,04 |
| 59979 | | WDR | NBR | AS | 101,6 | 130,17 | 12,7 | 1.176,49 |
| 20193 | | WDR | NBR | A | 101,6 | 133,35 | 12,7 | 1.120,70 |
| 20883 | | WDR | NBR | A | 101,6 | 133,35 | 15,87 | 1.120,70 |
| 48762 | | WDR | NBR | C | 101,6 | 136,68 | 11,13 | 1.557,08 |
| 20194 | | WDR | NBR | A | 101,6 | 139,7 | 12,7 | 1.120,70 |
| 52513 | | WDR | NBR | AS | 102 | 115 | 10 | 709,12 |
| 22839 | | WDR | NBR | C | 102 | 125 | 13 | 1.424,43 |
| 57183 | | WDR | NBR | A | 102 | 127 | 7,93 | 1.019,04 |
| 20192 | | WDR | NBR | A | 102 | 127 | 9,52 | 1.019,04 |
| 37201 | | WDR | NBR | CS | 102 | 127 | 12,7 | 1.495,09 |
| 19980 | | WDR | NBR | A | 102 | 127 | 12,7 | 1.019,04 |
| 24260 | | WDR | NBR | AS | 102 | 127 | 12,7 | 1.069,87 |
| 48764 | | WDR | NBR | C | 102 | 130 | 13 | 1.371,88 |
| 18305 | | WDR | NBR | C | 103 | 125 | 13 | 1.424,43 |
| 52490 | | WDR | NBR | A | 104 | 130 | 10 | 751,27 |
| 21009 | | WDR | NBR | A | 104,77 | 127 | 12,7 | 1.019,04 |
| 20832 | | WDR | NBR | A | 104,77 | 130,17 | 12,7 | 1.120,70 |
| 75014 | | WDR | NBR | B | 105 | 120 | 7 | 979,37 |
| 72782 | | WDR | NBR | C | 105 | 120 | 15 | 1.319,05 |
| 19526 | | WDR | NBR | A | 105 | 125 | 10 | 751,27 |
| 18306 | | WDR | NBR | B | 105 | 125 | 10 | 1.058,71 |
| 18308 | | WDR | NBR | A | 105 | 125 | 13 | 751,27 |
| 19528 | | WDR | NBR | AS | 105 | 125 | 13 | 788,46 |
| 18309 | | WDR | NBR | B | 105 | 125 | 13 | 1.058,71 |
| 18310 | | WDR | NBR | C | 105 | 125 | 13 | 1.424,43 |
| 18663 | | WDR | NBR | AS | 105 | 130 | 12 | 788,46 |
| 18311 | | WDR | NBR | A | 105 | 130 | 12 | 751,27 |
| 18312 | | WDR | NBR | B | 105 | 130 | 12 | 1.058,71 |
| 19530 | | WDR | NBR | A | 105 | 130 | 13 | 751,27 |
| 19531 | | WDR | NBR | AS | 105 | 130 | 13 | 788,46 |
| 36624 | | WDR | NBR | B | 105 | 130 | 13 | 1.058,71 |
| 60191 | | WDR | NBR | BS | 105 | 130 | 13 | 1.112,02 |
| 18313 | 185519 | WDR | NBR | C | 105 | 130 | 13 | 1.424,43 |
| 38447 | | WDR | NBR | A | 105 | 130 | 15 | 751,27 |
| 18314 | | WDR | NBR | C | 105 | 130 | 15 | 1.424,43 |
| 42823 | | WDR | NBR | BS | 105 | 135 | 14 | 1.233,51 |
| 41148 | | WDR | NBR | AS | 105 | 135 | 15 | 870,28 |
| 18316 | | WDR | NBR | A | 105 | 140 | 12 | 829,37 |
| 40020 | | WDR | NBR | AS | 105 | 140 | 12 | 870,28 |
| 18317 | | WDR | NBR | B | 105 | 140 | 12 | 1.175,25 |
| 40021 | | WDR | NBR | AS | 105 | 140 | 13 | 942,18 |
| 18320 | | WDR | NBR | C | 105 | 140 | 13 | 1.557,08 |

| CODICE | NUOVO CODICE | TIPO | MAT. | SPEC. | d1 mm | d2 mm | b mm | LISTINO 5-2016 X 100 € |
|---|---|---|---|---|---|---|---|---|
| 19653 | | WDR | NBR | CS | 105 | 140 | 13 | 1.557,08 |
| 18322 | | WDR | NBR | B | 105 | 145 | 13 | 1.394,68 |
| 40168 | | WDR | NBR | B | 105 | 145 | 15 | 1.394,68 |
| 40421 | | WDR | NBR | C | 105 | 150 | 15 | 2.026,59 |
| 163176 | | WDR | NBR | AS | 105 | 160 | 12 | 1.090,56 |
| 21951 | | WDR | NBR | A | 106,36 | 133,35 | 12,7 | 1.120,70 |
| 20195 | | WDR | NBR | A | 107,95 | 127 | 12,7 | 1.019,04 |
| 19981 | | WDR | NBR | A | 107,95 | 133,35 | 12,7 | 1.120,70 |
| 59981 | | WDR | NBR | AS | 107,95 | 133,35 | 12,7 | 1.176,49 |
| 20196 | | WDR | NBR | A | 107,95 | 136,52 | 12,7 | 1.120,70 |
| 20197 | | WDR | NBR | A | 107,95 | 139,7 | 12,7 | 1.120,70 |
| 59982 | | WDR | NBR | AS | 107,95 | 139,7 | 12,7 | 1.176,49 |
| 21026 | | WDR | NBR | A | 107,95 | 142,87 | 12,7 | 1.212,44 |
| 27066 | | WDR | NBR | A | 107,95 | 146,05 | 11,11 | 1.212,44 |
| 20198 | | WDR | NBR | A | 107,95 | 152,4 | 14,28 | 1.321,53 |
| 38503 | | WDR | NBR | C | 108 | 130 | 13 | 1.424,43 |
| 83476 | | WDR | NBR | C | 108 | 140 | 13 | 1.635,18 |
| 118455 | | WDR | NBR | ASY | 109,59 | 158,75 | 10 | 1.817,42 |
| 41153 | | WDR | NBR | A | 110 | 125 | 12 | 847,87 |
| 38677 | | WDR | NBR | B | 110 | 128 | 9 | 1.058,71 |
| 18326 | | WDR | NBR | C | 110 | 128 | 9 | 1.424,43 |
| 38448 | | WDR | NBR | A | 110 | 130 | 8 | 843,00 |
| 68272 | | WDR | NBR | A | 110 | 130 | 10 | 777,54 |
| 19534 | | WDR | NBR | AS | 110 | 130 | 12 | 788,46 |
| 18327 | | WDR | NBR | A | 110 | 130 | 12 | 751,27 |
| 18328 | | WDR | NBR | B | 110 | 130 | 12 | 1.058,71 |
| 38504 | | WDR | NBR | C | 110 | 130 | 12 | 1.424,43 |
| 19535 | 185854 | WDR | NBR | A | 110 | 130 | 13 | 751,27 |
| 44291 | | WDR | NBR | B | 110 | 130 | 13 | 1.058,71 |
| 18330 | | WDR | NBR | C | 110 | 130 | 13 | 1.424,43 |
| 19654 | | WDR | NBR | C | 110 | 130 | 15 | 1.424,43 |
| 26424 | | WDR | NBR | A | 110 | 135 | 12 | 829,37 |
| 18331 | | WDR | NBR | A | 110 | 135 | 13 | 1.098,27 |
| 40026 | | WDR | NBR | AS | 110 | 135 | 13 | 1.153,17 |
| 18332 | | WDR | NBR | C | 110 | 135 | 13 | 1.557,08 |
| 38741 | | WDR | NBR | CS | 110 | 135 | 13 | 1.635,18 |
| 56984 | | WDR | NBR | A | 110 | 140 | 10 | 829,37 |
| 18333 | | WDR | NBR | A | 110 | 140 | 12 | 829,37 |
| 27500 | | WDR | NBR | AS | 110 | 140 | 12 | 870,28 |
| 18334 | | WDR | NBR | B | 110 | 140 | 12 | 1.175,25 |
| 83477 | | WDR | NBR | C | 110 | 140 | 12 | 1.557,08 |
| 18335 | | WDR | NBR | A | 110 | 140 | 13 | 829,37 |
| 35013 | | WDR | NBR | AS | 110 | 140 | 13 | 870,83 |
| 18336 | | WDR | NBR | B | 110 | 140 | 13 | 1.175,25 |
| 40132 | | WDR | NBR | BS | 110 | 140 | 13 | 1.233,51 |
| 18337 | | WDR | NBR | C | 110 | 140 | 13 | 1.557,08 |
| 18338 | | WDR | NBR | CS | 110 | 140 | 13 | 1.635,18 |
| 18339 | | WDR | NBR | C | 110 | 140 | 15 | 1.574,12 |
| 27464 | | WDR | NBR | C | 110 | 145 | 13 | 1.743,04 |

| CODICE | NUOVO CODICE | TIPO | MAT. | SPEC. | d1 mm | d2 mm | b mm | LISTINO 5-2016 X 100 € |
|---|---|---|---|---|---|---|---|---|
| 118706 | | WDR | NBR | ASY | 110 | 150 | 8 | 1.678,57 |
| 151982 | | WDR | NBR | A | 110 | 150 | 12 | 1.276,00 |
| 18341 | | WDR | NBR | A | 110 | 150 | 13 | 929,78 |
| 40029 | | WDR | NBR | AS | 110 | 150 | 13 | 976,28 |
| 19655 | | WDR | NBR | BS | 110 | 150 | 13 | 1.464,10 |
| 18342 | | WDR | NBR | C | 110 | 150 | 13 | 1.743,04 |
| 38505 | | WDR | NBR | C | 110 | 150 | 15 | 1.743,03 |
| 83478 | | WDR | NBR | C | 110 | 152 | 15 | 1.981,06 |
| 41167 | | WDR | NBR | AS | 110 | 160 | 12 | 1.318,08 |
| 40031 | | WDR | NBR | AS | 110 | 200 | 13 | 1.933,95 |
| 20199 | | WDR | NBR | A | 111,12 | 136,52 | 12,7 | 1.120,70 |
| 20200 | | WDR | NBR | A | 111,12 | 139,7 | 12,7 | 1.120,70 |
| 21566 | | WDR | NBR | B | 112 | 130 | 8 | 1.058,71 |
| 18346 | | WDR | NBR | A | 112 | 140 | 13 | 1.319,30 |
| 21098 | | WDR | NBR | C | 112 | 140 | 13 | 1.557,08 |
| 20833 | | WDR | NBR | A | 114,3 | 133,35 | 11,11 | 1.120,70 |
| 20834 | | WDR | NBR | A | 114,3 | 136,52 | 11,11 | 1.120,70 |
| 20202 | | WDR | NBR | A | 114,3 | 139,7 | 9,52 | 1.120,70 |
| 19982 | | WDR | NBR | A | 114,3 | 139,7 | 12,7 | 1.120,70 |
| 59988 | | WDR | NBR | AS | 114,3 | 139,7 | 12,7 | 1.176,49 |
| 20857 | | WDR | NBR | A | 114,3 | 142,87 | 12,7 | 1.212,44 |
| 20203 | | WDR | NBR | A | 114,3 | 146,05 | 12,7 | 1.212,44 |
| 44486 | | WDR | NBR | AS | 114,3 | 155,57 | 14,28 | 1.388,48 |
| 18348 | | WDR | NBR | A | 115 | 130 | 12 | 751,27 |
| 187778 | | WDR | NBR | A | 115 | 135 | 13 | 1.463,38 |
| 27685 | | WDR | NBR | B | 115 | 135 | 13 | 1.175,25 |
| 41170 | | WDR | NBR | AS | 115 | 135 | 14 | 1.012,64 |
| 38450 | | WDR | NBR | A | 115 | 140 | 10 | 942,18 |
| 18350 | | WDR | NBR | A | 115 | 140 | 12 | 829,37 |
| 38471 | | WDR | NBR | AS | 115 | 140 | 12 | 870,28 |
| 18351 | | WDR | NBR | B | 115 | 140 | 12 | 1.175,25 |
| 18352 | | WDR | NBR | C | 115 | 140 | 12 | 1.557,08 |
| 18353 | | WDR | NBR | A | 115 | 140 | 13 | 829,37 |
| 34841 | 186054 | WDR | NBR | AS | 115 | 140 | 13 | 870,28 |
| 18354 | | WDR | NBR | B | 115 | 140 | 13 | 1.175,25 |
| 18355 | | WDR | NBR | C | 115 | 140 | 13 | 1.557,08 |
| 20756 | | WDR | NBR | CS | 115 | 140 | 13 | 1.635,18 |
| 38678 | | WDR | NBR | B | 115 | 140 | 15 | 1.175,25 |
| 18356 | | WDR | NBR | C | 115 | 140 | 15 | 1.557,08 |
| 18358 | | WDR | NBR | A | 115 | 150 | 12 | 929,78 |
| 36549 | | WDR | NBR | AS | 115 | 150 | 12 | 976,89 |
| 39254 | | WDR | NBR | AS | 115 | 150 | 13 | 1.458,26 |
| 18360 | | WDR | NBR | C | 115 | 150 | 13 | 1.743,04 |
| 18361 | 185520 | WDR | NBR | C | 115 | 150 | 15 | 1.743,04 |
| 83324 | | WDR | NBR | CS | 115 | 150 | 15 | 1.829,82 |
| 40416 | | WDR | NBR | C | 115 | 160 | 15 | 1.770,31 |
| 25985 | | WDR | NBR | A | 117,47 | 142,87 | 12,7 | 1.212,44 |
| 35927 | | WDR | NBR | C | 117,47 | 146,05 | 14,28 | 1.743,04 |
| 35399 | | WDR | NBR | A | 117,47 | 146,05 | 14,28 | 1.212,44 |

| CODICE | NUOVO CODICE | TIPO | MAT. | SPEC. | d1 mm | d2 mm | b mm | LISTINO 5-2016 X 100 € |
|---|---|---|---|---|---|---|---|---|
| 38619 | | WDR | NBR | CS | 117,47 | 152,4 | 12,7 | 2.080,24 |
| 18363 | | WDR | NBR | B | 118 | 136 | 13 | 1.175,25 |
| 48770 | | WDR | NBR | CS | 118 | 150 | 12 | 1.829,82 |
| 118707 | | WDR | NBR | ASY | 120 | 140 | 7,5 | 1.543,44 |
| 26457 | | WDR | NBR | A | 120 | 140 | 10 | 1.021,24 |
| 118708 | | WDR | NBR | ASY | 120 | 140 | 10 | 1.543,44 |
| 38507 | | WDR | NBR | C | 120 | 140 | 10 | 1.557,08 |
| 44244 | 186228 | WDR | NBR | A | 120 | 140 | 12 | 829,37 |
| 18364 | 185521 | WDR | NBR | A | 120 | 140 | 13 | 829,37 |
| 18365 | | WDR | NBR | B | 120 | 140 | 13 | 1.175,25 |
| 38695 | | WDR | NBR | BS | 120 | 140 | 13 | 1.233,51 |
| 18366 | | WDR | NBR | C | 120 | 140 | 13 | 1.557,08 |
| 19542 | | WDR | NBR | A | 120 | 145 | 12 | 1.564,04 |
| 187779 | | WDR | NBR | A | 120 | 145 | 15 | 1.564,04 |
| 56009 | | WDR | NBR | BS | 120 | 145 | 15 | 1.464,10 |
| 38709 | | WDR | NBR | C | 120 | 145 | 15 | 1.957,36 |
| 18367 | | WDR | NBR | A | 120 | 150 | 12 | 929,78 |
| 38472 | | WDR | NBR | AS | 120 | 150 | 12 | 976,89 |
| 18368 | | WDR | NBR | B | 120 | 150 | 12 | 1.394,68 |
| 38696 | | WDR | NBR | BS | 120 | 150 | 12 | 1.464,10 |
| 40414 | | WDR | NBR | C | 120 | 150 | 12 | 1.743,04 |
| 18369 | 185522 | WDR | NBR | A | 120 | 150 | 13 | 929,78 |
| 40040 | | WDR | NBR | AS | 120 | 150 | 13 | 976,27 |
| 18370 | | WDR | NBR | B | 120 | 150 | 13 | 1.394,68 |
| 40138 | | WDR | NBR | BS | 120 | 150 | 13 | 1.464,10 |
| 18371 | | WDR | NBR | C | 120 | 150 | 13 | 1.743,04 |
| 38473 | | WDR | NBR | AS | 120 | 150 | 15 | 976,89 |
| 19658 | | WDR | NBR | B | 120 | 150 | 15 | 1.394,68 |
| 18372 | | WDR | NBR | C | 120 | 150 | 15 | 1.743,04 |
| 38742 | | WDR | NBR | CS | 120 | 150 | 15 | 1.829,82 |
| 83480 | | WDR | NBR | C | 120 | 152 | 16 | 1.981,06 |
| 18686 | | WDR | NBR | A | 120 | 160 | 12 | 1.100,86 |
| 37181 | | WDR | NBR | AS | 120 | 160 | 12 | 982,57 |
| 26037 | | WDR | NBR | B | 120 | 160 | 12 | 1.581,87 |
| 18373 | | WDR | NBR | A | 120 | 160 | 13 | 1.100,86 |
| 18374 | | WDR | NBR | C | 120 | 160 | 13 | 1.981,06 |
| 18375 | | WDR | NBR | A | 120 | 160 | 15 | 1.100,86 |
| 38247 | | WDR | NBR | AS | 120 | 160 | 15 | 1.140,01 |
| 18376 | | WDR | NBR | C | 120 | 160 | 15 | 1.981,06 |
| 40413 | | WDR | NBR | C | 120 | 170 | 15 | 2.308,34 |
| 128141 | | WDR | NBR | AS | 120 | 180 | 15 | 1.400,81 |
| 20856 | | WDR | NBR | A | 120,65 | 139,7 | 9,52 | 1.120,70 |
| 20204 | | WDR | NBR | A | 120,65 | 146,05 | 12,7 | 1.212,44 |
| 59994 | | WDR | NBR | AS | 120,65 | 146,05 | 12,7 | 1.212,44 |
| 60610 | | WDR | NBR | B | 120,65 | 152,4 | 14,28 | 1.581,87 |
| 59996 | | WDR | NBR | AS | 120,65 | 152,4 | 14,28 | 1.388,48 |
| 18377 | | WDR | NBR | A | 122 | 150 | 15 | 1.198,20 |
| 48772 | | WDR | NBR | C | 124 | 150 | 15 | 1.743,04 |
| 38451 | | WDR | NBR | A | 125 | 140 | 10 | 829,37 |

| CODICE | NUOVO CODICE | TIPO | MAT. | SPEC. | d1 mm | d2 mm | b mm | LISTINO 5-2016 X 100 € |
|---|---|---|---|---|---|---|---|---|
| 38132 | | WDR | NBR | AS | 125 | 143 | 13 | 976,89 |
| 18378 | | WDR | NBR | A | 125 | 150 | 12 | 929,78 |
| 38474 | | WDR | NBR | AS | 125 | 150 | 12 | 976,89 |
| 38679 | | WDR | NBR | B | 125 | 150 | 12 | 1.394,68 |
| 38249 | | WDR | NBR | C | 125 | 150 | 12 | 1.743,04 |
| 19659 | | WDR | NBR | B | 125 | 150 | 13 | 1.394,68 |
| 18379 | | WDR | NBR | BS | 125 | 150 | 13 | 1.464,10 |
| 18380 | | WDR | NBR | C | 125 | 150 | 13 | 1.743,04 |
| 38743 | | WDR | NBR | CS | 125 | 150 | 13 | 1.829,82 |
| 18381 | | WDR | NBR | A | 125 | 150 | 15 | 929,78 |
| 38708 | | WDR | NBR | C | 125 | 150 | 15 | 1.743,04 |
| 20217 | | WDR | NBR | C | 125 | 152 | 15 | 1.981,06 |
| 38452 | | WDR | NBR | A | 125 | 155 | 12 | 1.100,86 |
| 38475 | | WDR | NBR | AS | 125 | 155 | 12 | 1.155,41 |
| 18687 | | WDR | NBR | A | 125 | 160 | 12 | 1.100,86 |
| 40048 | | WDR | NBR | AS | 125 | 160 | 12 | 1.155,41 |
| 81884 | | WDR | NBR | B | 125 | 160 | 12 | 1.581,87 |
| 44257 | | WDR | NBR | A | 125 | 160 | 13 | 1.100,86 |
| 18382 | | WDR | NBR | C | 125 | 160 | 13 | 1.981,06 |
| 18384 | | WDR | NBR | C | 125 | 160 | 15 | 1.981,06 |
| 38744 | | WDR | NBR | CS | 125 | 160 | 15 | 2.080,24 |
| 38707 | | WDR | NBR | C | 125 | 170 | 13 | 2.308,34 |
| 18385 | | WDR | NBR | C | 125 | 170 | 15 | 2.308,34 |
| 35400 | | WDR | NBR | A | 125,41 | 152,4 | 12,7 | 1.321,53 |
| 59729 | | WDR | NBR | A | 127 | 146,05 | 11,11 | 1.212,44 |
| 20206 | | WDR | NBR | A | 127 | 146,05 | 12,7 | 1.212,44 |
| 19984 | | WDR | NBR | A | 127 | 152,4 | 12,7 | 1.321,53 |
| 59998 | | WDR | NBR | AS | 127 | 152,4 | 12,7 | 1.388,48 |
| 59730 | | WDR | NBR | A | 127 | 152,4 | 14,28 | 1.321,53 |
| 43083 | | WDR | NBR | C | 127 | 158,75 | 14,28 | 1.981,06 |
| 48491 | | WDR | NBR | C | 127 | 158,75 | 15,87 | 1.981,06 |
| 60000 | | WDR | NBR | AS | 127 | 165,1 | 12,7 | 1.612,87 |
| 27680 | | WDR | NBR | A | 128 | 150 | 13 | 929,78 |
| 40170 | | WDR | NBR | B | 128 | 150 | 15 | 1.394,68 |
| 118709 | | WDR | NBR | ASY | 130 | 150 | 7,5 | 1.678,57 |
| 38453 | | WDR | NBR | A | 130 | 150 | 10 | 929,78 |
| 44888 | | WDR | NBR | AS | 130 | 150 | 10 | 1.115,19 |
| 43085 | | WDR | NBR | B | 130 | 150 | 10 | 1.394,68 |
| 38476 | | WDR | NBR | AS | 130 | 150 | 12 | 976,89 |
| 39052 | | WDR | NBR | BS | 130 | 150 | 14 | 1.464,10 |
| 56732 | | WDR | NBR | C | 130 | 150 | 14 | 1.743,04 |
| 83451 | | WDR | NBR | AS | 130 | 150 | 15 | 976,89 |
| 36925 | | WDR | NBR | C | 130 | 155 | 10 | 1.981,06 |
| 38745 | | WDR | NBR | CS | 130 | 155 | 10 | 2.080,24 |
| 83483 | | WDR | NBR | C | 130 | 155 | 12 | 1.981,06 |
| 38864 | 185087 | WDR | NBR | AS | 130 | 160 | 12 | 1.155,41 |
| 18388 | | WDR | NBR | A | 130 | 160 | 12 | 1.100,86 |
| 18389 | | WDR | NBR | B | 130 | 160 | 12 | 1.581,87 |
| 22356 | | WDR | NBR | A | 130 | 160 | 13 | 1.100,86 |

| CODICE | NUOVO CODICE | TIPO | MAT. | SPEC. | d1 mm | d2 mm | b mm | LISTINO 5-2016 X 100 € |
|---|---|---|---|---|---|---|---|---|
| 185719 | | WDR | NBR | AS | 130 | 160 | 13 | 1.005,12 |
| 44292 | | WDR | NBR | B | 130 | 160 | 13 | 1.581,87 |
| 37111 | | WDR | NBR | BS | 130 | 160 | 13 | 1.661,21 |
| 18390 | | WDR | NBR | C | 130 | 160 | 13 | 1.981,06 |
| 19545 | | WDR | NBR | AS | 130 | 160 | 14 | 1.155,93 |
| 18391 | | WDR | NBR | A | 130 | 160 | 15 | 1.100,86 |
| 19546 | | WDR | NBR | AS | 130 | 160 | 15 | 1.155,92 |
| 40171 | | WDR | NBR | B | 130 | 160 | 15 | 1.581,87 |
| 18392 | | WDR | NBR | C | 130 | 160 | 15 | 1.981,06 |
| 22220 | | WDR | NBR | CS | 130 | 160 | 15 | 2.080,24 |
| 79318 | | WDR | NBR | B | 130 | 160 | 16 | 1.581,87 |
| 40055 | | WDR | NBR | A | 130 | 165 | 13 | 1.842,44 |
| 40450 | | WDR | NBR | C | 130 | 165 | 13 | 2.308,34 |
| 44258 | | WDR | NBR | A | 130 | 165 | 15 | 1.445,77 |
| 18393 | | WDR | NBR | A | 130 | 170 | 12 | 1.242,19 |
| 22357 | | WDR | NBR | A | 130 | 170 | 13 | 1.242,19 |
| 18394 | | WDR | NBR | C | 130 | 170 | 13 | 2.308,34 |
| 18395 | | WDR | NBR | A | 130 | 170 | 15 | 1.313,32 |
| 21953 | | WDR | NBR | CS | 130 | 170 | 15 | 2.423,64 |
| 18396 | | WDR | NBR | B | 130 | 180 | 15 | 1.839,73 |
| 18397 | | WDR | NBR | C | 130 | 180 | 15 | 2.644,31 |
| 26454 | | WDR | NBR | A | 130,17 | 155,57 | 12,7 | 1.321,53 |
| 60181 | | WDR | NBR | C | 130,17 | 161,92 | 12,7 | 2.308,34 |
| 38706 | | WDR | NBR | C | 132 | 160 | 13 | 1.981,06 |
| 40174 | | WDR | NBR | B | 133,35 | 155,57 | 14,28 | 1.581,87 |
| 77867 | | WDR | NBR | C | 133,35 | 158,75 | 12,7 | 1.981,06 |
| 36628 | | WDR | NBR | A | 133,35 | 158,75 | 12,7 | 1.321,53 |
| 60002 | | WDR | NBR | AS | 133,35 | 158,75 | 12,7 | 1.388,48 |
| 20208 | | WDR | NBR | A | 133,35 | 165,1 | 14,28 | 1.536,00 |
| 60918 | | WDR | NBR | C | 133,35 | 165,1 | 15,87 | 3.041,85 |
| 22358 | | WDR | NBR | A | 135 | 160 | 12 | 1.100,86 |
| 40058 | | WDR | NBR | AS | 135 | 160 | 12 | 1.138,43 |
| 18398 | | WDR | NBR | A | 135 | 160 | 13 | 1.084,22 |
| 18399 | | WDR | NBR | C | 135 | 160 | 13 | 1.981,06 |
| 18400 | | WDR | NBR | A | 135 | 160 | 15 | 1.100,86 |
| 18402 | | WDR | NBR | C | 135 | 160 | 15 | 1.981,06 |
| 19229 | | WDR | NBR | BS | 135 | 162 | 13 | 1.854,61 |
| 18403 | | WDR | NBR | A | 135 | 165 | 12 | 1.243,09 |
| 72457 | | WDR | NBR | AS | 135 | 165 | 13 | 1.160,07 |
| 19643 | | WDR | NBR | C | 135 | 165 | 13 | 2.308,34 |
| 19550 | | WDR | NBR | A | 135 | 170 | 12 | 1.242,19 |
| 19551 | | WDR | NBR | AS | 135 | 170 | 12 | 1.304,18 |
| 40454 | | WDR | NBR | C | 135 | 170 | 13 | 2.308,34 |
| 40061 | | WDR | NBR | AS | 135 | 170 | 14 | 1.737,01 |
| 41397 | | WDR | NBR | A | 135 | 170 | 15 | 1.776,53 |
| 36552 | | WDR | NBR | AS | 135 | 170 | 15 | 1.317,02 |
| 22113 | | WDR | NBR | C | 135 | 170 | 15 | 2.308,34 |
| 27003 | | WDR | NBR | A | 136,52 | 161,92 | 12,7 | 1.536,00 |
| 34837 | | WDR | NBR | A | 138 | 160 | 15 | 1.100,86 |

| CODICE | NUOVO CODICE | TIPO | MAT. | SPEC. | d1 mm | d2 mm | b mm | LISTINO 5-2016 X 100 € |
|---|---|---|---|---|---|---|---|---|
| 55997 | | WDR | NBR | C | 138 | 160 | 15 | 1.981,06 |
| 26564 | | WDR | NBR | A | 138,12 | 165,1 | 12,7 | 1.536,00 |
| 20210 | | WDR | NBR | A | 139,7 | 158,75 | 12,7 | 1.321,53 |
| 20214 | | WDR | NBR | A | 139,7 | 165,1 | 12,7 | 1.638,23 |
| 59731 | | WDR | NBR | A | 139,7 | 171,45 | 12,7 | 1.765,35 |
| 118710 | | WDR | NBR | ASY | 140 | 160 | 10 | 1.747,54 |
| 18406 | | WDR | NBR | A | 140 | 160 | 13 | 1.100,86 |
| 40063 | | WDR | NBR | AS | 140 | 160 | 13 | 1.155,41 |
| 18407 | | WDR | NBR | B | 140 | 160 | 13 | 1.581,87 |
| 18408 | | WDR | NBR | C | 140 | 160 | 13 | 1.981,06 |
| 48774 | | WDR | NBR | CS | 140 | 160 | 13 | 2.080,24 |
| 44261 | | WDR | NBR | A | 140 | 165 | 15 | 1.208,00 |
| 19661 | | WDR | NBR | C | 140 | 160 | 15 | 2.308,34 |
| 53093 | | WDR | NBR | A | 140 | 165 | 12 | 1.242,19 |
| 18409 | | WDR | NBR | C | 140 | 165 | 12 | 2.308,34 |
| 40179 | | WDR | NBR | BS | 140 | 165 | 14 | 1.854,61 |
| 44261 | | WDR | NBR | A | 140 | 165 | 15 | 1.208,00 |
| 131079 | | WDR | NBR | AS | 140 | 165 | 15 | 1.304,18 |
| 34888 | | WDR | NBR | C | 140 | 165 | 15 | 2.308,34 |
| 18410 | | WDR | NBR | A | 140 | 170 | 12 | 1.242,19 |
| 38477 | | WDR | NBR | AS | 140 | 170 | 12 | 1.304,18 |
| 92943 | | WDR | NBR | CS | 140 | 170 | 12 | 2.423,76 |
| 40065 | | WDR | NBR | A | 140 | 170 | 13 | 1.242,19 |
| 40064 | | WDR | NBR | AS | 140 | 170 | 13 | 1.304,18 |
| 18411 | | WDR | NBR | C | 140 | 170 | 13 | 2.308,34 |
| 19994 | | WDR | NBR | AS | 140 | 170 | 14 | 1.304,18 |
| 40180 | | WDR | NBR | BS | 140 | 170 | 14 | 1.854,61 |
| 18412 | | WDR | NBR | C | 140 | 170 | 14 | 2.308,34 |
| 18413 | | WDR | NBR | A | 140 | 170 | 15 | 1.242,19 |
| 37182 | | WDR | NBR | AS | 140 | 170 | 15 | 1.304,18 |
| 18414 | | WDR | NBR | B | 140 | 170 | 15 | 1.467,07 |
| 18415 | | WDR | NBR | C | 140 | 170 | 15 | 2.308,34 |
| 19761 | | WDR | NBR | CS | 140 | 170 | 15 | 2.423,64 |
| 37356 | | WDR | NBR | AS | 140 | 175 | 15 | 2.334,22 |
| 19553 | | WDR | NBR | A | 140 | 180 | 12 | 1.351,29 |
| 40067 | | WDR | NBR | AS | 140 | 180 | 12 | 1.418,85 |
| 38454 | | WDR | NBR | A | 140 | 180 | 13 | 1.450,46 |
| 19554 | | WDR | NBR | A | 140 | 180 | 15 | 1.351,29 |
| 81016 | | WDR | NBR | BS | 140 | 180 | 15 | 1.931,47 |
| 19611 | | WDR | NBR | C | 140 | 180 | 15 | 2.644,31 |
| 83488 | | WDR | NBR | C | 140 | 190 | 15 | 3.054,65 |
| 20858 | | WDR | NBR | A | 142,87 | 168,27 | 12,7 | 1.536,00 |
| 34761 | | WDR | NBR | A | 142,87 | 171,45 | 14,28 | 1.765,35 |
| 19152 | | WDR | NBR | A | 144 | 160 | 12 | 1.100,86 |
| 19663 | | WDR | NBR | C | 145 | 165 | 13 | 2.308,34 |
| 19347 | | WDR | NBR | AS | 145 | 167 | 13 | 1.454,36 |
| 40070 | | WDR | NBR | AS | 145 | 170 | 12 | 1.393,48 |
| 187798 | | WDR | NBR | AS | 145 | 170 | 13 | 1.393,48 |
| 18417 | | WDR | NBR | BS | 145 | 170 | 13 | 1.854,61 |

| CODICE | NUOVO CODICE | TIPO | MAT. | SPEC. | d1 mm | d2 mm | b mm | LISTINO 5-2016 X 100 € |
|---|---|---|---|---|---|---|---|---|
| 19662 | | WDR | NBR | C | 145 | 170 | 13 | 2.308,34 |
| 53106 | | WDR | NBR | AS | 145 | 170 | 15 | 1.304,18 |
| 18418 | | WDR | NBR | A | 145 | 170 | 15 | 1.242,19 |
| 40181 | | WDR | NBR | B | 145 | 170 | 15 | 1.766,59 |
| 18419 | | WDR | NBR | C | 145 | 170 | 15 | 2.423,64 |
| 35287 | | WDR | NBR | B | 145 | 175 | 13 | 1.839,73 |
| 40182 | | WDR | NBR | BS | 145 | 175 | 13 | 1.931,47 |
| 35387 | | WDR | NBR | C | 145 | 175 | 13 | 2.644,31 |
| 19555 | | WDR | NBR | BS | 145 | 175 | 14 | 1.931,47 |
| 18420 | | WDR | NBR | A | 145 | 175 | 15 | 1.351,29 |
| 40072 | | WDR | NBR | AS | 145 | 175 | 15 | 1.419,47 |
| 38704 | | WDR | NBR | C | 145 | 175 | 15 | 2.644,31 |
| 19556 | | WDR | NBR | A | 145 | 180 | 12 | 1.351,29 |
| 21585 | | WDR | NBR | A | 145 | 180 | 13 | 1.351,29 |
| 22359 | | WDR | NBR | A | 145 | 180 | 14 | 1.450,46 |
| 40183 | | WDR | NBR | BS | 145 | 180 | 15 | 1.931,47 |
| 20634 | | WDR | NBR | C | 145 | 180 | 15 | 2.644,31 |
| 48776 | | WDR | NBR | CS | 145 | 180 | 15 | 2.776,96 |
| 83813 | | WDR | NBR | CS | 146,05 | 168,28 | 15,87 | 2.951,25 |
| 37610 | | WDR | NBR | C | 146,05 | 171,45 | 12,7 | 2.644,31 |
| 19987 | | WDR | NBR | A | 146,05 | 171,45 | 12,7 | 1.765,35 |
| 83558 | | WDR | NBR | CS | 146,05 | 171,5 | 14,28 | 2.776,96 |
| 24426 | | WDR | NBR | A | 146,05 | 177,8 | 12,7 | 1.765,35 |
| 38455 | | WDR | NBR | A | 148 | 170 | 14,5 | 1.125,40 |
| 37909 | | WDR | NBR | CS | 148 | 170 | 14,5 | 2.308,34 |
| 40074 | | WDR | NBR | AS | 148 | 170 | 15 | 1.454,17 |
| 18421 | | WDR | NBR | C | 148 | 170 | 15 | 2.308,34 |
| 40457 | | WDR | NBR | C | 148 | 180 | 15 | 2.644,31 |
| 56023 | | WDR | NBR | A | 149,22 | 171,45 | 15,87 | 1.765,35 |
| 18423 | | WDR | NBR | B | 150 | 168 | 13 | 1.766,59 |
| 21586 | | WDR | NBR | A | 150 | 170 | 12 | 1.242,19 |
| 18424 | | WDR | NBR | A | 150 | 170 | 15 | 1.242,19 |
| 90050 | | WDR | NBR | BS | 150 | 170 | 15 | 1.854,61 |
| 19664 | | WDR | NBR | C | 150 | 170 | 15 | 2.308,34 |
| 82952 | | WDR | NBR | CS | 150 | 170 | 15 | 2.423,64 |
| 118711 | | WDR | NBR | ASY | 150 | 180 | 8,5 | 2.504,22 |
| 18425 | | WDR | NBR | A | 150 | 180 | 12 | 1.351,29 |
| 108665 | | WDR | NBR | AS | 150 | 180 | 12 | 1.884,36 |
| 19665 | | WDR | NBR | A | 150 | 180 | 13 | 1.351,29 |
| 40075 | | WDR | NBR | AS | 150 | 180 | 13 | 1.419,47 |
| 18426 | | WDR | NBR | B | 150 | 180 | 13 | 1.839,73 |
| 18427 | | WDR | NBR | C | 150 | 180 | 13 | 2.644,31 |
| 19666 | | WDR | NBR | CS | 150 | 180 | 13 | 2.776,96 |
| 40076 | | WDR | NBR | AS | 150 | 180 | 14 | 1.454,09 |
| 41401 | | WDR | NBR | A | 150 | 180 | 14 | 1.351,29 |
| 19557 | | WDR | NBR | AS | 150 | 180 | 15 | 1.419,47 |
| 18428 | | WDR | NBR | A | 150 | 180 | 15 | 1.351,29 |
| 19667 | | WDR | NBR | B | 150 | 180 | 15 | 1.839,73 |
| 27382 | | WDR | NBR | BS | 150 | 180 | 15 | 1.931,47 |

| CODICE | NUOVO CODICE | TIPO | MAT. | SPEC. | d1 mm | d2 mm | b mm | LISTINO 5-2016 X 100 € |
|---|---|---|---|---|---|---|---|---|
| 18429 | | WDR | NBR | C | 150 | 180 | 15 | 2.644,31 |
| 19668 | | WDR | NBR | CS | 150 | 180 | 15 | 2.776,96 |
| 49614 | | WDR | NBR | BS | 150 | 190 | 13 | 2.080,24 |
| 132876 | | WDR | NBR | A | 150 | 190 | 15 | 1.550,78 |
| 27690 | | WDR | NBR | BS | 150 | 190 | 15 | 2.080,24 |
| 19669 | | WDR | NBR | C | 150 | 190 | 15 | 3.054,65 |
| 40459 | | WDR | NBR | C | 150 | 200 | 15 | 3.603,84 |
| 27291 | | WDR | NBR | A | 150,81 | 177,8 | 12,7 | 1.765,35 |
| 20212 | | WDR | NBR | A | 152,4 | 177,8 | 12,7 | 1.765,35 |
| 60009 | | WDR | NBR | AS | 152,4 | 177,8 | 12,7 | 1.854,61 |
| 24218 | | WDR | NBR | A | 152,4 | 190,5 | 19,05 | 2.436,04 |
| 40078 | | WDR | NBR | A | 155 | 174 | 12 | 1.335,53 |
| 54384 | | WDR | NBR | A | 155 | 175 | 12 | 1.809,98 |
| 44264 | | WDR | NBR | A | 155 | 180 | 15 | 1.351,29 |
| 19558 | | WDR | NBR | AS | 155 | 180 | 15 | 1.419,47 |
| 56024 | | WDR | NBR | BS | 155 | 180 | 15 | 1.931,47 |
| 26426 | | WDR | NBR | A | 155 | 190 | 15 | 1.550,78 |
| 40079 | | WDR | NBR | AS | 155 | 190 | 15 | 1.628,33 |
| 18432 | | WDR | NBR | C | 155 | 180 | 15 | 2.644,31 |
| 37024 | | WDR | NBR | C | 155 | 190 | 15 | 3.054,65 |
| 48780 | | WDR | NBR | C | 155 | 200 | 15 | 3.603,84 |
| 21024 | | WDR | NBR | A | 155,58 | 180,98 | 12,7 | 2.020,73 |
| 35606 | | WDR | NBR | A | 157,16 | 184,15 | 12,7 | 2.020,73 |
| 40460 | | WDR | NBR | C | 158 | 180 | 15 | 2.644,31 |
| 20232 | | WDR | NBR | AS | 158,75 | 177,8 | 9,52 | 1.854,61 |
| 21525 | | WDR | NBR | A | 158,75 | 184,15 | 12,7 | 2.020,73 |
| 60012 | | WDR | NBR | AS | 158,75 | 184,15 | 12,7 | 2.122,39 |
| 83495 | | WDR | NBR | C | 158,75 | 196,85 | 15,87 | 3.603,84 |
| 41327 | | WDR | NBR | AS | 160 | 180 | 10 | 1.419,47 |
| 35328 | | WDR | NBR | B | 160 | 180 | 10 | 1.839,73 |
| 44245 | | WDR | NBR | A | 160 | 180 | 12 | 1.620,24 |
| 40080 | | WDR | NBR | AS | 160 | 180 | 13 | 1.701,25 |
| 38757 | | WDR | NBR | A | 160 | 80 | 15 | 1.611,68 |
| 40193 | | WDR | NBR | BS | 160 | 180 | 15 | 1.931,47 |
| 19637 | | WDR | NBR | C | 160 | 180 | 15 | 2.644,31 |
| 56237 | | WDR | NBR | CS | 160 | 180 | 15 | 2.776,96 |
| 18434 | | WDR | NBR | A | 160 | 185 | 10 | 1.486,42 |
| 40081 | | WDR | NBR | AS | 160 | 185 | 10 | 1.560,80 |
| 18673 | | WDR | NBR | B | 160 | 185 | 10 | 1.981,06 |
| 38701 | | WDR | NBR | C | 160 | 185 | 10 | 3.054,65 |
| 39252 | | WDR | NBR | AS | 160 | 185 | 13 | 2.638,30 |
| 18435 | | WDR | NBR | BS | 160 | 185 | 13 | 2.080,24 |
| 18436 | | WDR | NBR | A | 160 | 185 | 15 | 2.621,20 |
| 40082 | | WDR | NBR | AS | 160 | 190 | 13 | 1.560,80 |
| 18437 | | WDR | NBR | A | 160 | 190 | 13 | 1.486,42 |
| 19670 | | WDR | NBR | B | 160 | 190 | 13 | 1.981,06 |
| 19638 | | WDR | NBR | C | 160 | 190 | 13 | 3.054,65 |
| 18438 | | WDR | NBR | A | 160 | 190 | 15 | 1.486,42 |
| 19559 | | WDR | NBR | AS | 160 | 190 | 15 | 1.560,80 |

| CODICE | NUOVO CODICE | TIPO | MAT. | SPEC. | d1 mm | d2 mm | b mm | LISTINO 5-2016 X 100 € |
|---|---|---|---|---|---|---|---|---|
| 19762 | | WDR | NBR | B | 160 | 190 | 15 | 1.981,06 |
| 19639 | | WDR | NBR | C | 160 | 190 | 15 | 3.054,65 |
| 19763 | | WDR | NBR | CS | 160 | 190 | 15 | 3.207,14 |
| 18439 | | WDR | NBR | A | 160 | 200 | 12 | 1.671,13 |
| 40084 | | WDR | NBR | AS | 160 | 200 | 12 | - |
| 48783 | | WDR | NBR | C | 160 | 200 | 14 | 3.603,84 |
| 18440 | | WDR | NBR | A | 160 | 200 | 15 | 1.671,13 |
| 44527 | | WDR | NBR | AS | 160 | 200 | 15 | 1.754,19 |
| 18441 | | WDR | NBR | B | 160 | 200 | 15 | 2.351,73 |
| 38700 | | WDR | NBR | C | 160 | 200 | 15 | 3.603,84 |
| 27575 | | WDR | NBR | A | 161,92 | 187,32 | 12,7 | 2.020,73 |
| 35054 | | WDR | NBR | A | 161,92 | 190,5 | 12,7 | 2.436,04 |
| 36373 | | WDR | NBR | A | 162 | 190 | 12 | 1.486,42 |
| 18442 | | WDR | NBR | A | 165 | 190 | 13 | 1.486,42 |
| 36847 | | WDR | NBR | AS | 165 | 190 | 13 | 1.560,74 |
| 18443 | | WDR | NBR | C | 165 | 190 | 13 | 3.054,65 |
| 27383 | | WDR | NBR | CS | 165 | 190 | 13 | 3.207,14 |
| 19562 | | WDR | NBR | AS | 165 | 190 | 15 | 1.491,31 |
| 34889 | | WDR | NBR | C | 165 | 190 | 15 | 3.054,65 |
| 26382 | | WDR | NBR | A | 165 | 200 | 15 | 1.671,13 |
| 38699 | | WDR | NBR | C | 165 | 200 | 15 | 3.603,84 |
| 20213 | | WDR | NBR | A | 165,1 | 190,5 | 12,7 | 2.436,04 |
| 60013 | | WDR | NBR | AS | 165,1 | 190,5 | 12,7 | 2.557,53 |
| 92871 | | WDR | NBR | C | 165,1 | 190,5 | 14,28 | 3.603,84 |
| 20859 | | WDR | NBR | A | 165,1 | 196,85 | 12,7 | 2.436,04 |
| 40462 | | WDR | NBR | C | 168 | 190 | 15 | 3.054,65 |
| 38698 | | WDR | NBR | C | 168 | 200 | 15 | 3.603,84 |
| 25675 | | WDR | NBR | A | 170 | 190 | 13 | 1.703,52 |
| 81160 | | WDR | NBR | A | 170 | 190 | 15 | 1.486,42 |
| 40085 | | WDR | NBR | AS | 170 | 190 | 13 | 1.981,08 |
| 18444 | | WDR | NBR | C | 170 | 190 | 15 | 3.054,65 |
| 18445 | | WDR | NBR | A | 170 | 200 | 12 | 1.671,13 |
| 130994 | | WDR | NBR | AS | 170 | 200 | 12 | 1.754,19 |
| 19630 | | WDR | NBR | C | 170 | 200 | 13 | 3.603,84 |
| 76592 | | WDR | NBR | CS | 170 | 200 | 13 | 3.783,60 |
| 18446 | | WDR | NBR | A | 170 | 200 | 15 | 1.671,13 |
| 19563 | | WDR | NBR | AS | 170 | 200 | 15 | 1.754,19 |
| 23728 | | WDR | NBR | B | 170 | 200 | 15 | 2.351,73 |
| 40194 | | WDR | NBR | BS | 170 | 200 | 15 | 2.469,51 |
| 18447 | | WDR | NBR | C | 170 | 200 | 15 | 3.603,85 |
| 123128 | | WDR | NBR | CS | 170 | 200 | 15 | 3.784,04 |
| 10831 | | WDR | NBR | A | 170 | 200 | 16 | 2.905,11 |
| 40086 | | WDR | NBR | AS | 170 | 200 | 16 | 2.018,49 |
| 41333 | | WDR | NBR | AS | 170 | 210 | 15 | 2.969,17 |
| 22248 | | WDR | NBR | C | 170 | 215 | 16 | 4.439,45 |
| 40087 | | WDR | NBR | A | 170 | 220 | 15 | 3.506,81 |
| 20216 | | WDR | NBR | A | 171,45 | 196,85 | 12,7 | 2.436,04 |
| 40464 | | WDR | NBR | C | 172 | 200 | 15 | 3.603,84 |
| 18449 | | WDR | NBR | A | 175 | 200 | 15 | 1.671,13 |

| CODICE | NUOVO CODICE | TIPO | MAT. | SPEC. | d1 mm | d2 mm | b mm | LISTINO 5-2016 X 100 € |
|---|---|---|---|---|---|---|---|---|
| 18450 | | WDR | NBR | C | 175 | 200 | 15 | 3.603,84 |
| 21917 | | WDR | NBR | A | 175 | 205 | 15 | 2.750,35 |
| 21579 | | WDR | NBR | A | 175 | 210 | 14 | 2.599,68 |
| 92874 | | WDR | NBR | C | 175 | 210 | 15 | 4.685,04 |
| 19640 | | WDR | NBR | C | 175 | 215 | 16 | 5.785,06 |
| 39241 | | WDR | NBR | A | 177,8 | 215,9 | 12,7 | 3.458,80 |
| 27292 | | WDR | NBR | AS | 177,8 | 215,9 | 12,7 | 3.632,36 |
| 40465 | | WDR | NBR | C | 178 | 200 | 15 | 3.603,84 |
| 22360 | | WDR | NBR | A | 180 | 200 | 13 | 1.671,13 |
| 34838 | | WDR | NBR | A | 180 | 200 | 15 | 1.671,13 |
| 40089 | | WDR | NBR | AS | 180 | 200 | 15 | 1.754,19 |
| 18452 | | WDR | NBR | BS | 180 | 200 | 15 | 2.469,51 |
| 19641 | | WDR | NBR | C | 180 | 200 | 15 | 3.603,84 |
| 57187 | | WDR | NBR | A | 180 | 210 | 10 | 1.911,32 |
| 187501 | | WDR | NBR | A | 180 | 210 | 13 | 2.473,95 |
| 41334 | | WDR | NBR | AS | 180 | 210 | 14 | 4.244,63 |
| 18453 | | WDR | NBR | A | 180 | 210 | 15 | 1.764,11 |
| 19564 | | WDR | NBR | AS | 180 | 210 | 15 | 1.719,48 |
| 19642 | | WDR | NBR | C | 180 | 210 | 15 | 4.687,11 |
| 41336 | 186217 | WDR | NBR | AS | 180 | 210 | 16 | 2.584,80 |
| 41337 | | WDR | NBR | AS | 180 | 215 | 15 | 2.540,17 |
| 37099 | | WDR | NBR | C | 180 | 215 | 15 | 5.380,96 |
| 22254 | 186023 | WDR | NBR | A | 180 | 215 | 16 | 2.026,93 |
| 19565 | | WDR | NBR | AS | 180 | 215 | 16 | 2.540,17 |
| 27686 | | WDR | NBR | B | 180 | 215 | 16 | 3.712,94 |
| 19610 | | WDR | NBR | C | 180 | 215 | 16 | 4.479,61 |
| 19870 | 193907 | WDR | NBR | A | 180 | 220 | 15 | 2.106,27 |
| 40091 | | WDR | NBR | AS | 180 | 220 | 15 | 2.550,09 |
| 48792 | | WDR | NBR | CS | 180 | 220 | 15 | 4.798,91 |
| 44269 | | WDR | NBR | A | 180 | 220 | 16 | 3.027,13 |
| 22009 | | WDR | NBR | C | 180 | 220 | 16 | 4.334,04 |
| 25981 | | WDR | NBR | A | 184,15 | 222,25 | 14,28 | 3.768,73 |
| 40092 | | WDR | NBR | AS | 185 | 210 | 13 | 2.023,21 |
| 18455 | | WDR | NBR | A | 185 | 210 | 13 | 1.759,15 |
| 22019 | | WDR | NBR | C | 185 | 210 | 13 | 4.910,34 |
| 64800 | | WDR | NBR | A | 185 | 215 | 15 | 2.359,17 |
| 19644 | | WDR | NBR | C | 185 | 215 | 15 | 4.148,28 |
| 83432 | | WDR | NBR | A | 185 | 215 | 16 | 2.281,07 |
| 22010 | | WDR | NBR | C | 185 | 230 | 16 | 5.910,95 |
| 92224 | | WDR | NBR | C | 186 | 215,9 | 12 | 5.777,06 |
| 54725 | | WDR | NBR | AS | 190 | 215 | 15 | 4.742,45 |
| 38544 | | WDR | NBR | C | 190 | 215 | 15 | 4.002,49 |
| 83453 | | WDR | NBR | AS | 190 | 215 | 16 | 3.043,49 |
| 18456 | | WDR | NBR | C | 190 | 215 | 16 | 4.029,07 |
| 40094 | | WDR | NBR | A | 190 | 220 | 12 | 2.843,10 |
| 38546 | | WDR | NBR | C | 190 | 220 | 12 | 5.500,60 |
| 92933 | | WDR | NBR | CS | 190 | 220 | 12 | 5.380,35 |
| 18458 | | WDR | NBR | AS | 190 | 220 | 15 | 2.550,09 |
| 18457 | | WDR | NBR | A | 190 | 220 | 15 | 2.086,44 |

| CODICE | NUOVO CODICE | TIPO | MAT. | SPEC. | d1 mm | d2 mm | b mm | LISTINO 5-2016 X 100 € |
|---|---|---|---|---|---|---|---|---|
| 35106 | | WDR | NBR | B | 190 | 220 | 15 | 3.266,94 |
| 19612 | | WDR | NBR | C | 190 | 220 | 15 | 4.102,21 |
| 44266 | | WDR | NBR | A | 190 | 220 | 16 | 2.149,66 |
| 19613 | | WDR | NBR | C | 190 | 220 | 16 | 4.810,08 |
| 38478 | 186082 | WDR | NBR | AS | 190 | 225 | 16 | 3.453,84 |
| 27682 | 186050 | WDR | NBR | A | 190 | 225 | 16 | 2.877,37 |
| 72641 | | WDR | NBR | A | 190 | 230 | 15 | 2.596,32 |
| 43126 | | WDR | NBR | AS | 190 | 230 | 15 | 2.726,13 |
| 81230 | 186322 | WDR | NBR | AS | 190 | 230 | 16 | 4.782,81 |
| 19744 | | WDR | NBR | C | 190 | 230 | 16 | 4.433,21 |
| 27041 | | WDR | NBR | A | 190,5 | 228,6 | 14,28 | 3.768,73 |
| 92881 | | WDR | NBR | C | 190,5 | 228,6 | 19,05 | 5.950,62 |
| 26100 | | WDR | NBR | A | 193,68 | 231,77 | 14,28 | 4.073,70 |
| 38548 | | WDR | NBR | C | 195 | 220 | 16 | 4.817,52 |
| 22011 | 185060 | WDR | NBR | C | 195 | 230 | 15 | 5.215,47 |
| 20227 | 185992 | WDR | NBR | A | 195 | 230 | 16 | 2.208,61 |
| 22842 | | WDR | NBR | C | 195 | 230 | 16 | 5.910,95 |
| 60616 | | WDR | NBR | B | 196,85 | 222,25 | 12,7 | 3.795,91 |
| 18461 | 185523 | WDR | NBR | A | 200 | 225 | 15 | 2.589,76 |
| 38456 | | WDR | NBR | A | 200 | 230 | 13 | 3.111,68 |
| 18462 | | WDR | NBR | A | 200 | 230 | 15 | 2.247,60 |
| 37605 | 185080 | WDR | NBR | AS | 200 | 230 | 15 | 2.193,05 |
| 35105 | | WDR | NBR | B | 200 | 230 | 15 | 3.796,00 |
| 40357 | | WDR | NBR | BS | 200 | 230 | 15 | 3.340,43 |
| 18463 | | WDR | NBR | C | 200 | 230 | 15 | 4.247,26 |
| 44267 | | WDR | NBR | A | 200 | 230 | 16 | 3.681,35 |
| 41345 | | WDR | NBR | AS | 200 | 230 | 16 | 3.865,42 |
| 37650 | | WDR | NBR | A | 200 | 235 | 18 | 3.645,53 |
| 63209 | 186293 | WDR | NBR | A | 200 | 240 | 15 | 2.693,67 |
| 57320 | | WDR | NBR | C | 200 | 240 | 16 | 6.327,49 |
| 25906 | | WDR | NBR | A | 200 | 250 | 15 | 2.985,23 |
| 19614 | | WDR | NBR | C | 200 | 250 | 15 | 7.394,89 |
| 43939 | | WDR | NBR | C | 200 | 250 | 16 | 7.905,65 |
| 25983 | | WDR | NBR | A | 203,2 | 241,3 | 14,28 | 4.531,15 |
| 44852 | | WDR | NBR | B | 205 | 230 | 15 | 3.795,91 |
| 38551 | | WDR | NBR | C | 205 | 230 | 15 | 5.944,42 |
| 22259 | | WDR | NBR | A | 205 | 230 | 16 | 3.111,68 |
| 22012 | | WDR | NBR | C | 205 | 230 | 16 | 5.910,95 |
| 19566 | 185041 | WDR | NBR | A | 210 | 240 | 15 | 2.359,17 |
| 43123 | | WDR | NBR | AS | 210 | 240 | 15 | 2.442,23 |
| 40467 | | WDR | NBR | C | 210 | 250 | 13 | 7.202,73 |
| 18465 | 184987 | WDR | NBR | A | 210 | 250 | 15 | 3.332,35 |
| 185855 | | WDR | NBR | AS | 210 | 250 | 15 | 3.498,98 |
| 44607 | | WDR | NBR | C | 210 | 250 | 15 | 7.481,67 |
| 41406 | | WDR | NBR | A | 210 | 250 | 16 | 3.332,35 |
| 19615 | 185856 | WDR | NBR | C | 210 | 250 | 16 | 5.089,02 |
| 18690 | | WDR | NBR | A | 215 | 240 | 12 | 2.359,17 |
| 48804 | | WDR | NBR | C | 215 | 240 | 12 | 7.202,73 |
| 38555 | 186083 | WDR | NBR | C | 215 | 250 | 15 | 6.479,98 |

| CODICE | NUOVO CODICE | TIPO | MAT. | SPEC. | d1 mm | d2 mm | b mm | LISTINO 5-2016 X 100 € |
|---|---|---|---|---|---|---|---|---|
| 27683 | | WDR | NBR | A | 215 | 250 | 16 | 4.925,95 |
| 92892 | | WDR | NBR | C | 215 | 250 | 16 | 6.786,19 |
| 34875 | | WDR | NBR | C | 216 | 254 | 14,28 | 6.103,11 |
| 27440 | | WDR | NBR | A | 216 | 254 | 14,28 | 4.948,93 |
| 40468 | | WDR | NBR | C | 218 | 250 | 16 | 6.606,43 |
| 19745 | | WDR | NBR | B | 220 | 250 | 11 | 4.124,52 |
| 83434 | | WDR | NBR | A | 220 | 250 | 12 | 4.073,26 |
| 130993 | | WDR | NBR | AS | 220 | 250 | 14 | 3.055,89 |
| 40097 | | WDR | NBR | AS | 220 | 250 | 15 | 2.804,23 |
| 18466 | | WDR | NBR | A | 220 | 250 | 15 | 2.687,70 |
| 40358 | | WDR | NBR | B | 220 | 250 | 15 | 4.124,08 |
| 19616 | | WDR | NBR | C | 220 | 250 | 15 | 4.896,86 |
| 40469 | | WDR | NBR | CS | 220 | 250 | 15 | 6.786,19 |
| 38758 | | WDR | NBR | A | 220 | 250 | 16 | 2.687,70 |
| 48805 | | WDR | NBR | CS | 220 | 250 | 18 | 9.462,73 |
| 37649 | | WDR | NBR | A | 220 | 255 | 16 | 3.337,31 |
| 60268 | 186284 | WDR | NBR | A | 220 | 260 | 15 | 2.922,00 |
| 40561 | | WDR | NBR | C | 220 | 260 | 15 | 6.103,11 |
| 38457 | | WDR | NBR | A | 220 | 260 | 16 | 3.375,74 |
| 20889 | | WDR | NBR | C | 220 | 270 | 15 | 6.944,87 |
| 22014 | | WDR | NBR | C | 225 | 250 | 16 | 6.533,29 |
| 36793 | | WDR | NBR | C | 230 | 255 | 15 | 6.103,11 |
| 38479 | | WDR | NBR | AS | 230 | 260 | 15 | 2.892,25 |
| 19567 | | WDR | NBR | A | 230 | 260 | 15 | 2.711,25 |
| 72642 | 185115 | WDR | NBR | A | 230 | 270 | 15 | 3.661,28 |
| 44742 | | WDR | NBR | AS | 230 | 270 | 15 | 3.844,35 |
| 19617 | | WDR | NBR | C | 230 | 270 | 15 | 6.606,43 |
| 69544 | | WDR | NBR | C | 230 | 270 | 16 | 6.606,43 |
| 62329 | | WDR | NBR | CS | 230 | 270 | 16 | 6.936,19 |
| 18468 | | WDR | NBR | A | 230 | 280 | 15 | 4.216,26 |
| 19618 | | WDR | NBR | C | 235 | 270 | 16 | 6.606,43 |
| 40100 | | WDR | NBR | AS | 240 | 270 | 15 | 2.931,92 |
| 20230 | | WDR | NBR | A | 240 | 270 | 15 | 2.926,96 |
| 19619 | | WDR | NBR | C | 240 | 270 | 15 | 5.420,02 |
| 21078 | | WDR | NBR | CS | 240 | 270 | 15 | 6.943,63 |
| 83435 | | WDR | NBR | A | 240 | 275 | 16 | 5.437,38 |
| 20912 | | WDR | NBR | B | 240 | 280 | 14 | 4.702,03 |
| 18469 | | WDR | NBR | A | 240 | 280 | 15 | 3.430,28 |
| 76105 | | WDR | NBR | A | 240 | 280 | 16 | 4.274,53 |
| 18470 | | WDR | NBR | C | 240 | 280 | 16 | 6.241,95 |
| 62330 | | WDR | NBR | CS | 240 | 280 | 16 | 7.216,37 |
| 22016 | | WDR | NBR | C | 240 | 290 | 16 | 9.946,21 |
| 158771 | | WDR | NBR | AS | 245 | 273 | 15 | 5.246,02 |
| 18471 | | WDR | NBR | A | 250 | 280 | 15 | 3.337,31 |
| 26429 | | WDR | NBR | B | 250 | 280 | 15 | 4.702,23 |
| 19621 | | WDR | NBR | C | 250 | 280 | 15 | 6.142,78 |
| 38622 | 186086 | WDR | NBR | CS | 250 | 280 | 15 | 6.473,78 |
| 41291 | | WDR | NBR | AS | 250 | 280 | 16 | 4.074,94 |
| 26371 | | WDR | NBR | C | 250 | 280 | 16 | 7.335,38 |

| CODICE | NUOVO CODICE | TIPO | MAT. | SPEC. | d1 mm | d2 mm | b mm | LISTINO 5-2016 X 100 € |
|---|---|---|---|---|---|---|---|---|
| 34689 | | WDR | NBR | A | 250 | 290 | 15 | 9.122,67 |
| 10846 | | WDR | NBR | A | 250 | 290 | 16 | 5.427,46 |
| 43104 | 186221 | WDR | NBR | CS | 250 | 290 | 16 | 7.124,63 |
| 48814 | | WDR | NBR | C | 255 | 290 | 16 | 8.575,09 |
| 60283 | | WDR | NBR | C | 258 | 290 | 16 | 10.108,40 |
| 20233 | | WDR | NBR | C | 260 | 280 | 16 | 7.335,38 |
| 55199 | | WDR | NBR | A | 260 | 290 | 15 | 7.770,47 |
| 130995 | | WDR | NBR | AS | 260 | 290 | 15 | 4.847,28 |
| 18472 | | WDR | NBR | A | 260 | 290 | 16 | 3.610,04 |
| 92923 | | WDR | NBR | CS | 260 | 290 | 16 | 8.575,09 |
| 72643 | | WDR | NBR | A | 260 | 300 | 15 | 7.432,26 |
| 20846 | | WDR | NBR | A | 260 | 300 | 18 | 8.980,21 |
| 25806 | | WDR | NBR | A | 260 | 300 | 20 | 4.372,47 |
| 27688 | | WDR | NBR | B | 260 | 300 | 20 | 4.310,82 |
| 75278 | | WDR | NBR | CS | 260 | 300 | 20 | 10.849,15 |
| 13291 | | WDR | NBR | B | 260 | 300 | 22 | 4.310,82 |
| 74724 | 186310 | WDR | NBR | C | 260 | 310 | 16 | 19.979,21 |
| 92902 | | WDR | NBR | C | 260 | 320 | 25 | 20.967,26 |
| 69543 | | WDR | NBR | C | 265 | 290 | 15 | 8.575,09 |
| 38458 | | WDR | NBR | A | 265 | 290 | 16 | 4.246,02 |
| 19624 | | WDR | NBR | C | 265 | 290 | 16 | 8.575,09 |
| 38558 | | WDR | NBR | C | 265 | 310 | 16 | 15.360,04 |
| 90276 | | WDR | NBR | A | 270 | 300 | 15 | 6.236,34 |
| 20794 | | WDR | NBR | B | 270 | 300 | 15 | 6.408,76 |
| 72644 | | WDR | NBR | A | 270 | 310 | 15 | 10.857,60 |
| 57081 | | WDR | NBR | AS | 270 | 310 | 16 | 8.095,32 |
| 19625 | | WDR | NBR | C | 270 | 310 | 16 | 12.907,89 |
| 56652 | | WDR | NBR | CS | 270 | 310 | 16 | 19.979,21 |
| 19873 | | WDR | NBR | C | 270 | 310 | 18 | 15.360,04 |
| 64572 | | WDR | NBR | A | 270 | 310 | 20 | 9.929,74 |
| 135146 | | WDR | NBR | A | 270 | 320 | 18 | 7.216,37 |
| 48820 | | WDR | NBR | C | 272 | 310 | 16 | 19.979,21 |
| 19626 | | WDR | NBR | C | 275 | 310 | 16 | 15.373,68 |
| 21348 | | WDR | NBR | A | 280 | 310 | 15 | 6.962,23 |
| 39356 | | WDR | NBR | AS | 280 | 310 | 15 | 8.095,32 |
| 43116 | 185107 | WDR | NBR | AS | 280 | 310 | 16 | 8.095,32 |
| 19627 | 185858 | WDR | NBR | C | 280 | 310 | 16 | 12.907,89 |
| 72645 | 186305 | WDR | NBR | A | 280 | 320 | 15 | 10.851,20 |
| 44754 | | WDR | NBR | A | 280 | 320 | 18 | 7.722,85 |
| 21580 | | WDR | NBR | A | 280 | 320 | 20 | 7.216,37 |
| 43115 | | WDR | NBR | AS | 280 | 320 | 20 | 7.577,17 |
| 27689 | | WDR | NBR | B | 280 | 320 | 20 | 8.430,05 |
| 19649 | 196056 | WDR | NBR | C | 280 | 320 | 20 | 13.709,98 |
| 130474 | | WDR | NBR | AS | 285 | 310 | 16 | 9.550,53 |
| 22017 | | WDR | NBR | C | 285 | 310 | 16 | 13.305,84 |
| 19628 | | WDR | NBR | C | 290 | 330 | 18 | 14.220,74 |
| 92904 | | WDR | NBR | C | 295 | 335 | 18 | 22.272,68 |
| 19629 | | WDR | NBR | C | 300 | 332 | 16 | 15.413,35 |
| 22844 | | WDR | NBR | CS | 300 | 332 | 16 | 21.225,12 |

| CODICE | NUOVO CODICE | TIPO | MAT. | SPEC. | d1 mm | d2 mm | b mm | LISTINO 5-2016 X 100 € |
|---|---|---|---|---|---|---|---|---|
| 19650 | | WDR | NBR | C | 300 | 335 | 18 | 14.214,39 |
| 17150 | | WDR | NBR | A | 300 | 340 | 16 | 7.777,96 |
| 56317 | | WDR | NBR | C | 300 | 340 | 16 | 17.136,55 |
| 18473 | | WDR | NBR | A | 300 | 340 | 18 | 7.777,96 |
| 22028 | 185061 | WDR | NBR | AS | 300 | 340 | 20 | 9.028,83 |
| 35553 | 185073 | WDR | NBR | A | 300 | 340 | 20 | 7.763,08 |
| 18474 | | WDR | NBR | C | 300 | 340 | 20 | 14.737,70 |
| 44152 | | WDR | NBR | C | 300 | 350 | 20 | 17.765,08 |
| 82111 | 186323 | WDR | NBR | A | 310 | 350 | 18 | 9.356,11 |
| 38567 | 186085 | WDR | NBR | C | 310 | 350 | 18 | 17.765,08 |
| 44757 | | WDR | NBR | AS | 310 | 350 | 20 | 9.367,41 |
| 44957 | 186238 | WDR | NBR | C | 315 | 355 | 18 | 18.725,86 |
| 37361 | | WDR | NBR | C | 315 | 365 | 20 | 19.674,24 |
| 40037 | | WDR | NBR | C | 320 | 350 | 16 | 23.100,80 |
| 18475 | | WDR | NBR | C | 320 | 350 | 18 | 16.002,21 |
| 42990 | 186220 | WDR | NBR | A | 320 | 360 | 18 | 8.261,44 |
| 41298 | | WDR | NBR | AS | 320 | 360 | 18 | 8.261,44 |
| 19651 | | WDR | NBR | C | 320 | 360 | 18 | 16.348,09 |
| 20713 | | WDR | NBR | AS | 320 | 360 | 20 | 12.819,87 |
| 25673 | | WDR | NBR | A | 320 | 360 | 20 | 8.485,83 |
| 20221 | | WDR | NBR | C | 320 | 360 | 20 | 16.851,41 |
| 48837 | | WDR | NBR | CS | 320 | 360 | 20 | 17.727,42 |
| 48840 | | WDR | NBR | C | 320 | 380 | 20 | 20.628,82 |
| 59530 | | WDR | NBR | C | 320 | 380 | 25 | 20.628,82 |
| 38569 | | WDR | NBR | C | 325 | 365 | 16 | 11.702,41 |
| 24895 | | WDR | NBR | A | 330 | 370 | 18 | 10.562,35 |
| 23771 | | WDR | NBR | C | 330 | 370 | 18 | 17.713,01 |
| 56449 | | WDR | NBR | CS | 330 | 370 | 18 | 25.592,63 |
| 69857 | | WDR | NBR | C | 330 | 370 | 20 | 17.713,01 |
| 179158 | | WDR | NBR | AS | 340 | 370 | 15 | 11.090,46 |
| 19632 | 185042 | WDR | NBR | C | 340 | 372 | 16 | 18.560,98 |
| 62332 | | WDR | NBR | CS | 340 | 372 | 16 | 20.628,82 |
| 20887 | | WDR | NBR | A | 340 | 380 | 18 | 10.866,08 |
| 19633 | | WDR | NBR | C | 340 | 380 | 18 | 20.628,82 |
| 36509 | | WDR | NBR | A | 340 | 380 | 20 | 10.549,59 |
| 19634 | | WDR | NBR | C | 340 | 380 | 20 | 17.740,29 |
| 60289 | | WDR | NBR | C | 350 | 380 | 16 | 18.574,61 |
| 38459 | | WDR | NBR | A | 350 | 390 | 18 | 11.417,75 |
| 38571 | | WDR | NBR | C | 350 | 390 | 18 | 18.786,60 |
| 76106 | | WDR | NBR | A | 350 | 390 | 20 | 17.985,35 |
| 48847 | | WDR | NBR | C | 360 | 392 | 20 | 26.402,13 |
| 76178 | | WDR | NBR | A | 360 | 400 | 16 | 11.871,49 |
| 56793 | | WDR | NBR | A | 360 | 400 | 18 | 14.882,82 |
| 44168 | | WDR | NBR | C | 360 | 400 | 18 | 20.284,18 |
| 35406 | | WDR | NBR | A | 360 | 400 | 20 | 11.871,49 |
| 186749 | | WDR | NBR | AS | 360 | 400 | 20 | 15.947,36 |
| 19635 | | WDR | NBR | C | 360 | 400 | 20 | 19.376,71 |
| 38574 | | WDR | NBR | C | 365 | 405 | 18 | 22.007,38 |
| 20222 | | WDR | NBR | A | 370 | 410 | 15 | 11.926,04 |

| CODICE | NUOVO CODICE | TIPO | MAT. | SPEC. | d1 mm | d2 mm | b mm | LISTINO 5-2016 X 100 € |
|---|---|---|---|---|---|---|---|---|
| 48852 | | WDR | NBR | C | 370 | 410 | 20 | 32.423,44 |
| 24746 | | WDR | NBR | A | 380 | 420 | 18 | 13.451,66 |
| 38577 | | WDR | NBR | C | 380 | 420 | 18 | 27.062,93 |
| 38461 | | WDR | NBR | A | 380 | 420 | 20 | 12.218,61 |
| 26239 | | WDR | NBR | AS | 380 | 420 | 20 | 14.202,15 |
| 19636 | | WDR | NBR | C | 380 | 420 | 20 | 22.748,73 |
| 92924 | | WDR | NBR | CS | 390 | 425 | 18 | 26.306,70 |
| 38579 | | WDR | NBR | C | 390 | 430 | 18 | 18.672,63 |
| 37860 | | WDR | NBR | AS | 390 | 430 | 20 | 17.109,01 |
| 38462 | | WDR | NBR | A | 394 | 420 | 16 | 12.878,13 |
| 35443 | | WDR | NBR | C | 395 | 430 | 18 | 28.805,96 |
| 72649 | | WDR | NBR | C | 400 | 440 | 18 | 39.712,95 |
| 69573 | | WDR | NBR | A | 400 | 440 | 20 | 14.481,08 |
| 193493 | | WDR | NBR | AS | 400 | 440 | 20 | 16.357,12 |
| 37477 | | WDR | NBR | C | 400 | 440 | 20 | 27.494,35 |
| 27630 | | WDR | NBR | C | 400 | 450 | 20 | 31.026,78 |
| 69631 | | WDR | NBR | C | 410 | 460 | 22 | 31.589,12 |
| 39233 | | WDR | NBR | A | 420 | 460 | 20 | 16.132,38 |
| 41303 | | WDR | NBR | AS | 420 | 460 | 20 | 16.938,48 |
| 21315 | | WDR | NBR | B | 420 | 460 | 20 | 19.714,80 |
| 38582 | | WDR | NBR | C | 420 | 460 | 20 | 29.210,11 |
| 46484 | | WDR | NBR | CS | 420 | 460 | 20 | 33.954,49 |
| 43648 | | WDR | NBR | A | 420 | 470 | 15 | 20.245,75 |
| 92914 | | WDR | NBR | C | 430 | 480 | 22 | 40.850,34 |
| 38583 | | WDR | NBR | C | 440 | 470 | 20 | 46.426,00 |
| 36709 | | WDR | NBR | A | 440 | 480 | 20 | 15.843,53 |
| 25049 | | WDR | NBR | AS | 440 | 480 | 20 | 22.963,38 |
| 38589 | | WDR | NBR | C | 440 | 480 | 20 | 33.213,14 |
| 48869 | | WDR | NBR | C | 445 | 480 | 16 | 47.969,44 |
| 76108 | | WDR | NBR | A | 450 | 500 | 25 | 20.275,92 |
| 48871 | | WDR | NBR | C | 455 | 495 | 20 | 51.574,52 |
| 83721 | | WDR | NBR | A | 460 | 500 | 20 | 20.275,92 |
| 38592 | | WDR | NBR | C | 460 | 500 | 20 | 33.609,85 |
| 48872 | | WDR | NBR | C | 460 | 510 | 25 | 48.006,97 |
| 24282 | | WDR | NBR | C | 467 | 510 | 20 | 48.006,97 |
| 20711 | | WDR | NBR | C | 470 | 510 | 20 | 38.090,47 |
| 38464 | | WDR | NBR | A | 480 | 520 | 20 | 23.566,58 |
| 25412 | | WDR | NBR | AS | 480 | 520 | 20 | 27.060,80 |
| 38593 | | WDR | NBR | C | 480 | 520 | 20 | 39.869,40 |
| 76110 | | WDR | NBR | A | 480 | 530 | 25 | 25.192,96 |
| 20670 | | WDR | NBR | AS | 480 | 530 | 25 | 2.595,63 |
| 117784 | | WDR | NBR | C | 482 | 530 | 20 | 41.266,31 |
| 38465 | | WDR | NBR | A | 500 | 540 | 20 | 24.543,90 |
| 38594 | | WDR | NBR | C | 500 | 540 | 20 | 44.351,96 |
| 37582 | | WDR | NBR | A | 500 | 550 | 22 | 30.265,84 |
| 37585 | | WDR | NBR | C | 500 | 550 | 22 | 55.433,21 |
| 76109 | | WDR | NBR | A | 500 | 550 | 25 | 38.736,81 |
| 152084 | | WDR | NBR | A | 520 | 560 | 14 | 40.619,24 |
| 87130 | | WDR | NBR | CS | 530 | 580 | 22 | 48.204,36 |

| CODICE | NUOVO CODICE | TIPO | MAT. | SPEC. | d1 mm | d2 mm | b mm | LISTINO 5-2016 X 100 € |
|---|---|---|---|---|---|---|---|---|
| 38602 | | WDR | NBR | C | 560 | 610 | 20 | 63.868,07 |
| 173475 | | WDR | NBR | A | 560 | 610 | 22 | 59.744,52 |
| 38604 | | WDR | NBR | C | 600 | 640 | 20 | 128.026,36 |

# Anelli di tenuta per alberi rotanti

SS304+FKM+PTFE/CARBONE

WCP 20

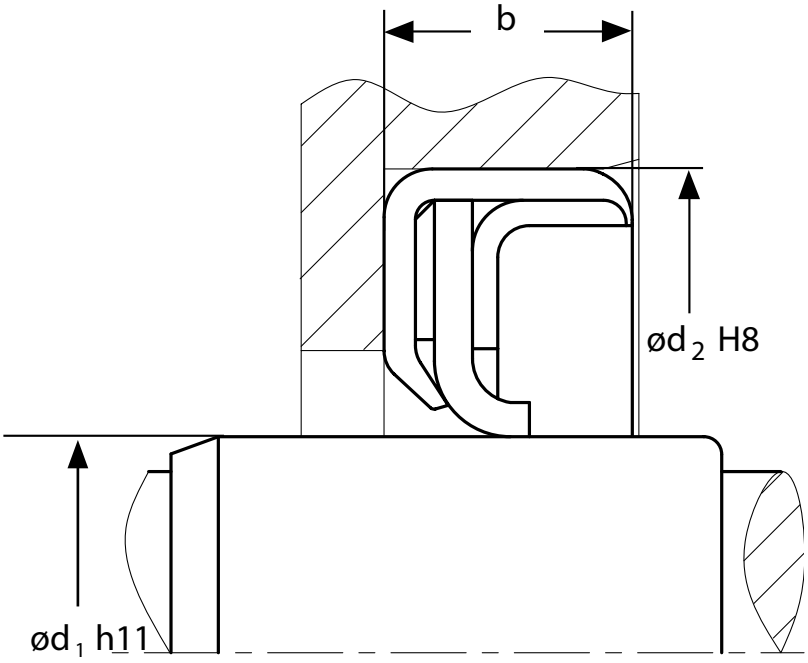
b
ød 2 H8
ød 1 h11

| CODICE | TIPO | MAT. | d1 mm | d2 mm | b mm | LISTINO 5-2016 X 100PCS € |
|---|---|---|---|---|---|---|
| 175332 | WCP 20 | SS304+FKM+PTFE | 10 | 22 | 7 | A RICHIESTA |
| 175333 | WCP 20 | SS304+FKM+PTFE | 15 | 30 | 7 | A RICHIESTA |
| 175334 | WCP 20 | SS304+FKM+PTFE | 20 | 32 | 7 | A RICHIESTA |
| 175335 | WCP 20 | SS304+FKM+PTFE | 16 | 35 | 7 | A RICHIESTA |
| 175336 | WCP 20 | SS304+FKM+PTFE | 20 | 35 | 7 | A RICHIESTA |
| 175337 | WCP 20 | SS304+FKM+PTFE | 25 | 40 | 7 | A RICHIESTA |
| 175338 | WCP 20 | SS304+FKM+PTFE | 30 | 47 | 7 | A RICHIESTA |
| 175339 | WCP 20 | SS304+FKM+PTFE | 35 | 47 | 8 | A RICHIESTA |
| 175340 | WCP 20 | SS304+FKM+PTFE | 35 | 52 | 8 | A RICHIESTA |
| 175341 | WCP 20 | SS304+FKM+PTFE | 42 | 55 | 8 | A RICHIESTA |
| 175342 | WCP 20 | SS304+FKM+PTFE | 45 | 60 | 8 | A RICHIESTA |
| 175343 | WCP 20 | SS304+FKM+PTFE | 40 | 62 | 8 | A RICHIESTA |
| 175344 | WCP 20 | SS304+FKM+PTFE | 45 | 62 | 8 | A RICHIESTA |
| 175345 | WCP 20 | SS304+FKM+PTFE | 45 | 65 | 8 | A RICHIESTA |
| 175346 | WCP 20 | SS304+FKM+PTFE | 50 | 72 | 8 | A RICHIESTA |
| 175347 | WCP 20 | SS304+FKM+PTFE | 52 | 72 | 8 | A RICHIESTA |
| 175348 | WCP 20 | SS304+FKM+PTFE | 60 | 75 | 8 | A RICHIESTA |
| 175349 | WCP 20 | SS304+FKM+PTFE | 70 | 90 | 10 | A RICHIESTA |
| 175350 | WCP 20 | SS304+FKM+PTFE | 70 | 100 | 10 | A RICHIESTA |
| 175351 | WCP 20 | SS304+FKM+PTFE | 80 | 100 | 10 | A RICHIESTA |
| 175352 | WCP 20 | SS304+FKM+PTFE | 85 | 110 | 10 | A RICHIESTA |
| 175353 | WCP 20 | SS304+FKM+PTFE | 90 | 110 | 10 | A RICHIESTA |
| 175354 | WCP 20 | SS304+FKM+PTFE | 95 | 120 | 12 | A RICHIESTA |
| 175355 | WCP 20 | SS304+FKM+PTFE | 100 | 120 | 12 | A RICHIESTA |
| 175356 | WCP 20 | SS304+FKM+PTFE | 100 | 130 | 12 | A RICHIESTA |
| 175357 | WCP 20 | SS304+FKM+PTFE | 110 | 130 | 12 | A RICHIESTA |
| 175358 | WCP 20 | SS304+FKM+PTFE | 115 | 140 | 12 | A RICHIESTA |
| 175359 | WCP 20 | SS304+FKM+PTFE | 120 | 140 | 12 | A RICHIESTA |
| 175360 | WCP 20 | SS304+FKM+PTFE | 125 | 150 | 12 | A RICHIESTA |

CARCASSA ACCIAIO INOX SS 304
ELEMENTO ENERGIZZANTE: FKM
LABBRO DI TENUTA PTFE/CARBONE

# Boccole di scorrimento

SS 304

WSH-R

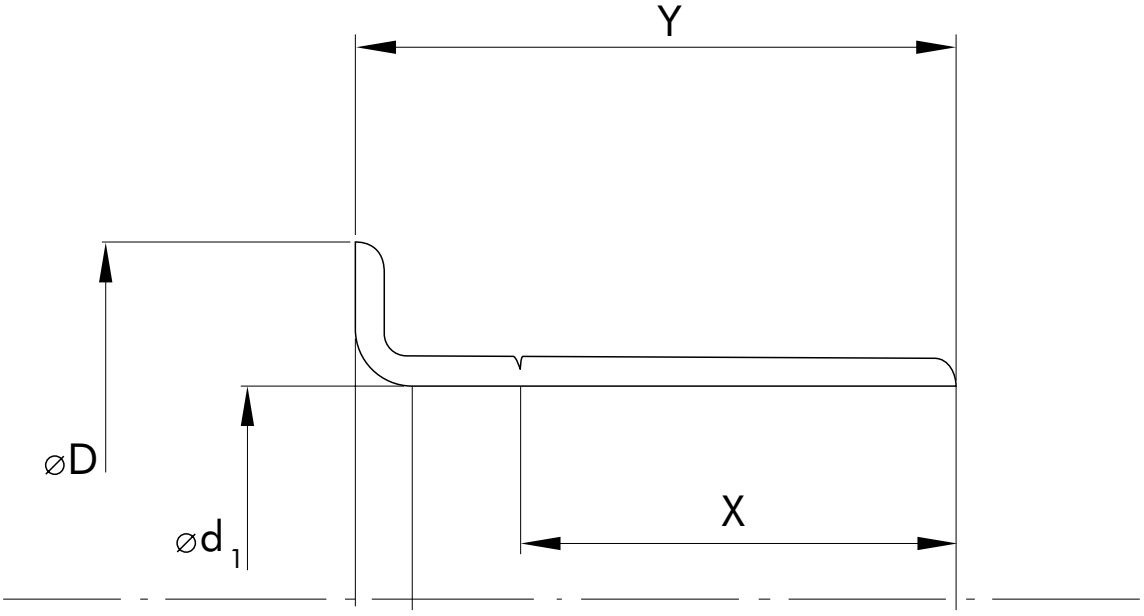
Y
⌀D
⌀d 1
X

| CODICE | RIF. | TIPO | d1 mm | D mm | X mm | Y mm | LISTINO 5-2016 X 100 € |
|---|---|---|---|---|---|---|---|
| 176631 | 99049 | WSH | 12 | 15,5 | 6 | 8,4 | 3.208,23 |
| 179404 | 99055 | WSH | 14 | 19,1 | 6,3 | 9,9 | 3.672,50 |
| 192886 | 99056 | WSH | 14,3 | 19,1 | 6,3 | 9,9 | 3.208,94 |
| 176633 | 99059 | WSH | 15 | 19,1 | 5 | 9 | 2.903,39 |
| 179405 | 99062 | WSH | 15,88 | 19,1 | 8 | 10,3 | 3.672,50 |
| 176632 | 99058 | WSH | 16 | 18,2 | 8 | 11,1 | 3.047,21 |
| 176634 | 99068 | WSH | 17 | 22,2 | 8 | 11 | 3.044,46 |
| 192887 | 99060 | WSH | 17,37 | 22,7 | 8 | 11,1 | 3.208,94 |
| 176637 | 99082 | WSH | 17,93 | 24,4 | 8 | 11 | 3.056,14 |
| 176635 | 99076 | WSH | 19,05 | 24 | 8 | 11,1 | 3.208,78 |
| 192889 | 99080 | WSH | 19,84 | 23,8 | 8 | 11,1 | 3.208,94 |
| 176636 | 99078 | WSH | 20 | 23,6 | 8 | 11 | 2.962,17 |
| 192891 | 99086 | WSH | 21,82 | 29,3 | 6,3 | 9,5 | 3.209,04 |
| 176638 | 99084 | WSH | 22 | 30,2 | 6,6 | 9,1 | 3.354,98 |
| 176639 | 99085 | WSH | 22 | 30,2 | 8 | 12 | 3.307,86 |
| 192892 | 99087 | WSH | 22,23 | 27,8 | 8 | 11,1 | 3.208,94 |
| 115928 | 99082 | WSH | 24 | 28,7 | 8 | 11,1 | 3.081,82 |
| 192894 | 99094 | WSH | 24,6 | 28,7 | 8 | 11,1 | 3.208,94 |
| 192896 | 99096 | WSH | 24,6 | 28,7 | 15,9 | 18,3 | 3.208,94 |
| 150801 | 99098 | WSH | 25 | 33 | 8 | 11 | 3.182,21 |
| 176640 | 99100 | WSH | 25,4 | 31 | 8 | 11,1 | 3.057,92 |
| 176641 | 99103 | WSH | 26,01 | 33,4 | 8 | 12 | 3.316,86 |
| 192897 | 99106 | WSH | 27 | 33,5 | 8 | 11,1 | 3.409,92 |
| 192898 | 99108 | WSH | 27,66 | 35,7 | 8 | 11,1 | 3.316,81 |
| 117578 | 99111 | WSH | 28 | 34,9 | 9,5 | 12,7 | 3.316,38 |
| 192900 | 99112 | WSH | 28,58 | 38,1 | 8 | 11,1 | 3.316,81 |
| 179357 | 99116 | WSH | 28,58 | 38,1 | 9,5 | 12,7 | 3.800,91 |
| 176644 | 99120 | WSH | 29,36 | 34,3 | 9,5 | 12,7 | 3.345,06 |
| 176645 | 99122 | WSH | 29,85 | 35,6 | 8 | 11,1 | 3.344,19 |
| 176642 | 99114 | WSH | 30 | 35,6 | 8 | 11 | 3.052,93 |
| 176643 | 99118 | WSH | 30,18 | 35,6 | 8 | 11,1 | 3.826,59 |
| 192902 | 99141 | WSH | 31,5 | 39,1 | 8 | 11,1 | 3.370,74 |
| 176646 | 99125 | WSH | 31,8 | 38,1 | 8 | 11,1 | 3.266,94 |
| 176647 | 99128 | WSH | 32 | 38,1 | 8 | 11,1 | 3.178,13 |
| 176648 | 99131 | WSH | 33,35 | 40,5 | 12,7 | 15,9 | 3.494,66 |
| 192903 | 99129 | WSH | 33,35 | 40,6 | 6,3 | 9,5 | 3.478,60 |
| 192904 | 99134 | WSH | 34,01 | 41,3 | 12,7 | 15,9 | 3.478,60 |
| 192905 | 99133 | WSH | 34,93 | 41,6 | 8 | 11,1 | 3.478,72 |
| 176649 | 99138 | WSH | 34,93 | 41,6 | 12,7 | 15,9 | 3.478,46 |
| 176650 | 99139 | WSH | 34,93 | 41,6 | 13 | 16 | 3.209,65 |
| 176651 | 99146 | WSH | 36 | 45,2 | 13 | 17 | 3.694,41 |
| 192906 | 99144 | WSH | 36,53 | 45,2 | 9,5 | 12,7 | 3.694,33 |
| 176652 | 99147 | WSH | 38 | 45,2 | 13 | 17 | 3.693,69 |
| 176653 | 99150 | WSH | 38,1 | 45,2 | 9,5 | 12,7 | 3.696,00 |
| 179406 | 99149 | WSH | 38,1 | 45,2 | 14,3 | 17,5 | 4.211,82 |
| 179358 | 99152 | WSH | 38,68 | 47,2 | 11,1 | 14,3 | 4.495,42 |
| 176655 | 99155 | WSH | 39,42 | 47,2 | 11,1 | 14,3 | 3.499,40 |
| 179407 | 99156 | WSH | 39,7 | 47,2 | 14,3 | 17,5 | 4.557,41 |
| 176654 | 99153 | WSH | 40 | 46,9 | 9,9 | 12,9 | 3.612,07 |

| CODICE | RIF. | TIPO | d1 mm | D mm | X mm | Y mm | LISTINO 5-2016 X 100 € |
|---|---|---|---|---|---|---|---|
| 27897 | 99157 | WSH | 40,08 | 47 | 13 | 16 | 3.506,66 |
| 176656 | 99163 | WSH | 41 | 49,2 | 12,7 | 15,9 | 4.340,23 |
| 192907 | 99162 | WSH | 41,28 | 47,6 | 14,3 | 17,5 | 3.883,09 |
| 176658 | 99166 | WSH | 41,9 | 53 | 11,3 | 14,5 | 4.522,85 |
| 176660 | 99169 | WSH | 41,9 | 53 | 14,3 | 17,5 | 3.962,00 |
| 176657 | 99165 | WSH | 42,06 | 53 | 14 | 17,5 | 3.646,82 |
| 176659 | 99168 | WSH | 42,88 | 48,4 | 14,3 | 17,5 | 3.900,21 |
| 192908 | 99182 | WSH | 43 | 48,4 | 12,7 | 15,9 | 3.883,09 |
| 176662 | 99171 | WSH | 43,66 | 51,6 | 14,3 | 17,5 | 4.003,51 |
| 176661 | 99170 | WSH | 44,17 | 52,4 | 9,5 | 12,7 | 3.947,20 |
| 192909 | 99172 | WSH | 44,45 | 52,2 | 9,5 | 12,7 | 3.963,99 |
| 192911 | 99180 | WSH | 44,45 | 52,4 | 13,5 | 15,9 | 3.963,99 |
| 179408 | 99174 | WSH | 44,45 | 52,4 | 14,3 | 17,5 | 4.741,73 |
| 192910 | 99175 | WSH | 44,45 | 52,4 | 19,1 | 22,2 | 3.963,90 |
| 176665 | 99176 | WSH | 44,86 | 52,4 | 14,3 | 17,5 | 3.946,59 |
| 176666 | 99177 | WSH | 45 | 53 | 14 | 17 | 3.635,92 |
| 192912 | 99179 | WSH | 45,24 | 54 | 16,9 | 20,3 | 3.990,95 |
| 176667 | 99181 | WSH | 46,05 | 53,1 | 14,3 | 17,5 | 4.009,95 |
| 192913 | 99185 | WSH | 47,22 | 54,8 | 14,3 | 17,5 | 4.125,78 |
| 192914 | 99186 | WSH | 47,45 | 55,6 | 22,6 | 26 | 4.125,78 |
| 192915 | 99187 | WSH | 47,63 | 56 | 14,3 | 17,5 | 4.126,04 |
| 176668 | 99189 | WSH | 48,03 | 56 | 14 | 17 | 4.126,39 |
| 192916 | 99193 | WSH | 49,23 | 56,4 | 14,3 | 17,5 | 4.179,83 |
| 176669 | 99196 | WSH | 50 | 57 | 14 | 17 | 3.883,10 |
| 176670 | 99198 | WSH | 50,3 | 58,8 | 14,3 | 17,9 | 4.128,48 |
| 176671 | 99199 | WSH | 50,8 | 61,1 | 14,3 | 17,5 | 5.207,33 |
| 179409 | 99204 | WSH | 52 | 62,7 | 12,7 | 15,9 | 5.338,39 |
| 176672 | 99210 | WSH | 53,98 | 61,5 | 12,7 | 19,1 | 4.500,27 |
| 179410 | 99212 | WSH | 53,98 | 61,5 | 19,8 | 23,8 | 5.339,30 |
| 176673 | 99215 | WSH | 55 | 62 | 20 | 23 | 4.101,87 |
| 179411 | 99220 | WSH | 56 | 64,3 | 12,7 | 15,9 | 5.336,55 |
| 176674 | 99227 | WSH | 57,15 | 64,3 | 8 | 11,1 | 4.498,45 |
| 179412 | 99225 | WSH | 57,15 | 64,3 | 19,8 | 23,8 | 5.110,68 |
| 176675 | 99233 | WSH | 59,13 | 69,8 | 19,1 | 22,2 | 4.659,51 |
| 176677 | 99241 | WSH | 60 | 70,7 | 9,4 | 11,4 | 4.447,01 |
| 116814 | 99235 | WSH | 60 | 70,7 | 20 | 23 | 4.449,34 |
| 176676 | 99240 | WSH | 60,33 | 69,8 | 13,4 | 17,4 | 4.713,91 |
| 192917 | 99243 | WSH | 61,92 | 71,8 | 19,8 | 23,8 | 4.746,00 |
| 179413 | 99242 | WSH | 61,93 | 71,8 | 12,7 | 15,9 | 5.701,36 |
| 176678 | 99244 | WSH | 62 | 71,8 | 12,7 | 15,9 | 4.745,39 |
| 192918 | 99250 | WSH | 63,5 | 71,6 | 19,8 | 23,8 | 4.746,00 |
| 192919 | 99251 | WSH | 63,91 | 71,8 | 19,8 | 23 | 4.799,93 |
| 176679 | 99254 | WSH | 65 | 72,4 | 20 | 23 | 4.584,20 |
| 176680 | 99256 | WSH | 65,1 | 73,4 | 19,8 | 23,8 | 4.784,59 |
| 189654 | 99259 | WSH | 66 | 76 | 19,8 | 23,8 | 5.906,82 |
| 176681 | 99266 | WSH | 68 | 79,4 | 19,1 | 22,2 | 4.716,89 |
| 176683 | 99272 | WSH | 69,85 | 79,4 | 10,3 | 14,3 | 4.935,07 |
| 176684 | 99274 | WSH | 69,85 | 79,4 | 19,8 | 23,79 | 4.943,75 |
| 176685 | 99275 | WSH | 69,85 | 79,4 | 19,8 | 23,8 | 4.934,71 |

| CODICE | RIF. | TIPO | d1 mm | D mm | X mm | Y mm | LISTINO 5-2016 X 100 € |
|---|---|---|---|---|---|---|---|
| 176682 | 99269 | WSH | 69,85 | 79,4 | 28,6 | 31,8 | 4.930,91 |
| 176686 | 99276 | WSH | 70 | 79,4 | 20 | 24 | 4.719,08 |
| 176687 | 99281 | WSH | 71,45 | 81 | 15,1 | 17,5 | 5.102,65 |
| 176688 | 99284 | WSH | 72 | 81,9 | 19,1 | 22,2 | 6.074,43 |
| 192920 | 99293 | WSH | 74,63 | 84,9 | 19,8 | 23,8 | 5.150,60 |
| 176689 | 99289 | WSH | 75 | 83,1 | 15,1 | 17,5 | 5.149,20 |
| 176690 | 99294 | WSH | 75 | 84 | 22 | 26 | 4.907,75 |
| 176691 | 99298 | WSH | 76,02 | 85,3 | 14,3 | 17,5 | 6.009,55 |
| 189652 | 99306 | WSH | 78 | 88 | 19,1 | 22,2 | 6.336,99 |
| 176692 | 99311 | WSH | 79,38 | 89,7 | 17,5 | 20,6 | 4.902,72 |
| 116813 | 99313 | WSH | 79,91 | 89,9 | 19,1 | 22,5 | 5.302,84 |
| 176694 | 99317 | WSH | 80 | 90 | 11 | 15 | 4.931,18 |
| 176693 | 99315 | WSH | 80 | 90 | 21 | 24 | 5.069,61 |
| 192921 | 99322 | WSH | 82,55 | 91,3 | 20,6 | 25,4 | 5.851,60 |
| 176695 | 99331 | WSH | 84,07 | 93,7 | 20,6 | 25,4 | 5.542,09 |
| 176696 | 99332 | WSH | 84,89 | 94 | 17 | 21 | 6.010,47 |
| 121330 | 99333 | WSH | 84,89 | 94 | 21 | 25 | 5.743,80 |
| 176697 | 99334 | WSH | 85 | 90,9 | 10,1 | 12,7 | 5.322,63 |
| 179414 | 99350 | WSH | 88,9 | 97,6 | 20,6 | 25,4 | 7.062,50 |
| 176699 | 99352 | WSH | 90 | 101,6 | 11,1 | 13,7 | 7.162,57 |
| 176700 | 99353 | WSH | 90 | 101,6 | 13,4 | 16,9 | 6.627,34 |
| 176698 | 99351 | WSH | 90 | 101,6 | 18 | 23 | 7.173,10 |
| 125861 | 99354 | WSH | 90 | 101,6 | 23 | 28 | 6.822,20 |
| 192922 | 99362 | WSH | 92,08 | 102,4 | 20,6 | 25,4 | 7.172,93 |
| 179415 | 99366 | WSH | 94,74 | 102,2 | 19,8 | 23 | 8.269,55 |
| 117579 | 99369 | WSH | 95 | 102,2 | 21 | 24 | 7.227,60 |
| 176702 | 99374 | WSH | 95 | 102,4 | 8,7 | 12,7 | 8.642,72 |
| 176701 | 99364 | WSH | 95 | 102,5 | 11,9 | 15,1 | 7.226,76 |
| 179416 | 99372 | WSH | 95,25 | 102,1 | 17,5 | 22,2 | 8.269,55 |
| 179417 | 99376 | WSH | 95,25 | 102,2 | 14,3 | 17,5 | 8.269,55 |
| 176703 | 99393 | WSH | 100 | 109,5 | 20,6 | 25,4 | 7.813,69 |
| 176704 | 99399 | WSH | 101,6 | 111,1 | 20,6 | 25,4 | 7.929,15 |
| 192923 | 99412 | WSH | 104,78 | 113,5 | 20,6 | 25,4 | 7.900,94 |
| 117580 | 99413 | WSH | 105 | 113,5 | 20 | 23,2 | 7.901,19 |
| 176705 | 99435 | WSH | 109,93 | 125 | 12,9 | 16,5 | 6.303,72 |
| 189653 | 99434 | WSH | 110 | 125 | 11,4 | 15 | 9.648,40 |
| 124968 | 99452 | WSH | 115 | 127 | 20,6 | 23,8 | 8.058,35 |
| 176706 | 99463 | WSH | 117,5 | 128,6 | 25,4 | 31,8 | 8.526,36 |
| 192924 | 99471 | WSH | 120 | 129,8 | 8 | 11 | 8.817,85 |
| 176707 | 99473 | WSH | 120 | 129,8 | 20 | 25 | 8.817,12 |
| 176708 | 99475 | WSH | 120,65 | 127 | 12,7 | 19,1 | 10.092,95 |
| 176709 | 99490 | WSH | 125 | 137,2 | 10 | 14 | 10.050,96 |
| 176710 | 99492 | WSH | 125 | 137,2 | 26 | 32 | 9.289,63 |
| 179418 | 99498 | WSH | 127 | 137,2 | 17,5 | 22,2 | 11.582,50 |
| 176711 | 99494 | WSH | 129,9 | 139,5 | 19,1 | 23,8 | 9.248,01 |
| 135280 | 99491 | WSH | 130,18 | 139,5 | 22 | 25,3 | 10.139,12 |
| 189651 | 99525 | WSH | 133,35 | 141,2 | 20,6 | 25,4 | 12.378,64 |
| 192925 | 99533 | WSH | 134,95 | 145,7 | 20,5 | 25,4 | 13.942,15 |
| 176712 | 99552 | WSH | 140 | 151 | 20,5 | 25,4 | 10.919,91 |

| CODICE | RIF. | TIPO | d1 mm | D mm | X mm | Y mm | LISTINO 5-2016 X 100 € |
|---|---|---|---|---|---|---|---|
| 176713 | 99571 | WSH | 145 | 154,9 | 19,1 | 22,2 | 15.397,86 |
| 176714 | 99595 | WSH | 150 | 159 | 26 | 30 | 12.950,21 |
| 192926 | 99599 | WSH | 152,4 | 161,9 | 25,4 | 31,8 | 17.905,62 |
| 192927 | 99606 | WSH | 154,86 | 167 | 26 | 30 | 19.199,73 |
| 176715 | 99630 | WSH | 160 | 171,4 | 25,4 | 31,8 | 16.173,17 |
| 177820 | 99640 | WSH | 169,88 | 182,6 | 31,8 | 38 | 17.171,91 |
| 176716 | 99675 | WSH | 171,45 | 181 | 20,6 | 27 | 19.723,64 |
| 192928 | 99687 | WSH | 175,01 | 187 | 28 | 32 | 20.925,55 |
| 176717 | 99700 | WSH | 177,8 | 189,9 | 25,4 | 31,8 | 17.636,99 |
| 176718 | 99721 | WSH | 180,01 | 190,5 | 33 | 38 | 16.757,30 |
| 176719 | 99726 | WSH | 184,86 | 197,1 | 32 | 38 | 18.724,99 |
| 179419 | 99745 | WSH | 189,31 | 199,6 | 20,6 | 25,4 | 21.238,86 |
| 176720 | 99750 | WSH | 190,5 | 200 | 20,6 | 25,4 | 21.495,68 |
| 176721 | 99787 | WSH | 200,03 | 212,7 | 34,5 | 38,1 | 19.712,20 |

# V-Ring

FKM 60

VR VA
VR VL
VR VS

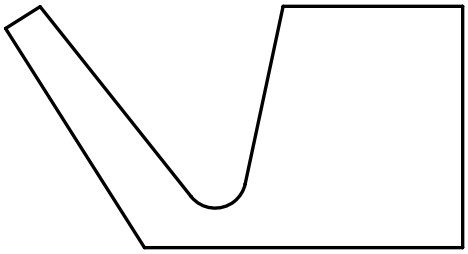

VA

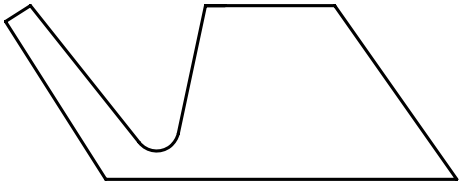

VS

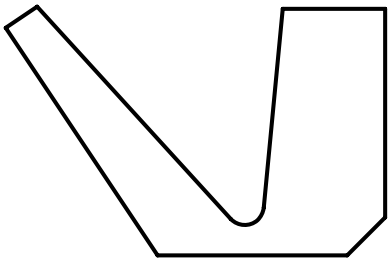

VL

| CODICE | TIPO | MAT. | SPEC. | DIAMETRO NOMINALE ALBERO d mm | LISTINO 5-2016 X 1 PCS € |
|---|---|---|---|---|---|
| 62133 | VR | FKM | VA | 3 | 0,99 |
| 62134 | VR | FKM | VA | 4 | 0,99 |
| 44103 | VR | FKM | VA | 5 | 0,99 |
| 62135 | VR | FKM | VA | 6 | 0,99 |
| 62136 | VR | FKM | VA | 7 | 1,06 |
| 62137 | VR | FKM | VA | 8 | 1,06 |
| 37437 | VR | FKM | VA | 10 | 1,13 |
| 62138 | VR | FKM | VA | 12 | 1,55 |
| 62139 | VR | FKM | VA | 14 | 1,69 |
| 56127 | VR | FKM | VA | 16 | 2,04 |
| 36036 | VR | FKM | VA | 18 | 2,23 |
| 39208 | VR | FKM | VA | 20 | 2,32 |
| 62140 | VR | FKM | VA | 22 | 2,60 |
| 36553 | VR | FKM | VA | 25 | 2,67 |
| 37602 | VR | FKM | VA | 28 | 3,03 |
| 49455 | VR | FKM | VA | 30 | 3,25 |
| 62141 | VR | FKM | VA | 32 | 3,59 |
| 62142 | VR | FKM | VA | 35 | 3,59 |
| 62143 | VR | FKM | VA | 38 | 3,80 |
| 36931 | VR | FKM | VA | 40 | 4,36 |
| 44692 | VR | FKM | VA | 45 | 5,98 |
| 22379 | VR | FKM | VA | 50 | 6,14 |
| 56950 | VR | FKM | VA | 55 | 6,97 |
| 36555 | VR | FKM | VA | 60 | 7,04 |
| 37455 | VR | FKM | VA | 65 | 7,46 |
| 35344 | VR | FKM | VA | 70 | 9,15 |
| 35345 | VR | FKM | VA | 75 | 9,83 |
| 37260 | VR | FKM | VA | 80 | 11,12 |
| 35610 | VR | FKM | VA | 85 | 12,04 |
| 37459 | VR | FKM | VA | 90 | 12,88 |
| 35488 | VR | FKM | VA | 95 | 13,87 |
| 34854 | VR | FKM | VA | 100 | 14,74 |
| 36932 | VR | FKM | VA | 110 | 20,62 |
| 35613 | VR | FKM | VA | 120 | 21,05 |
| 37964 | VR | FKM | VA | 130 | 21,19 |
| 44693 | VR | FKM | VA | 140 | 24,28 |
| 22378 | VR | FKM | VA | 150 | 25,69 |
| 55879 | VR | FKM | VA | 160 | 38,99 |
| 24715 | VR | FKM | VA | 170 | 39,84 |
| 35109 | VR | FKM | VA | 180 | 42,61 |
| 37965 | VR | FKM | VA | 190 | 44,20 |
| 37427 | VR | FKM | VA | 199 | 50,89 |
| 36916 | VR | FKM | VA | 200 | 112,61 |
| 34919 | VR | FKM | VA | 220 | 116,06 |
| 36654 | VR | FKM | VA | 250 | 120,99 |
| 41577 | VR | FKM | VA | 275 | 151,19 |
| 36653 | VR | FKM | VA | 300 | 174,14 |
| 40235 | VR | FKM | VA | 325 | 188,78 |
| 70444 | VR | FKM | VA | 350 | 203,21 |

| CODICE | TIPO | MAT. | SPEC. | DIAMETRO NOMINALE ALBERO d mm | LISTINO 5-2016 X 1 PCS € |
|---|---|---|---|---|---|
| 29726 | VR | FKM | VL | 120 | 24,64 |
| 45815 | VR | FKM | VL | 130 | 26,32 |
| 44405 | VR | FKM | VL | 140 | 26,32 |
| 72420 | VR | FKM | VL | 150 | 27,59 |
| 81930 | VR | FKM | VL | 160 | 30,62 |
| 65690 | VR | FKM | VL | 170 | 31,98 |
| 78092 | VR | FKM | VL | 180 | 33,57 |
| 74006 | VR | FKM | VL | 190 | 45,54 |
| 81535 | VR | FKM | VL | 200 | 49,55 |
| 35519 | VR | FKM | VL | 220 | 52,96 |
| 35290 | VR | FKM | VL | 250 | 58,91 |
| 36369 | VR | FKM | VL | 275 | 64,61 |
| 37466 | VR | FKM | VL | 300 | 67,64 |
| 78093 | VR | FKM | VL | 325 | 74,40 |
| 74053 | VR | FKM | VL | 350 | 87,49 |
| 37417 | VR | FKM | VL | 400 | 105,01 |
| 76766 | VR | FKM | VL | 425 | 105,02 |
| 37418 | VR | FKM | VL | 450 | 111,94 |
| 45817 | VR | FKM | VL | 500 | 134,72 |

| CODICE | TIPO | MAT. | SPEC. | DIAMETRO NOMINALE ALBERO d mm | LISTINO 5-2016 X 1 PCS € |
|---|---|---|---|---|---|
| 62147 | VR | FKM | VS | 6 | 1,27 |
| 27704 | VR | FKM | VS | 7 | 1,26 |
| 26256 | VR | FKM | VS | 10 | 1,27 |
| 62149 | VR | FKM | VS | 12 | 1,27 |
| 62150 | VR | FKM | VS | 14 | 2,04 |
| 62151 | VR | FKM | VS | 16 | 2,25 |
| 26255 | VR | FKM | VS | 18 | 3,31 |
| 37062 | VR | FKM | VS | 20 | 3,55 |
| 62152 | VR | FKM | VS | 22 | 4,15 |
| 36554 | VR | FKM | VS | 25 | 4,41 |
| 42591 | VR | FKM | VS | 28 | 4,79 |
| 38226 | VR | FKM | VS | 30 | 5,06 |
| 62153 | VR | FKM | VS | 32 | 5,42 |
| 34911 | VR | FKM | VS | 35 | 5,54 |
| 59658 | VR | FKM | VS | 38 | 5,66 |
| 21550 | VR | FKM | VS | 40 | 5,77 |
| 34912 | VR | FKM | VS | 45 | 6,12 |
| 34913 | VR | FKM | VS | 50 | 6,55 |
| 34917 | VR | FKM | VS | 55 | 7,46 |
| 36556 | VR | FKM | VS | 60 | 7,46 |
| 21552 | VR | FKM | VS | 65 | 8,73 |
| 34855 | VR | FKM | VS | 70 | 11,54 |
| 37456 | VR | FKM | VS | 75 | 12,04 |
| 21551 | VR | FKM | VS | 80 | 13,58 |
| 37457 | VR | FKM | VS | 85 | 14,64 |
| 37458 | VR | FKM | VS | 90 | 15,63 |
| 37460 | VR | FKM | VS | 95 | 21,54 |
| 35611 | VR | FKM | VS | 100 | 21,60 |
| 21553 | VR | FKM | VS | 110 | 21,75 |
| 37461 | VR | FKM | VS | 120 | 28,08 |
| 37952 | VR | FKM | VS | 130 | 31,67 |
| 27482 | VR | FKM | VS | 140 | 32,50 |
| 57013 | VR | FKM | VS | 150 | 35,62 |
| 24376 | VR | FKM | VS | 160 | 49,83 |
| 36043 | VR | FKM | VS | 170 | 49,83 |
| 35952 | VR | FKM | VS | 180 | 54,48 |
| 37426 | VR | FKM | VS | 190 | 54,83 |
| 36044 | VR | FKM | VS | 199 | 59,55 |

# V-Ring

NBR 60

VR VA
VR VL
VR VS

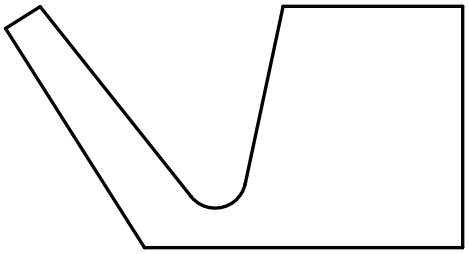

VA

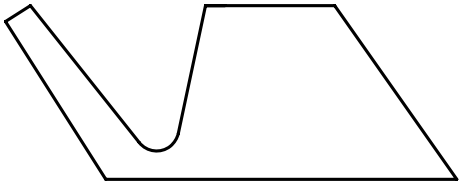

VS

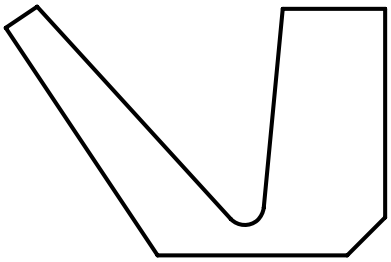

VL

| CODICE | TIPO | MAT. | SPEC. | DIAMETRO NOMINALE ALBERO d mm | LISTINO 5-2016 x 100 pz € |
|---|---|---|---|---|---|
| 123483 | VR | NBR | VA | 3 | 31,69 |
| 123484 | VR | NBR | VA | 4 | 33,33 |
| 123485 | VR | NBR | VA | 5 | 34,96 |
| 123486 | VR | NBR | VA | 6 | 36,61 |
| 123487 | VR | NBR | VA | 7 | 38,24 |
| 123488 | VR | NBR | VA | 8 | 39,88 |
| 123489 | VR | NBR | VA | 10 | 41,52 |
| 123490 | VR | NBR | VA | 12 | 43,16 |
| 123491 | VR | NBR | VA | 14 | 44,79 |
| 123492 | VR | NBR | VA | 16 | 46,44 |
| 123493 | VR | NBR | VA | 18 | 48,07 |
| 123494 | VR | NBR | VA | 20 | 56,10 |
| 123495 | VR | NBR | VA | 22 | 60,29 |
| 123496 | VR | NBR | VA | 25 | 62,56 |
| 123497 | VR | NBR | VA | 28 | 74,42 |
| 123498 | VR | NBR | VA | 30 | 76,70 |
| 123499 | VR | NBR | VA | 32 | 80,25 |
| 123500 | VR | NBR | VA | 35 | 84,44 |
| 123501 | VR | NBR | VA | 38 | 89,91 |
| 123502 | VR | NBR | VA | 40 | 97,30 |
| 123503 | VR | NBR | VA | 45 | 99,58 |
| 123504 | VR | NBR | VA | 50 | 115,25 |
| 123505 | VR | NBR | VA | 55 | 116,90 |
| 123506 | VR | NBR | VA | 60 | 131,94 |
| 123507 | VR | NBR | VA | 65 | 134,85 |
| 123508 | VR | NBR | VA | 70 | 149,90 |
| 123509 | VR | NBR | VA | 75 | 167,50 |
| 123510 | VR | NBR | VA | 80 | 179,99 |
| 123511 | VR | NBR | VA | 85 | 198,87 |
| 123512 | VR | NBR | VA | 90 | 201,15 |
| 123513 | VR | NBR | VA | 95 | 209,81 |
| 123514 | VR | NBR | VA | 100 | 213,36 |
| 123515 | VR | NBR | VA | 110 | 280,76 |
| 123516 | VR | NBR | VA | 120 | 295,81 |
| 123517 | VR | NBR | VA | 130 | 328,73 |
| 123518 | VR | NBR | VA | 140 | 336,11 |
| 123519 | VR | NBR | VA | 150 | 343,50 |
| 123520 | VR | NBR | VA | 160 | 433,88 |
| 123521 | VR | NBR | VA | 170 | 451,48 |
| 123522 | VR | NBR | VA | 180 | 495,89 |
| 123523 | VR | NBR | VA | 190 | 516,05 |
| 123524 | VR | NBR | VA | 199 | 565,57 |
| 123525 | VR | NBR | VA | 200 | 1.281,64 |
| 123526 | VR | NBR | VA | 220 | 1.403,94 |
| 123527 | VR | NBR | VA | 250 | 1.500,71 |
| 123528 | VR | NBR | VA | 275 | 1.744,32 |
| 123529 | VR | NBR | VA | 300 | 1.796,40 |
| 123530 | VR | NBR | VA | 325 | 2.065,55 |
| 123531 | VR | NBR | VA | 350 | 2.245,31 |

| CODICE | TIPO | MAT. | SPEC. | DIAMETRO NOMINALE ALBERO d mm | LISTINO 5-2016 x 100 pz € |
|---|---|---|---|---|---|
| 123532 | VR | NBR | VA | 375 | 3.497,68 |
| 123533 | VR | NBR | VA | 400 | 4.098,83 |
| 123534 | VR | NBR | VA | 450 | 4.597,82 |
| 123535 | VR | NBR | VA | 500 | 6.309,87 |
| 123536 | VR | NBR | VA | 550 | 6.604,56 |
| 123537 | VR | NBR | VA | 600 | 8.176,15 |
| 26264 | VR | NBR | VA | 650 | 9.018,38 |
| 27384 | VR | NBR | VA | 700 | 19.317,01 |
| 26265 | VR | NBR | VA | 725 | 22.663,54 |
| 175707 | VR | NBR | VA | 750 | 25.445,97 |
| 16684 | VR | NBR | VA | 800 | 28.592,86 |
| 16685 | VR | NBR | VA | 850 | 35.039,48 |
| 26266 | VR | NBR | VA | 900 | 25.941,93 |
| 35010 | VR | NBR | VA | 950 | 37.628,55 |
| 27473 | VR | NBR | VA | 1000 | 40.397,17 |
| 35045 | VR | NBR | VA | 1100 | 46.865,49 |
| 69606 | VR | NBR | VA | 1200 | 51.281,62 |

| CODICE | TIPO | MAT. | SPEC. | DIAMETRO NOMINALE ALBERO d mm | LISTINO 5-2016 x 100 pz € |
|---|---|---|---|---|---|
| 123568 | VR | NBR | VL | 110 | 352,33 |
| 123569 | VR | NBR | VL | 120 | 352,35 |
| 123570 | VR | NBR | VL | 130 | 370,58 |
| 123571 | VR | NBR | VL | 140 | 381,32 |
| 123572 | VR | NBR | VL | 150 | 408,11 |
| 123573 | VR | NBR | VL | 160 | 425,09 |
| 123574 | VR | NBR | VL | 170 | 466,56 |
| 123575 | VR | NBR | VL | 180 | 472,23 |
| 123576 | VR | NBR | VL | 190 | 562,07 |
| 123577 | VR | NBR | VL | 200 | 1.228,27 |
| 123578 | VR | NBR | VL | 220 | 1.240,08 |
| 123579 | VR | NBR | VL | 250 | 1.413,61 |
| 123580 | VR | NBR | VL | 275 | 1.590,02 |
| 123581 | VR | NBR | VL | 300 | 1.767,01 |
| 123582 | VR | NBR | VL | 325 | 2.028,76 |
| 123583 | VR | NBR | VL | 350 | 2.220,62 |
| 123584 | VR | NBR | VL | 375 | 2.454,72 |
| 123585 | VR | NBR | VL | 400 | 2.650,81 |
| 123586 | VR | NBR | VL | 425 | 3.027,34 |
| 123587 | VR | NBR | VL | 450 | 3.162,20 |
| 123588 | VR | NBR | VL | 500 | 3.777,72 |
| 123589 | VR | NBR | VL | 550 | 4.943,42 |
| 123590 | VR | NBR | VL | 600 | 5.046,31 |
| 123591 | VR | NBR | VL | 650 | 8.267,34 |
| 123592 | VR | NBR | VL | 700 | 16.501,57 |

| CODICE | TIPO | MAT. | SPEC. | DIAMETRO NOMINALE ALBERO d mm | LISTINO 5-2016 X 100 pz € |
|---|---|---|---|---|---|
| 123597 | VR | NBR | VS | 5 | 31,87 |
| 123598 | VR | NBR | VS | 6 | 31,87 |
| 123599 | VR | NBR | VS | 7 | 32,54 |
| 123600 | VR | NBR | VS | 8 | 33,20 |
| 123601 | VR | NBR | VS | 10 | 33,87 |
| 123602 | VR | NBR | VS | 12 | 35,20 |
| 123603 | VR | NBR | VS | 14 | 39,84 |
| 123604 | VR | NBR | VS | 16 | 41,17 |
| 123605 | VR | NBR | VS | 18 | 45,82 |
| 123606 | VR | NBR | VS | 20 | 50,46 |
| 123607 | VR | NBR | VS | 22 | 62,42 |
| 123608 | VR | NBR | VS | 25 | 66,40 |
| 123609 | VR | NBR | VS | 28 | 69,73 |
| 123610 | VR | NBR | VS | 30 | 73,04 |
| 123611 | VR | NBR | VS | 32 | 81,01 |
| 123612 | VR | NBR | VS | 35 | 84,99 |
| 123613 | VR | NBR | VS | 38 | 92,96 |
| 123614 | VR | NBR | VS | 40 | 96,94 |
| 123615 | VR | NBR | VS | 45 | 100,93 |
| 123616 | VR | NBR | VS | 50 | 104,91 |
| 123617 | VR | NBR | VS | 55 | 107,57 |
| 123618 | VR | NBR | VS | 60 | 122,17 |
| 123619 | VR | NBR | VS | 65 | 124,17 |
| 123620 | VR | NBR | VS | 70 | 143,42 |
| 123621 | VR | NBR | VS | 75 | 160,69 |
| 123622 | VR | NBR | VS | 80 | 167,33 |
| 123623 | VR | NBR | VS | 85 | 169,98 |
| 123624 | VR | NBR | VS | 90 | 172,64 |
| 123625 | VR | NBR | VS | 95 | 179,28 |
| 123626 | VR | NBR | VS | 100 | 212,48 |
| 123627 | VR | NBR | VS | 110 | 294,81 |
| 123628 | VR | NBR | VS | 120 | 345,27 |
| 123629 | VR | NBR | VS | 130 | 351,91 |
| 123630 | VR | NBR | VS | 140 | 371,83 |
| 123631 | VR | NBR | VS | 150 | 385,11 |
| 123632 | VR | NBR | VS | 160 | 537,83 |
| 123633 | VR | NBR | VS | 170 | 564,39 |
| 123634 | VR | NBR | VS | 180 | 584,31 |
| 123635 | VR | NBR | VS | 190 | 590,95 |
| 123636 | VR | NBR | VS | 199 | 610,87 |

# MOVIMENTI ALTERNATIVI

ANELLO GUIDA PISTONE
ANELLO GUIDA STELO
FASCIA GUIDA
GUARNIZIONE PISTONE
GUARNIZIONE STELO
RASCHIATORE

## GUARNIZIONI PER PISTONE

| Denominazione DICHTOMATIK Corrente | Profilo | Denominazione DICHTOMATIK | Materiale | BUSAK (TSS) | POLYPAC (TSS) | MERKEL | SIMRIT | GUARNITEC | ASTON SEAL | PARKER | HALLITE | SEALING PARTS | GENERICO |
|---|---|---|---|---|---|---|---|---|---|---|---|---|---|
| KNA 28 | | MA 28 | TPU | U-Cup (PUA) | -- | -- | NA 300 | TTE | KD | B T | 606 | RSE | -- |
| KN 25 | | MA 25 | TPU | RUB | MU/P | N 100 | AUN 100 | TTU | UP | G D | 601 | RSS | MAD |
| KNA 23 | | MA 23 | NBR | -- | -- | -- | NA 150 | -- | -- | -- | -- | -- | DE-DEM |
| KN 21 | | MA 21 | NBR | -- | -- | N 100 | N 100 | -- | -- | -- | -- | -- | UM |
| KN 36 | | MA 36 | TPU | -- | EUS | -- | KI 310 | TTS | S | GC | 601 | TS | -- |
| KN 05 | | S 05 | NBR | Balsele B | Balsele B | S 8 | S 8 | TSE | -- | -- | -- | -- | -- |
| KNA 16 | | K 16 | NBR | -- | B/NWO+KR | -- | -- | -- | -- | -- | -- | -- | -- |
| KPOR 31 | | K 31 | PTFE / NBR | STEPSEAL 2K (PSK) | E/GR (Profilo B) | OMK-E | OMK-E | -- | YAB | OG | 355 | -- | -- |
| KPOR 30 | | K 30 | PTFE / NBR | GLYD RING (PG) | E/GR (Profilo A) | OMK-MR | OMK-MR | GER | YB | OE | 54 | PS | -- |
| KPUOR 70 | | -- | TPU / NBR | WYNSEAL | -- | -- | OMK-PU | TTO | KPD | -- | 764 | -- | -- |
| KK 71 | | -- | PTFE | PHD | PHD | -- | L 27 | PDH | KHD | -- | 735 | -- | -- |
| KK 03 | | K 03 | NBR / POM / ELASTOMERO POLIESTERE | DAS | DBM | L 43 | L 43 / SIMKO 5x2 | TPM | KGD (a) | ZS | 54 | DAS | -- |
| KK 22 | | K 22 | TELA IMPREGNATA NBR / POM | DPS (NOTA 1) | DPS (NOTA 1) | SIMKO 320 x2 | SIMKO 320 x2 | TPS / T | -- | -- | -- | -- | -- |
| KK 25 | | K 25 | TELA IMPREGNATA NBR / POM | DPC | DPC | -- | -- | -- | -- | -- | -- | -- | -- |
| KDS 01 | | K 01 | TELA IMPREGNATA NBR | CH | CH | EK | E3 / EK | GT / 9 | -- | M 9 | 51 | -- | -- |
| KNA 44 | | MA 44 | PTFE | VARISEAL M2 (PVA) | -- | -- | FORSEAL FOA | -- | -- | FLEXISEAL JK | -- | -- | -- |

## GUARNIZIONI PER STELO

| Denominazione DICHTOMATIK Corrente | Profilo | Denominazione DICHTOMATIK | Materiale | BUSAK (TSS) | POLYPAC (TSS) | MERKEL | SIMRIT | GUARNITEC | ASTON SEAL | PARKER | HALLITE | SEALING PARTS | GENERICO |
|---|---|---|---|---|---|---|---|---|---|---|---|---|---|
| SN 25 | | MA 25 | TPU | RUB | MU/P | N 100 | AUN 100 | TTU | UP | GD | 601 | RSS | MAD |
| SNI 30 | | MA 30 | TPU | RUO | EU | T 20 | T 20 | TTI | A | B3 | -- | RS | -- |
| SNI 39 | | MA 39 | TPU | RU3 | -- | NI 300 (T 22) | NI 300 | TTI/L | AD | BS | 605 | RS/L | -- |
| SN 21 | | MA 21 | NBR | -- | -- | N 100 | N 100 | -- | -- | -- | -- | -- | UM |
| SNI 24 | | MA 24 | NBR | -- | -- | -- | -- | -- | -- | -- | -- | -- | DI-DIM |
| SN 05 | | S 05 | NBR | Balsele B | Balsele B | S 8 | S 8 | TSE | -- | -- | -- | -- | -- |
| SNI 07 | | S 07 | NBR | Balsele B/NEI | Balsele B/NEI | -- | -- | TSE/AI | -- | -- | -- | -- | -- |
| SN 36 | | MA 36 | TPU | -- | -- | -- | KI 310 | TTS | S | GC | -- | TS | -- |
| SNI 72 | | -- | TPU | -- | -- | -- | SYPRIM SM | -- | -- | -- | -- | -- | -- |
| SPOR 31 | | S 31 | PTFE/NBR | STEPSEAL 2K (RSK) | I/GR (Profilo B) | OMS-MR | OMS-MR | GIR | XB | OD | 16 | -- | -- |
| SPOR 30 | | S 30 | PTFE/NBR | GLYD RING (RG) | I/GR (Profilo A) | -- | -- | -- | XAB | ON | -- | -- | -- |
| SDS 01 3/2 | | S 01 | TELA IMPREGNATA NBR/POM | RCH | CH / G5 | ES | E1 / E2 / ES | GT / 7 | -- | M2 M3 | 11 | -- | -- |
| SDS 01 1/0 | | -- | TELA IMPREGNATA NBR/POM | -- | -- | -- | -- | -- | -- | -- | -- | -- | -- |
| SDR 01 | | -- | TELA IMPREGNATA NBR | -- | -- | -- | -- | -- | -- | -- | -- | -- | -- |
| SNI 43 | | MA 43 | PTFE | VARISEAL M2 (RVA) | -- | -- | FORSEAL FOI | -- | -- | FLEXISEAL JS | -- | -- | -- |

Il presente documento ha valore puramente indicativo. Per i dettagli funzionali si rimanda ai cataloghi tecnici.

## RASCHIATORI

| Denominazione DICHTOMATIK Corrente | Profilo | Denominazione DICHTOMATIK | Materiale | BUSAK (TSS) | POLYPAC (TSS) | MERKEL | SIMRIT | GUARNITEC | ASTON SEAL | PARKER | HALLITE | SEALING PARTS |
|---|---|---|---|---|---|---|---|---|---|---|---|---|
| AE 40 | | A 40 | NBR | WRM | WRM | P6 | P6 | GHM | – | A5 | 31 | – |
| AE 42 | | A 42 | TPU | – | WRM/P | PU6 | AUASOB | GHK | – | – | 831 | PW |
| AE 41 | | A 41 | NBR | – | – | P5 | ASOB | – | – | A1 | – | – |
| AE 47 | | A 47 | TPU | – | – | – | – | GHP | SAG | A1 (PUR) | 834 | PW/F |
| AM 43 | | AM 43 | NBR | WSA | WRM/C | – | AS | – | SMA | AM | 37 | – |
| AM 44 | | AM 44 | TPU | WRM/PC | WRM/PC | AUAS | AUAS | GPA | SAF/GM | – | 860 | PW/G |
| AM 45 | | AM 45 | NBR | – | – | P7 | P7 | – | SMI | – | 32 | – |
| AM 54 | | AM 54 | TPU | SWP | SWP | – | AUPS | GPK | – | AF | – | HDW |
| AD 60 | | AD 60 | PTFE | EXCLUDER 2 (WE3) | WTF (Profilo B) | – | – | GHF | S2A | AD | 335 | – |
| AD 61 | | AD 61 | PTFE | EXCLUDER 5 (WE5) | – | PT1 | PT1 | – | – | – | – | – |
| AD 48 | | AD 48 | TPU | DA22 | UWR/P | – | PU11 | GHW | SAB | AY | 839 | RSW |
| ADM 55 | | ADM 55 | TPU | UWR/PC | – | – | – | – | – | – | – | – |
| AD 51 | | AD 51 | NBR | DA17 | DSR-U | P8 | P8 | – | – | – | – | – |

## ANELLI GUIDA

| Denominazione DICHTOMATIK Corrente | Profilo | Denominazione DICHTOMATIK | Materiale | BUSAK (TSS) | POLYPAC (TSS) | MERKEL | SIMRIT | GUARNITEC | ASTON SEAL | PARKER | HALLITE | SEALING PARTS |
|---|---|---|---|---|---|---|---|---|---|---|---|---|
| FB 01 | | FUB 01 | PTFE | TURCITE SLYDRING OFF-THE-ROLL | GT | KF - SF | FBI - FBA | TEF SEAL TF | MRB | F3 | 87 | – |
| FB 05 | | – | HG RESINA FENOLICA | – | – | – | – | – | – | – | 506 | – |
| FRK 01 | | FUR 02 | PTFE | TURCITE SLYDRING | E/GT | KF | KF | – | GRB | – | – | – |
| FRS 01 | | FUR 01 | PTFE | TURCITE SLYDRING | I/GT | SF | SF | – | GRB | – | – | – |
| FRK 05 | | FUR 06 | HG RESINA FENOLICA | LUITEX C933 SLYDRING | E/GT-102 | KB | KB | AFE | GRF | FR (D5929) | 506 | – |
| FRS 05 | | FUR 05 | HG RESINA FENOLICA | LUITEX C932 SLYDRING | I/GT-102 | SB | SB | AFI | GRF | FR (D5929) | 506 | – |
| FRS 06 | | – | POM | – | – | – | – | – | FSP | – | – | – |
| FRK 03 | | FUR 04 | POM | HIMOD SLYDRING | E/DWR | – | – | AGE | FE | – | – | WRE |
| FRS 03 | | FUR 03 | POM | HIMOD SLYDRING | I/DWR | – | – | AGI | FI | – | – | WRI |

Il presente documento ha valore puramente indicativo. Per i dettagli funzionali si rimanda ai cataloghi tecnici.

# Anello guida pistone

POM

FRK 03

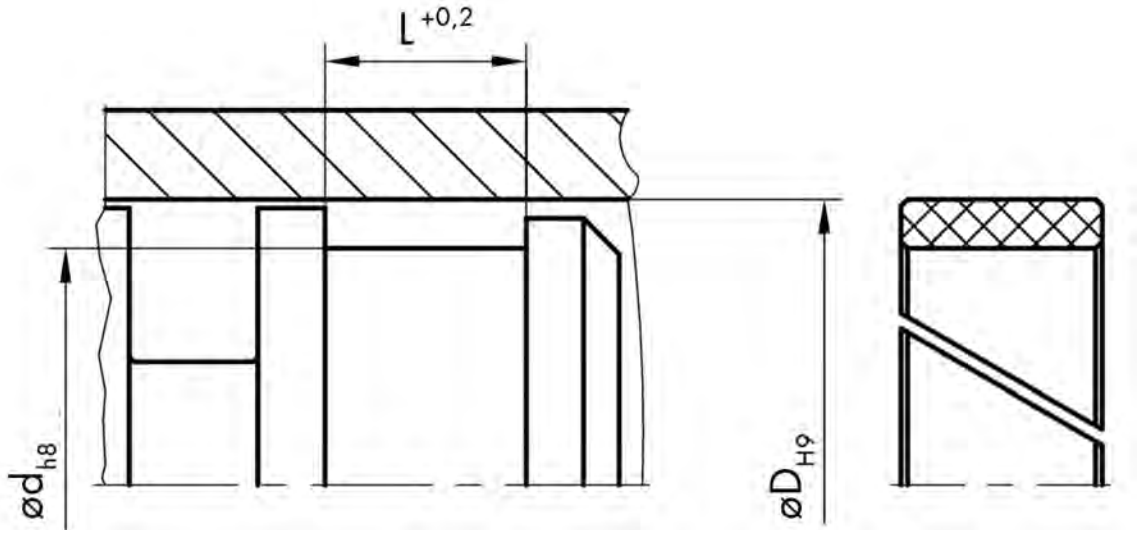
L +0,2
ød h8
øD H9

# ANELLO GUIDA PISTONE - FRK 03

| CODICE | TIPO | MAT. | D mm | d mm | L mm | LISTINO 5-2016 X 100 pz € |
|---|---|---|---|---|---|---|
| == | FRK 03 | POM | 20 | 16 | 9,6 | A RICHIESTA |
| == | FRK 03 | POM | 25 | 21 | 9,6 | A RICHIESTA |
| == | FRK 03 | POM | 30 | 26 | 9,6 | A RICHIESTA |
| == | FRK 03 | POM | 32 | 28 | 9,6 | A RICHIESTA |
| == | FRK 03 | POM | 35 | 31 | 9,6 | A RICHIESTA |
| == | FRK 03 | POM | 40 | 36 | 9,6 | A RICHIESTA |
| == | FRK 03 | POM | 50 | 44 | 9,6 | A RICHIESTA |
| == | FRK 03 | POM | 55 | 49 | 12,8 | A RICHIESTA |
| == | FRK 03 | POM | 60 | 54 | 12,8 | A RICHIESTA |
| == | FRK 03 | POM | 63 | 57 | 12,8 | A RICHIESTA |
| == | FRK 03 | POM | 63 | 58 | 5,6 | A RICHIESTA |
| == | FRK 03 | POM | 70 | 64 | 12,8 | A RICHIESTA |
| == | FRK 03 | POM | 75 | 69 | 12,8 | A RICHIESTA |
| == | FRK 03 | POM | 80 | 74 | 12,8 | A RICHIESTA |
| == | FRK 03 | POM | 85 | 79 | 12,8 | A RICHIESTA |
| == | FRK 03 | POM | 86 | 80 | 24,5 | A RICHIESTA |
| == | FRK 03 | POM | 90 | 84 | 12,8 | A RICHIESTA |
| == | FRK 03 | POM | 95 | 89 | 12,8 | A RICHIESTA |
| == | FRK 03 | POM | 100 | 94 | 12,8 | A RICHIESTA |
| == | FRK 03 | POM | 105 | 99 | 12,8 | A RICHIESTA |
| == | FRK 03 | POM | 110 | 104 | 12,8 | A RICHIESTA |
| == | FRK 03 | POM | 115 | 109 | 12,8 | A RICHIESTA |
| == | FRK 03 | POM | 115 | 109 | 19,2 | A RICHIESTA |
| == | FRK 03 | POM | 120 | 114 | 12,8 | A RICHIESTA |
| == | FRK 03 | POM | 125 | 119 | 12,8 | A RICHIESTA |
| == | FRK 03 | POM | 130 | 124 | 12,8 | A RICHIESTA |
| == | FRK 03 | POM | 135 | 129 | 12,8 | A RICHIESTA |
| == | FRK 03 | POM | 140 | 134 | 12,8 | A RICHIESTA |
| == | FRK 03 | POM | 145 | 139 | 12,8 | A RICHIESTA |
| == | FRK 03 | POM | 150 | 144 | 12,8 | A RICHIESTA |
| == | FRK 03 | POM | 155 | 149 | 19,2 | A RICHIESTA |
| == | FRK 03 | POM | 160 | 154 | 19,2 | A RICHIESTA |
| == | FRK 03 | POM | 165 | 159 | 19,2 | A RICHIESTA |
| == | FRK 03 | POM | 170 | 164 | 19,2 | A RICHIESTA |
| == | FRK 03 | POM | 175 | 169 | 19,2 | A RICHIESTA |
| == | FRK 03 | POM | 180 | 174 | 19,2 | A RICHIESTA |
| == | FRK 03 | POM | 185 | 179 | 19,2 | A RICHIESTA |
| == | FRK 03 | POM | 190 | 184 | 19,2 | A RICHIESTA |
| == | FRK 03 | POM | 195 | 189 | 19,2 | A RICHIESTA |
| == | FRK 03 | POM | 200 | 194 | 19,2 | A RICHIESTA |
| == | FRK 03 | POM | 203 | 197 | 19,2 | A RICHIESTA |
| == | FRK 03 | POM | 205 | 199 | 19,2 | A RICHIESTA |
| == | FRK 03 | POM | 210 | 204 | 19,2 | A RICHIESTA |
| == | FRK 03 | POM | 215 | 209 | 19,2 | A RICHIESTA |
| == | FRK 03 | POM | 220 | 214 | 19,2 | A RICHIESTA |
| == | FRK 03 | POM | 225 | 219 | 19,2 | A RICHIESTA |
| == | FRK 03 | POM | 228 | 222 | 19,2 | A RICHIESTA |
| == | FRK 03 | POM | 230 | 224 | 19,2 | A RICHIESTA |
| == | FRK 03 | POM | 235 | 229 | 19,2 | A RICHIESTA |

# ANELLO GUIDA PISTONE - FRK 03

POM

| CODICE | TIPO | MAT. | D mm | d mm | L mm | LISTINO 5-2016 X 100 pz € |
|---|---|---|---|---|---|---|
| == | FRK 03 | POM | 240 | 234 | 19,2 | A RICHIESTA |
| == | FRK 03 | POM | 245 | 239 | 19,2 | A RICHIESTA |
| == | FRK 03 | POM | 250 | 244 | 19,2 | A RICHIESTA |
| == | FRK 03 | POM | 255 | 249 | 19,2 | A RICHIESTA |
| == | FRK 03 | POM | 260 | 254 | 19,2 | A RICHIESTA |
| == | FRK 03 | POM | 270 | 264 | 19,2 | A RICHIESTA |
| == | FRK 03 | POM | 275 | 269 | 19,2 | A RICHIESTA |
| == | FRK 03 | POM | 280 | 274 | 19,2 | A RICHIESTA |
| == | FRK 03 | POM | 285 | 279 | 19,2 | A RICHIESTA |
| == | FRK 03 | POM | 290 | 284 | 19,2 | A RICHIESTA |
| == | FRK 03 | POM | 295 | 289 | 19,2 | A RICHIESTA |
| == | FRK 03 | POM | 300 | 294 | 19,2 | A RICHIESTA |

# Anello guida pistone

RESINA FENOLICA (HG)

FRK 05

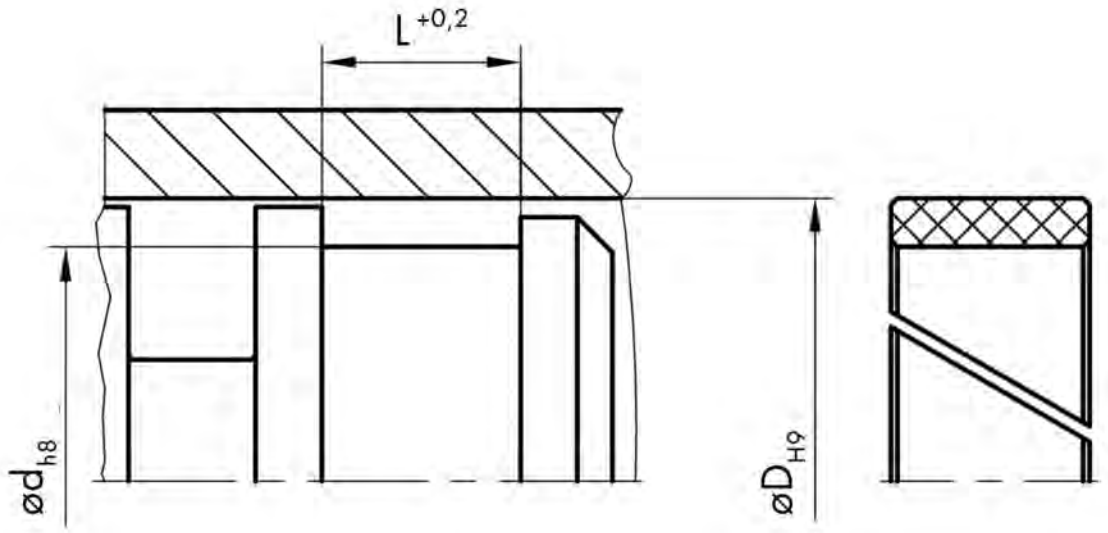
L +0,2
ød h8
øD H9

# ANELLO GUIDA PISTONE - FRK 05

| CODICE | TIPO | MAT. | D mm | d mm | L mm | LISTINO 5-2016 X 100 € |
|---|---|---|---|---|---|---|
| 167998 | FRK 05 | HG | 32 | 27 | 5,6 | 772,62 |
| 168002 | FRK 05 | HG | 35 | 30 | 5,6 | 772,63 |
| 168016 | FRK 05 | HG | 45 | 40 | 5,6 | 772,62 |
| 168017 | FRK 05 | HG | 45 | 40 | 9,7 | 707,54 |
| 168018 | FRK 05 | HG | 45 | 40 | 15 | 783,21 |
| 167563 | FRK 05 | HG | 50 | 45 | 9,7 | 799,10 |
| 168022 | FRK 05 | HG | 50 | 45 | 15 | 1.450,00 |
| 168027 | FRK 05 | HG | 55 | 50 | 5,6 | 783,21 |
| 167562 | FRK 05 | HG | 55 | 50 | 9,7 | 799,10 |
| 168029 | FRK 05 | HG | 55 | 50 | 15 | 1.450,01 |
| 168035 | FRK 05 | HG | 60 | 55 | 9,7 | 799,10 |
| 168036 | FRK 05 | HG | 60 | 55 | 15 | 1.450,01 |
| 168046 | FRK 05 | HG | 65 | 60 | 9,7 | 910,22 |
| 168047 | FRK 05 | HG | 65 | 60 | 15 | 1.450,01 |
| 168053 | FRK 05 | HG | 70 | 65 | 15 | 1.450,01 |
| 168056 | FRK 05 | HG | 75 | 70 | 5,6 | 867,89 |
| 168057 | FRK 05 | HG | 75 | 70 | 9,7 | 910,22 |
| 167564 | FRK 05 | HG | 75 | 70 | 15 | 1.450,01 |
| 167570 | FRK 05 | HG | 80 | 75 | 15 | 1.450,01 |
| 168062 | FRK 05 | HG | 80 | 75 | 20 | 2.361,09 |
| 168063 | FRK 05 | HG | 80 | 75 | 25 | 3.524,45 |
| 168065 | FRK 05 | HG | 85 | 80 | 9,7 | 910,22 |
| 168066 | FRK 05 | HG | 85 | 80 | 15 | 1.450,01 |
| 168067 | FRK 05 | HG | 85 | 80 | 20 | 2.361,09 |
| 168069 | FRK 05 | HG | 90 | 85 | 9,7 | 910,22 |
| 168070 | FRK 05 | HG | 90 | 85 | 15 | 1.450,01 |
| 168071 | FRK 05 | HG | 90 | 85 | 20 | 2.361,09 |
| 168072 | FRK 05 | HG | 90 | 85 | 25 | 3.524,46 |
| 168074 | FRK 05 | HG | 95 | 90 | 9,7 | 1.483,70 |
| 168075 | FRK 05 | HG | 95 | 90 | 15 | 1.756,94 |
| 168076 | FRK 05 | HG | 100 | 95 | 5,6 | 1.528,69 |
| 165996 | FRK 05 | HG | 100 | 95 | 9,7 | 1.528,69 |
| 165997 | FRK 05 | HG | 100 | 95 | 15 | 1.756,94 |
| 168077 | FRK 05 | HG | 100 | 95 | 20 | 2.361,09 |
| 168078 | FRK 05 | HG | 100 | 95 | 25 | 3.524,46 |
| 168080 | FRK 05 | HG | 105 | 100 | 9,7 | 1.555,84 |
| 167567 | FRK 05 | HG | 105 | 100 | 15 | 1.781,78 |
| 168082 | FRK 05 | HG | 110 | 105 | 20 | 2.361,09 |
| 168087 | FRK 05 | HG | 115 | 110 | 20 | 2.361,09 |
| 165998 | FRK 05 | HG | 120 | 115 | 9,7 | 1.555,84 |
| 165999 | FRK 05 | HG | 120 | 115 | 15 | 1.781,78 |
| 168089 | FRK 05 | HG | 120 | 115 | 20 | 2.361,09 |
| 168090 | FRK 05 | HG | 120 | 115 | 25 | 3.524,46 |
| 167565 | FRK 05 | HG | 125 | 120 | 15 | 2.254,38 |
| 168095 | FRK 05 | HG | 125 | 120 | 25 | 3.524,46 |
| 166002 | FRK 05 | HG | 130 | 125 | 9,7 | 2.079,87 |
| 168098 | FRK 05 | HG | 130 | 125 | 15 | 2.304,85 |
| 168100 | FRK 05 | HG | 130 | 125 | 25 | 3.712,83 |
| 168101 | FRK 05 | HG | 135 | 130 | 15 | 2.466,06 |

# ANELLO GUIDA PISTONE - FRK 05

RESINA FENOLICA (HG)

| CODICE | TIPO | MAT. | D mm | d mm | L mm | LISTINO 5-2016 X 100 € |
|---|---|---|---|---|---|---|
| 168102 | FRK 05 | HG | 135 | 130 | 25 | 4.805,11 |
| 166000 | FRK 05 | HG | 140 | 135 | 9,7 | 2.079,87 |
| 166001 | FRK 05 | HG | 140 | 135 | 15 | 2.304,85 |
| 174862 | FRK 05 | HG | 150 | 140 | 25 | 5.704,66 |
| 168108 | FRK 05 | HG | 150 | 145 | 9,7 | 2.811,04 |
| 166004 | FRK 05 | HG | 160 | 155 | 15 | 2.304,85 |
| 168114 | FRK 05 | HG | 160 | 155 | 25 | 3.869,53 |
| 168117 | FRK 05 | HG | 165 | 160 | 9,7 | 2.800,91 |
| 168118 | FRK 05 | HG | 165 | 160 | 15 | 4.477,01 |
| 168119 | FRK 05 | HG | 165 | 160 | 25 | 5.101,26 |
| 168120 | FRK 05 | HG | 165 | 160 | 30 | 6.296,99 |
| 168122 | FRK 05 | HG | 170 | 165 | 25 | 5.101,26 |
| 168124 | FRK 05 | HG | 175 | 170 | 15 | 4.477,01 |
| 168125 | FRK 05 | HG | 175 | 170 | 25 | 5.101,26 |
| 175485 | FRK 05 | HG | 180 | 172 | 20 | 4.460,04 |
| 168131 | FRK 05 | HG | 185 | 180 | 25 | 5.403,85 |
| 168142 | FRK 05 | HG | 200 | 195 | 30 | 7.387,60 |
| 168149 | FRK 05 | HG | 220 | 215 | 25 | 6.386,26 |
| 168152 | FRK 05 | HG | 225 | 220 | 25 | 6.386,26 |
| 168153 | FRK 05 | HG | 225 | 220 | 30 | 8.647,09 |
| 168155 | FRK 05 | HG | 230 | 225 | 25 | 6.386,26 |
| 168156 | FRK 05 | HG | 230 | 225 | 30 | 8.647,09 |
| 168158 | FRK 05 | HG | 235 | 230 | 25 | 6.386,26 |
| 168159 | FRK 05 | HG | 235 | 230 | 30 | 8.647,09 |
| 168160 | FRK 05 | HG | 240 | 235 | 15 | 5.724,43 |
| 168163 | FRK 05 | HG | 240 | 235 | 30 | 8.647,09 |
| 168166 | FRK 05 | HG | 245 | 240 | 15 | 5.724,43 |
| 168169 | FRK 05 | HG | 245 | 240 | 30 | 8.647,09 |
| 168176 | FRK 05 | HG | 260 | 255 | 30 | 8.647,09 |
| 168177 | FRK 05 | HG | 270 | 265 | 15 | 5.905,84 |
| 168178 | FRK 05 | HG | 270 | 265 | 20 | 5.991,03 |
| 168179 | FRK 05 | HG | 270 | 265 | 25 | 7.758,03 |
| 168180 | FRK 05 | HG | 270 | 265 | 30 | 8.647,09 |
| 168187 | FRK 05 | HG | 285 | 280 | 30 | 10.837,96 |
| 168190 | FRK 05 | HG | 290 | 285 | 25 | 8.170,81 |
| 168194 | FRK 05 | HG | 300 | 295 | 25 | 8.752,57 |
| 168195 | FRK 05 | HG | 300 | 295 | 30 | 10.837,96 |
| | | | | | | |
| | | | ALTRE MISURE DISPONIBILI A MAGAZZINO | | | |
| | | | | | | |
| 167967 | FRK 05 | HG | 20 | 15 | 5,6 | A RICHIESTA |
| 167969 | FRK 05 | HG | 20 | 15 | 9,7 | A RICHIESTA |
| 167990 | FRK 05 | HG | 25 | 20 | 5,6 | A RICHIESTA |
| 167999 | FRK 05 | HG | 32 | 27 | 9,7 | A RICHIESTA |
| 168000 | FRK 05 | HG | 32 | 28 | 5,6 | A RICHIESTA |
| 168008 | FRK 05 | HG | 40 | 35 | 5,6 | A RICHIESTA |
| 168009 | FRK 05 | HG | 40 | 35 | 9,7 | A RICHIESTA |
| 168010 | FRK 05 | HG | 40 | 35 | 12 | A RICHIESTA |
| 168011 | FRK 05 | HG | 40 | 35 | 15 | A RICHIESTA |

# ANELLO GUIDA PISTONE - FRK 05

| CODICE | TIPO | MAT. | D mm | d mm | L mm | LISTINO 5-2016 X 100 € |
|---|---|---|---|---|---|---|
| 167577 | FRK 05 | HG | 50 | 45 | 5,6 | A RICHIESTA |
| 168021 | FRK 05 | HG | 50 | 45 | 12 | A RICHIESTA |
| 168023 | FRK 05 | HG | 50 | 45 | 25 | A RICHIESTA |
| 168034 | FRK 05 | HG | 60 | 55 | 5,6 | A RICHIESTA |
| 168037 | FRK 05 | HG | 60 | 56 | 8 | A RICHIESTA |
| 168040 | FRK 05 | HG | 63 | 58 | 5,6 | A RICHIESTA |
| 168041 | FRK 05 | HG | 63 | 58 | 9,7 | A RICHIESTA |
| 168042 | FRK 05 | HG | 63 | 58 | 15 | A RICHIESTA |
| 168043 | FRK 05 | HG | 63 | 58 | 20 | A RICHIESTA |
| 168044 | FRK 05 | HG | 63 | 58 | 25 | A RICHIESTA |
| 166941 | FRK 05 | HG | 65 | 60 | 5,6 | A RICHIESTA |
| 168052 | FRK 05 | HG | 70 | 65 | 5,6 | A RICHIESTA |
| 165995 | FRK 05 | HG | 70 | 65 | 9,7 | A RICHIESTA |
| 168060 | FRK 05 | HG | 80 | 75 | 5,6 | A RICHIESTA |
| 168061 | FRK 05 | HG | 80 | 75 | 9,7 | A RICHIESTA |
| 167022 | FRK 05 | HG | 110 | 105 | 9,7 | A RICHIESTA |
| 167566 | FRK 05 | HG | 110 | 105 | 15 | A RICHIESTA |
| 168094 | FRK 05 | HG | 125 | 120 | 20 | A RICHIESTA |
| 168097 | FRK 05 | HG | 130 | 125 | 5,6 | A RICHIESTA |
| 168099 | FRK 05 | HG | 130 | 125 | 20 | A RICHIESTA |
| 168104 | FRK 05 | HG | 140 | 135 | 20 | A RICHIESTA |
| 168105 | FRK 05 | HG | 140 | 135 | 25 | A RICHIESTA |
| 168106 | FRK 05 | HG | 140 | 135 | 30 | A RICHIESTA |
| 168109 | FRK 05 | HG | 150 | 145 | 15 | A RICHIESTA |
| 168110 | FRK 05 | HG | 150 | 145 | 20 | A RICHIESTA |
| 168111 | FRK 05 | HG | 150 | 145 | 25 | A RICHIESTA |
| 166003 | FRK 05 | HG | 160 | 155 | 9,7 | A RICHIESTA |
| 168113 | FRK 05 | HG | 160 | 155 | 20 | A RICHIESTA |
| 168121 | FRK 05 | HG | 170 | 165 | 15 | A RICHIESTA |
| 168123 | FRK 05 | HG | 170 | 165 | 30 | A RICHIESTA |
| 168126 | FRK 05 | HG | 175 | 170 | 30 | A RICHIESTA |
| 168127 | FRK 05 | HG | 180 | 175 | 9,7 | A RICHIESTA |
| 167568 | FRK 05 | HG | 180 | 175 | 15 | A RICHIESTA |
| 168128 | FRK 05 | HG | 180 | 175 | 25 | A RICHIESTA |
| 168129 | FRK 05 | HG | 180 | 175 | 30 | A RICHIESTA |
| 168135 | FRK 05 | HG | 195 | 190 | 9,7 | A RICHIESTA |
| 168137 | FRK 05 | HG | 200 | 195 | 5,6 | A RICHIESTA |
| 168138 | FRK 05 | HG | 200 | 195 | 9,7 | A RICHIESTA |
| 168139 | FRK 05 | HG | 200 | 195 | 15 | A RICHIESTA |
| 168140 | FRK 05 | HG | 200 | 195 | 20 | A RICHIESTA |
| 168141 | FRK 05 | HG | 200 | 195 | 25 | A RICHIESTA |
| 168147 | FRK 05 | HG | 220 | 215 | 15 | A RICHIESTA |
| 168148 | FRK 05 | HG | 220 | 215 | 20 | A RICHIESTA |
| 168150 | FRK 05 | HG | 220 | 215 | 30 | A RICHIESTA |
| 168154 | FRK 05 | HG | 230 | 225 | 15 | A RICHIESTA |
| 168161 | FRK 05 | HG | 240 | 235 | 20 | A RICHIESTA |
| 168165 | FRK 05 | HG | 245 | 240 | 9,7 | A RICHIESTA |
| 168167 | FRK 05 | HG | 245 | 240 | 20 | A RICHIESTA |
| 168168 | FRK 05 | HG | 245 | 240 | 25 | A RICHIESTA |

# ANELLO GUIDA PISTONE - FRK 05

RESINA FENOLICA (HG)

| CODICE | TIPO | MAT. | D mm | d mm | L mm | LISTINO 5-2016 X 100 € |
|---|---|---|---|---|---|---|
| 168170 | FRK 05 | HG | 250 | 245 | 15 | A RICHIESTA |
| 168172 | FRK 05 | HG | 250 | 245 | 25 | A RICHIESTA |
| 168173 | FRK 05 | HG | 250 | 245 | 30 | A RICHIESTA |
| 168174 | FRK 05 | HG | 260 | 255 | 15 | A RICHIESTA |
| 168175 | FRK 05 | HG | 260 | 255 | 25 | A RICHIESTA |
| 168181 | FRK 05 | HG | 275 | 270 | 30 | A RICHIESTA |
| 168182 | FRK 05 | HG | 280 | 275 | 9,7 | A RICHIESTA |
| 168183 | FRK 05 | HG | 280 | 275 | 15 | A RICHIESTA |
| 168186 | FRK 05 | HG | 280 | 275 | 30 | A RICHIESTA |
| 168188 | FRK 05 | HG | 290 | 285 | 9,7 | A RICHIESTA |
| 168189 | FRK 05 | HG | 290 | 285 | 15 | A RICHIESTA |
| 168191 | FRK 05 | HG | 300 | 295 | 9,7 | A RICHIESTA |
| 168193 | FRK 05 | HG | 300 | 295 | 20 | A RICHIESTA |
| 168197 | FRK 05 | HG | 305 | 300 | 25 | A RICHIESTA |
| 168198 | FRK 05 | HG | 310 | 305 | 9,7 | A RICHIESTA |
| 168200 | FRK 05 | HG | 320 | 315 | 9,7 | A RICHIESTA |
| 168204 | FRK 05 | HG | 320 | 315 | 15 | A RICHIESTA |
| 168205 | FRK 05 | HG | 320 | 315 | 25 | A RICHIESTA |
| 168206 | FRK 05 | HG | 320 | 315 | 30 | A RICHIESTA |
| 168208 | FRK 05 | HG | 325 | 320 | 9,7 | A RICHIESTA |
| 168209 | FRK 05 | HG | 330 | 325 | 9,7 | A RICHIESTA |
| 168210 | FRK 05 | HG | 330 | 325 | 25 | A RICHIESTA |
| 168212 | FRK 05 | HG | 335 | 330 | 9,7 | A RICHIESTA |
| 168215 | FRK 05 | HG | 345 | 340 | 30 | A RICHIESTA |
| 168216 | FRK 05 | HG | 350 | 345 | 9,7 | A RICHIESTA |

# Anello guida stelo

POM

FRS 03

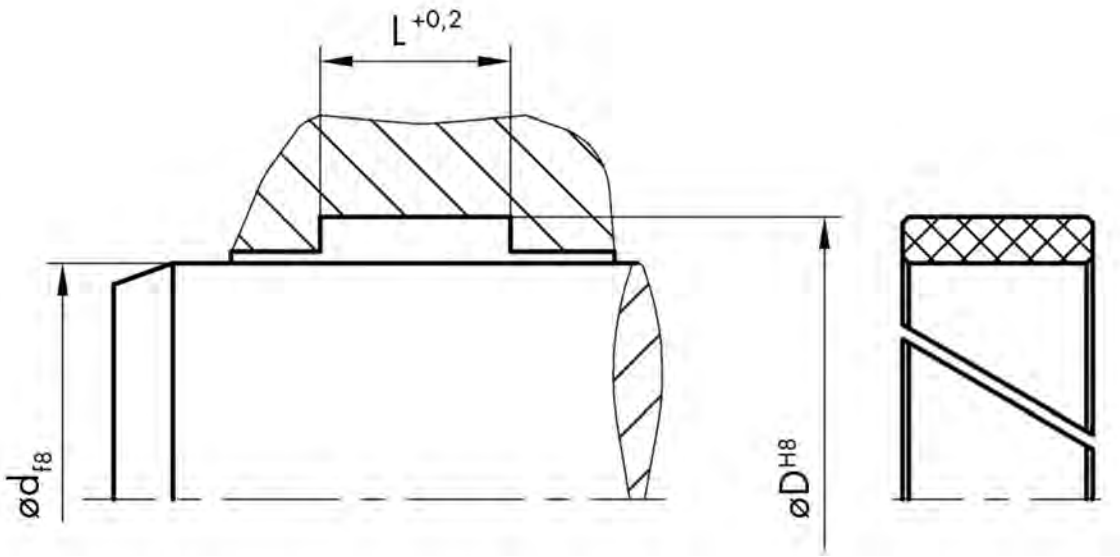
L +0,2
ød f8
øD H8

# ANELLO GUIDA STELO - FRS 03

| CODICE | TIPO | MAT. | d mm | D mm | L mm | LISTINO 5-2016 X 100 PCS € |
|---|---|---|---|---|---|---|
| == | FRS 03 | POM | 12 | 16 | 9,7 | A RICHIESTA |
| == | FRS 03 | POM | 14 | 18 | 9,7 | A RICHIESTA |
| == | FRS 03 | POM | 16 | 20 | 5,6 | A RICHIESTA |
| == | FRS 03 | POM | 16 | 20 | 9,7 | A RICHIESTA |
| == | FRS 03 | POM | 18 | 22 | 9,7 | A RICHIESTA |
| == | FRS 03 | POM | 20 | 24 | 9,7 | A RICHIESTA |
| == | FRS 03 | POM | 22 | 26 | 9,7 | A RICHIESTA |
| == | FRS 03 | POM | 25 | 29 | 9,7 | A RICHIESTA |
| == | FRS 03 | POM | 28 | 32 | 9,7 | A RICHIESTA |
| == | FRS 03 | POM | 32 | 36 | 9,7 | A RICHIESTA |
| == | FRS 03 | POM | 35 | 39 | 9,7 | A RICHIESTA |
| == | FRS 03 | POM | 36 | 40 | 9,7 | A RICHIESTA |
| == | FRS 03 | POM | 36 | 41 | 5,6 | A RICHIESTA |
| == | FRS 03 | POM | 36 | 41 | 9,7 | A RICHIESTA |
| == | FRS 03 | POM | 38 | 42 | 9,7 | A RICHIESTA |
| == | FRS 03 | POM | 44 | 48 | 25,4 | A RICHIESTA |
| == | FRS 03 | POM | 45 | 51 | 9,7 | A RICHIESTA |
| == | FRS 03 | POM | 46 | 50 | 9,7 | A RICHIESTA |
| == | FRS 03 | POM | 46 | 52 | 9,7 | A RICHIESTA |
| == | FRS 03 | POM | 48 | 54 | 9,7 | A RICHIESTA |
| == | FRS 03 | POM | 50 | 56 | 9,7 | A RICHIESTA |
| == | FRS 03 | POM | 53 | 59 | 9,7 | A RICHIESTA |
| == | FRS 03 | POM | 55 | 61 | 9,7 | A RICHIESTA |
| == | FRS 03 | POM | 56 | 62 | 12,8 | A RICHIESTA |
| == | FRS 03 | POM | 58 | 63 | 9,7 | A RICHIESTA |
| == | FRS 03 | POM | 60 | 66 | 9,7 | A RICHIESTA |
| == | FRS 03 | POM | 60 | 66 | 12,8 | A RICHIESTA |
| == | FRS 03 | POM | 63 | 69 | 12,8 | A RICHIESTA |
| == | FRS 03 | POM | 65 | 70 | 9,7 | A RICHIESTA |
| == | FRS 03 | POM | 65 | 71 | 12,8 | A RICHIESTA |
| == | FRS 03 | POM | 70 | 75 | 5,6 | A RICHIESTA |
| == | FRS 03 | POM | 70 | 75 | 9,7 | A RICHIESTA |
| == | FRS 03 | POM | 70 | 76 | 12,8 | A RICHIESTA |
| == | FRS 03 | POM | 70 | 76 | 19,2 | A RICHIESTA |
| == | FRS 03 | POM | 71 | 75 | 15,0 | A RICHIESTA |
| == | FRS 03 | POM | 75 | 80 | 9,7 | A RICHIESTA |
| == | FRS 03 | POM | 75 | 81 | 12,8 | A RICHIESTA |
| == | FRS 03 | POM | 75 | 81 | 19,2 | A RICHIESTA |
| == | FRS 03 | POM | 80 | 86 | 12,8 | A RICHIESTA |
| == | FRS 03 | POM | 85 | 90 | 9,7 | A RICHIESTA |
| == | FRS 03 | POM | 85 | 91 | 12,8 | A RICHIESTA |
| == | FRS 03 | POM | 85 | 91 | 12,8 | A RICHIESTA |
| == | FRS 03 | POM | 90 | 96 | 12,8 | A RICHIESTA |
| == | FRS 03 | POM | 95 | 100 | 5,6 | A RICHIESTA |
| == | FRS 03 | POM | 95 | 100 | 9,7 | A RICHIESTA |
| == | FRS 03 | POM | 95 | 101 | 12,8 | A RICHIESTA |
| == | FRS 03 | POM | 100 | 105 | 5,6 | A RICHIESTA |
| == | FRS 03 | POM | 100 | 106 | 12,8 | A RICHIESTA |
| == | FRS 03 | POM | 105 | 111 | 12,8 | A RICHIESTA |

# ANELLO GUIDA STELO - FRS 03

POM

| CODICE | TIPO | MAT. | d mm | D mm | L mm | LISTINO 5-2016 X 100 PCS € |
|---|---|---|---|---|---|---|
| == | FRS 03 | POM | 110 | 116 | 12,8 | A RICHIESTA |
| == | FRS 03 | POM | 115 | 121 | 12,8 | A RICHIESTA |
| == | FRS 03 | POM | 120 | 126 | 12,8 | A RICHIESTA |
| == | FRS 03 | POM | 125 | 131 | 12,8 | A RICHIESTA |
| == | FRS 03 | POM | 130 | 136 | 12,8 | A RICHIESTA |
| == | FRS 03 | POM | 135 | 141 | 12,8 | A RICHIESTA |
| == | FRS 03 | POM | 140 | 146 | 12,8 | A RICHIESTA |
| == | FRS 03 | POM | 145 | 151 | 12,8 | A RICHIESTA |
| == | FRS 03 | POM | 150 | 156 | 12,8 | A RICHIESTA |
| == | FRS 03 | POM | 155 | 161 | 19,2 | A RICHIESTA |
| == | FRS 03 | POM | 160 | 166 | 19,2 | A RICHIESTA |
| == | FRS 03 | POM | 165 | 171 | 19,2 | A RICHIESTA |
| == | FRS 03 | POM | 170 | 176 | 19,2 | A RICHIESTA |
| == | FRS 03 | POM | 175 | 181 | 19,2 | A RICHIESTA |
| == | FRS 03 | POM | 180 | 185 | 15,0 | A RICHIESTA |
| == | FRS 03 | POM | 180 | 186 | 19,2 | A RICHIESTA |
| == | FRS 03 | POM | 186 | 192 | 19,2 | A RICHIESTA |
| == | FRS 03 | POM | 190 | 196 | 19,2 | A RICHIESTA |
| == | FRS 03 | POM | 195 | 201 | 19,2 | A RICHIESTA |
| == | FRS 03 | POM | 200 | 206 | 19,2 | A RICHIESTA |
| == | FRS 03 | POM | 205 | 211 | 19,2 | A RICHIESTA |
| == | FRS 03 | POM | 210 | 216 | 19,2 | A RICHIESTA |
| == | FRS 03 | POM | 215 | 221 | 19,2 | A RICHIESTA |
| == | FRS 03 | POM | 220 | 226 | 19,2 | A RICHIESTA |
| == | FRS 03 | POM | 225 | 231 | 19,2 | A RICHIESTA |
| == | FRS 03 | POM | 230 | 236 | 19,2 | A RICHIESTA |
| == | FRS 03 | POM | 235 | 241 | 19,2 | A RICHIESTA |
| == | FRS 03 | POM | 240 | 246 | 19,2 | A RICHIESTA |
| == | FRS 03 | POM | 245 | 251 | 19,2 | A RICHIESTA |
| == | FRS 03 | POM | 250 | 256 | 19,2 | A RICHIESTA |
| == | FRS 03 | POM | 260 | 266 | 19,2 | A RICHIESTA |
| == | FRS 03 | POM | 265 | 271 | 19,2 | A RICHIESTA |
| == | FRS 03 | POM | 270 | 276 | 19,2 | A RICHIESTA |
| == | FRS 03 | POM | 275 | 281 | 19,2 | A RICHIESTA |
| == | FRS 03 | POM | 280 | 286 | 19,2 | A RICHIESTA |
| == | FRS 03 | POM | 285 | 291 | 19,2 | A RICHIESTA |
| == | FRS 03 | POM | 290 | 296 | 19,2 | A RICHIESTA |
| == | FRS 03 | POM | 295 | 301 | 19,2 | A RICHIESTA |
| == | FRS 03 | POM | 300 | 306 | 19,2 | A RICHIESTA |

# Anello guida stelo

RESINA FENOLICA (HG)

FRS 05

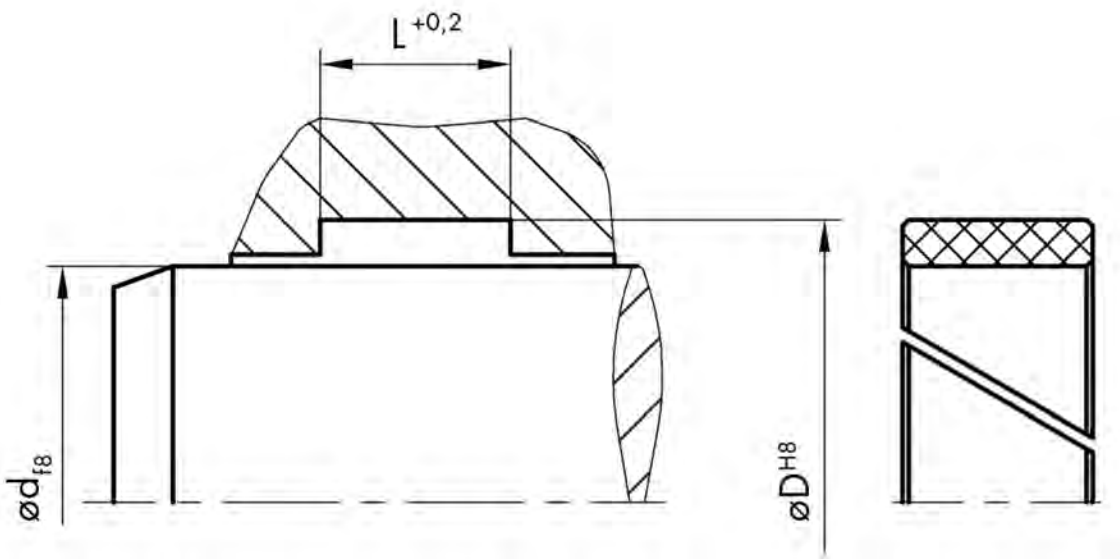
L +0,2
ød f8
øD H8

# ANELLO GUIDA STELO - FRS 05

| CODICE | TIPO | MAT. | d mm | D mm | L mm | LISTINO 5-2016 X 100 PCS € |
|---|---|---|---|---|---|---|
| 167634 | FRS 05 | HG | 27 | 32 | 5,6 | 772,62 |
| 167640 | FRS 05 | HG | 30 | 35 | 5,6 | 742,91 |
| 167572 | FRS 05 | HG | 40 | 45 | 5,6 | 742,91 |
| 167673 | FRS 05 | HG | 40 | 45 | 9,7 | 680,33 |
| 167573 | FRS 05 | HG | 40 | 45 | 15 | 753,09 |
| 166695 | FRS 05 | HG | 45 | 50 | 9,7 | 768,37 |
| 167681 | FRS 05 | HG | 45 | 50 | 15 | 1.394,24 |
| 167684 | FRS 05 | HG | 50 | 55 | 5,6 | 753,09 |
| 165983 | FRS 05 | HG | 50 | 55 | 9,7 | 768,37 |
| 167685 | FRS 05 | HG | 50 | 55 | 15 | 1.394,24 |
| 165984 | FRS 05 | HG | 55 | 60 | 9,7 | 768,37 |
| 167694 | FRS 05 | HG | 55 | 60 | 15 | 1.394,24 |
| 166940 | FRS 05 | HG | 60 | 65 | 9,7 | 875,21 |
| 165986 | FRS 05 | HG | 60 | 65 | 15 | 1.394,24 |
| 167717 | FRS 05 | HG | 65 | 70 | 15 | 1.394,24 |
| 167722 | FRS 05 | HG | 70 | 75 | 5,6 | 834,51 |
| 165987 | FRS 05 | HG | 70 | 75 | 9,7 | 875,21 |
| 165988 | FRS 05 | HG | 70 | 75 | 15 | 1.394,24 |
| 165989 | FRS 05 | HG | 75 | 80 | 15 | 1.394,24 |
| 167730 | FRS 05 | HG | 75 | 80 | 20 | 2.270,28 |
| 167731 | FRS 05 | HG | 75 | 80 | 25 | 3.388,90 |
| 165990 | FRS 05 | HG | 80 | 85 | 9,7 | 875,21 |
| 165991 | FRS 05 | HG | 80 | 85 | 15 | 1.394,24 |
| 167739 | FRS 05 | HG | 85 | 90 | 9,7 | 875,21 |
| 167740 | FRS 05 | HG | 85 | 90 | 15 | 1.394,24 |
| 167741 | FRS 05 | HG | 85 | 90 | 20 | 2.270,28 |
| 167742 | FRS 05 | HG | 85 | 90 | 25 | 3.388,90 |
| 165992 | FRS 05 | HG | 90 | 95 | 9,7 | 1.426,63 |
| 165993 | FRS 05 | HG | 90 | 95 | 15 | 1.689,36 |
| 167752 | FRS 05 | HG | 100 | 105 | 9,7 | 1.496,00 |
| 167753 | FRS 05 | HG | 100 | 105 | 15 | 1.713,25 |
| 167760 | FRS 05 | HG | 105 | 110 | 20 | 2.270,28 |
| 167761 | FRS 05 | HG | 105 | 110 | 25 | 3.388,90 |
| 165994 | FRS 05 | HG | 110 | 115 | 15 | 1.713,25 |
| 167765 | FRS 05 | HG | 110 | 115 | 20 | 2.270,28 |
| 167774 | FRS 05 | HG | 120 | 125 | 9,7 | 1.999,88 |
| 167775 | FRS 05 | HG | 120 | 125 | 15 | 2.167,68 |
| 167776 | FRS 05 | HG | 120 | 125 | 25 | 3.388,90 |
| 167781 | FRS 05 | HG | 125 | 130 | 9,7 | 1.999,88 |
| 167782 | FRS 05 | HG | 125 | 130 | 15 | 2.216,20 |
| 167783 | FRS 05 | HG | 125 | 130 | 25 | 2.470,37 |
| 167787 | FRS 05 | HG | 130 | 135 | 15 | 2.371,21 |
| 167789 | FRS 05 | HG | 130 | 135 | 25 | 4.620,30 |
| 167791 | FRS 05 | HG | 135 | 140 | 9,7 | 1.999,88 |
| 167792 | FRS 05 | HG | 135 | 140 | 15 | 2.216,20 |
| 167801 | FRS 05 | HG | 145 | 150 | 9,7 | 2.702,92 |
| 167808 | FRS 05 | HG | 155 | 160 | 15 | 2.216,20 |
| 167809 | FRS 05 | HG | 155 | 160 | 25 | 3.720,70 |
| 167812 | FRS 05 | HG | 160 | 165 | 15 | 4.304,82 |

# ANELLO GUIDA STELO - FRS 05

RESINA FENOLICA (HG)

| CODICE | TIPO | MAT. | d mm | D mm | L mm | LISTINO 5-2016 X 100 PCS € |
|---|---|---|---|---|---|---|
| 167814 | FRS 05 | HG | 160 | 165 | 25 | 4.905,06 |
| 167815 | FRS 05 | HG | 160 | 165 | 30 | 6.054,80 |
| 167818 | FRS 05 | HG | 165 | 170 | 25 | 4.905,06 |
| 167820 | FRS 05 | HG | 170 | 175 | 15 | 4.304,82 |
| 167822 | FRS 05 | HG | 170 | 175 | 25 | 4.905,06 |
| 167832 | FRS 05 | HG | 180 | 185 | 25 | 5.196,01 |
| 167842 | FRS 05 | HG | 195 | 200 | 30 | 7.103,46 |
| 167852 | FRS 05 | HG | 215 | 220 | 25 | 6.140,63 |
| 167855 | FRS 05 | HG | 220 | 225 | 25 | 6.140,63 |
| 167856 | FRS 05 | HG | 220 | 225 | 30 | 8.314,51 |
| 167858 | FRS 05 | HG | 225 | 230 | 25 | 6.140,63 |
| 167859 | FRS 05 | HG | 225 | 230 | 30 | 8.314,51 |
| 167864 | FRS 05 | HG | 230 | 235 | 25 | 6.140,63 |
| 167865 | FRS 05 | HG | 230 | 235 | 30 | 8.314,51 |
| 167867 | FRS 05 | HG | 235 | 240 | 15 | 5.504,26 |
| 167869 | FRS 05 | HG | 235 | 240 | 30 | 8.314,51 |
| 167870 | FRS 05 | HG | 240 | 245 | 15 | 5.504,26 |
| 167872 | FRS 05 | HG | 240 | 245 | 30 | 8.314,51 |
| 167879 | FRS 05 | HG | 255 | 260 | 30 | 8.314,51 |
| 167886 | FRS 05 | HG | 265 | 270 | 15 | 5.678,69 |
| 167887 | FRS 05 | HG | 265 | 270 | 20 | 5.760,60 |
| 167888 | FRS 05 | HG | 265 | 270 | 25 | 7.459,64 |
| 167889 | FRS 05 | HG | 265 | 270 | 30 | 8.314,51 |
| 167893 | FRS 05 | HG | 275 | 280 | 25 | 7.856,55 |
| 167900 | FRS 05 | HG | 280 | 285 | 30 | 5.388,53 |
| 167904 | FRS 05 | HG | 285 | 290 | 25 | 7.856,55 |
| 167910 | FRS 05 | HG | 295 | 300 | 25 | 8.415,93 |
| 167911 | FRS 05 | HG | 295 | 300 | 30 | 10.421,12 |
| ALTRE MISURE DISPONIBILI A MAGAZZINO | | | | | | |
| 167617 | FRS 05 | HG | 18 | 23 | 9,7 | A RICHIESTA |
| 167623 | FRS 05 | HG | 20 | 25 | 9,7 | A RICHIESTA |
| 167627 | FRS 05 | HG | 22 | 27 | 5,6 | A RICHIESTA |
| 167628 | FRS 05 | HG | 22 | 27 | 9,7 | A RICHIESTA |
| 167630 | FRS 05 | HG | 25 | 30 | 5,6 | A RICHIESTA |
| 167631 | FRS 05 | HG | 25 | 30 | 9,7 | A RICHIESTA |
| 167632 | FRS 05 | HG | 25 | 30 | 15 | A RICHIESTA |
| 167637 | FRS 05 | HG | 28 | 33 | 5,6 | A RICHIESTA |
| 167638 | FRS 05 | HG | 28 | 33 | 9,7 | A RICHIESTA |
| 167650 | FRS 05 | HG | 30 | 35 | 9,7 | A RICHIESTA |
| 167651 | FRS 05 | HG | 30 | 35 | 15 | A RICHIESTA |
| 167653 | FRS 05 | HG | 32 | 37 | 5,6 | A RICHIESTA |
| 167654 | FRS 05 | HG | 32 | 37 | 9,7 | A RICHIESTA |
| 167655 | FRS 05 | HG | 32 | 37 | 15 | A RICHIESTA |
| 167662 | FRS 05 | HG | 36 | 39 | 5,6 | A RICHIESTA |
| 167663 | FRS 05 | HG | 36 | 39 | 15 | A RICHIESTA |
| 167665 | FRS 05 | HG | 36 | 41 | 5,6 | A RICHIESTA |
| 167666 | FRS 05 | HG | 36 | 41 | 9,7 | A RICHIESTA |

# ANELLO GUIDA STELO - FRS 05

| CODICE | TIPO | MAT. | d mm | D mm | L mm | LISTINO 5-2016 X 100 PCS € |
|---|---|---|---|---|---|---|
| 167667 | FRS 05 | HG | 36 | 41 | 15 | A RICHIESTA |
| 167668 | FRS 05 | HG | 36 | 41 | 20 | A RICHIESTA |
| 167669 | FRS 05 | HG | 36 | 41 | 25 | A RICHIESTA |
| 167674 | FRS 05 | HG | 40 | 45 | 20 | A RICHIESTA |
| 167682 | FRS 05 | HG | 45 | 50 | 20 | A RICHIESTA |
| 167686 | FRS 05 | HG | 50 | 55 | 20 | A RICHIESTA |
| 167687 | FRS 05 | HG | 50 | 55 | 25 | A RICHIESTA |
| 167689 | FRS 05 | HG | 52 | 57 | 9,7 | A RICHIESTA |
| 167696 | FRS 05 | HG | 55 | 60 | 25 | A RICHIESTA |
| 167698 | FRS 05 | HG | 56 | 61 | 5,6 | A RICHIESTA |
| 167699 | FRS 05 | HG | 56 | 61 | 9,7 | A RICHIESTA |
| 167700 | FRS 05 | HG | 56 | 61 | 15 | A RICHIESTA |
| 167701 | FRS 05 | HG | 56 | 61 | 20 | A RICHIESTA |
| 167702 | FRS 05 | HG | 56 | 61 | 25 | A RICHIESTA |
| 167706 | FRS 05 | HG | 60 | 65 | 20 | A RICHIESTA |
| 167707 | FRS 05 | HG | 60 | 65 | 25 | A RICHIESTA |
| 167712 | FRS 05 | HG | 63 | 68 | 9,7 | A RICHIESTA |
| 167713 | FRS 05 | HG | 63 | 68 | 15 | A RICHIESTA |
| 167714 | FRS 05 | HG | 63 | 68 | 20 | A RICHIESTA |
| 167723 | FRS 05 | HG | 70 | 75 | 20 | A RICHIESTA |
| 167724 | FRS 05 | HG | 70 | 75 | 25 | A RICHIESTA |
| 167733 | FRS 05 | HG | 75 | 83 | 9,7 | A RICHIESTA |
| 167734 | FRS 05 | HG | 80 | 85 | 5,6 | A RICHIESTA |
| 167736 | FRS 05 | HG | 80 | 85 | 25 | A RICHIESTA |
| 167737 | FRS 05 | HG | 80 | 85 | 30 | A RICHIESTA |
| 167738 | FRS 05 | HG | 85 | 90 | 5,6 | A RICHIESTA |
| 167743 | FRS 05 | HG | 90 | 95 | 5,6 | A RICHIESTA |
| 167745 | FRS 05 | HG | 90 | 95 | 20 | A RICHIESTA |
| 167746 | FRS 05 | HG | 90 | 95 | 25 | A RICHIESTA |
| 167754 | FRS 05 | HG | 100 | 105 | 20 | A RICHIESTA |
| 167757 | FRS 05 | HG | 105 | 110 | 5,6 | A RICHIESTA |
| 167762 | FRS 05 | HG | 110 | 115 | 5,6 | A RICHIESTA |
| 167763 | FRS 05 | HG | 110 | 115 | 9,7 | A RICHIESTA |
| 167766 | FRS 05 | HG | 110 | 115 | 25 | A RICHIESTA |
| 167784 | FRS 05 | HG | 125 | 130 | 30 | A RICHIESTA |
| 167786 | FRS 05 | HG | 130 | 135 | 9,7 | A RICHIESTA |
| 167794 | FRS 05 | HG | 140 | 145 | 9,7 | A RICHIESTA |
| 167795 | FRS 05 | HG | 140 | 145 | 15 | A RICHIESTA |
| 167796 | FRS 05 | HG | 140 | 145 | 20 | A RICHIESTA |
| 167797 | FRS 05 | HG | 140 | 145 | 25 | A RICHIESTA |
| 167802 | FRS 05 | HG | 150 | 155 | 9,7 | A RICHIESTA |
| 167803 | FRS 05 | HG | 150 | 155 | 15 | A RICHIESTA |
| 167805 | FRS 05 | HG | 150 | 155 | 25 | A RICHIESTA |
| 167806 | FRS 05 | HG | 150 | 155 | 30 | A RICHIESTA |
| 167810 | FRS 05 | HG | 155 | 160 | 30 | A RICHIESTA |
| 167813 | FRS 05 | HG | 160 | 165 | 20 | A RICHIESTA |
| 167816 | FRS 05 | HG | 165 | 170 | 9,7 | A RICHIESTA |
| 167817 | FRS 05 | HG | 165 | 170 | 20 | A RICHIESTA |
| 167819 | FRS 05 | HG | 170 | 175 | 9,7 | A RICHIESTA |

# ANELLO GUIDA STELO - FRS 05

RESINA FENOLICA (HG)

| CODICE | TIPO | MAT. | d mm | D mm | L mm | LISTINO 5-2016 X 100 PCS € |
|---|---|---|---|---|---|---|
| 167821 | FRS 05 | HG | 170 | 175 | 20 | A RICHIESTA |
| 167826 | FRS 05 | HG | 175 | 180 | 20 | A RICHIESTA |
| 167827 | FRS 05 | HG | 180 | 185 | 9,7 | A RICHIESTA |
| 167828 | FRS 05 | HG | 180 | 185 | 15 | A RICHIESTA |
| 167829 | FRS 05 | HG | 180 | 185 | 20 | A RICHIESTA |
| 167836 | FRS 05 | HG | 185 | 190 | 9,7 | A RICHIESTA |
| 167837 | FRS 05 | HG | 185 | 190 | 20 | A RICHIESTA |
| 167838 | FRS 05 | HG | 185 | 190 | 25 | A RICHIESTA |
| 167839 | FRS 05 | HG | 190 | 195 | 15 | A RICHIESTA |
| 167840 | FRS 05 | HG | 190 | 195 | 20 | A RICHIESTA |
| 167841 | FRS 05 | HG | 190 | 195 | 25 | A RICHIESTA |
| 167843 | FRS 05 | HG | 200 | 205 | 20 | A RICHIESTA |
| 167844 | FRS 05 | HG | 200 | 205 | 25 | A RICHIESTA |
| 167845 | FRS 05 | HG | 200 | 205 | 30 | A RICHIESTA |
| 167847 | FRS 05 | HG | 205 | 210 | 9,7 | A RICHIESTA |
| 167848 | FRS 05 | HG | 210 | 215 | 15 | A RICHIESTA |
| 167849 | FRS 05 | HG | 210 | 215 | 20 | A RICHIESTA |
| 167850 | FRS 05 | HG | 210 | 215 | 25 | A RICHIESTA |
| 167851 | FRS 05 | HG | 210 | 215 | 30 | A RICHIESTA |
| 167853 | FRS 05 | HG | 220 | 225 | 15 | A RICHIESTA |
| 167854 | FRS 05 | HG | 220 | 225 | 20 | A RICHIESTA |
| 167857 | FRS 05 | HG | 225 | 230 | 20 | A RICHIESTA |
| 167861 | FRS 05 | HG | 230 | 235 | 9,7 | A RICHIESTA |
| 167862 | FRS 05 | HG | 230 | 235 | 15 | A RICHIESTA |
| 167863 | FRS 05 | HG | 230 | 235 | 20 | A RICHIESTA |
| 167866 | FRS 05 | HG | 235 | 240 | 9,7 | A RICHIESTA |
| 167868 | FRS 05 | HG | 235 | 240 | 25 | A RICHIESTA |
| 167871 | FRS 05 | HG | 240 | 245 | 25 | A RICHIESTA |
| 167873 | FRS 05 | HG | 250 | 255 | 15 | A RICHIESTA |
| 167874 | FRS 05 | HG | 250 | 255 | 20 | A RICHIESTA |
| 167876 | FRS 05 | HG | 250 | 255 | 30 | A RICHIESTA |
| 167877 | FRS 05 | HG | 255 | 260 | 9,7 | A RICHIESTA |
| 167878 | FRS 05 | HG | 255 | 260 | 20 | A RICHIESTA |
| 167881 | FRS 05 | HG | 260 | 265 | 9,7 | A RICHIESTA |
| 167240 | FRS 05 | HG | 260 | 265 | 15 | A RICHIESTA |
| 167882 | FRS 05 | HG | 260 | 265 | 20 | A RICHIESTA |
| 167883 | FRS 05 | HG | 260 | 265 | 25 | A RICHIESTA |
| 167884 | FRS 05 | HG | 260 | 265 | 30 | A RICHIESTA |
| 167890 | FRS 05 | HG | 270 | 275 | 15 | A RICHIESTA |
| 167891 | FRS 05 | HG | 270 | 275 | 20 | A RICHIESTA |
| 167892 | FRS 05 | HG | 270 | 275 | 25 | A RICHIESTA |
| 167896 | FRS 05 | HG | 280 | 285 | 9,7 | A RICHIESTA |
| 167897 | FRS 05 | HG | 280 | 285 | 15 | A RICHIESTA |
| 167899 | FRS 05 | HG | 280 | 285 | 25 | A RICHIESTA |
| 167903 | FRS 05 | HG | 285 | 290 | 20 | A RICHIESTA |
| 167905 | FRS 05 | HG | 285 | 290 | 30 | A RICHIESTA |
| 167907 | FRS 05 | HG | 290 | 295 | 15 | A RICHIESTA |
| 167909 | FRS 05 | HG | 290 | 295 | 25 | A RICHIESTA |

# Fascia guida

PTFE/BRONZO

FB 10

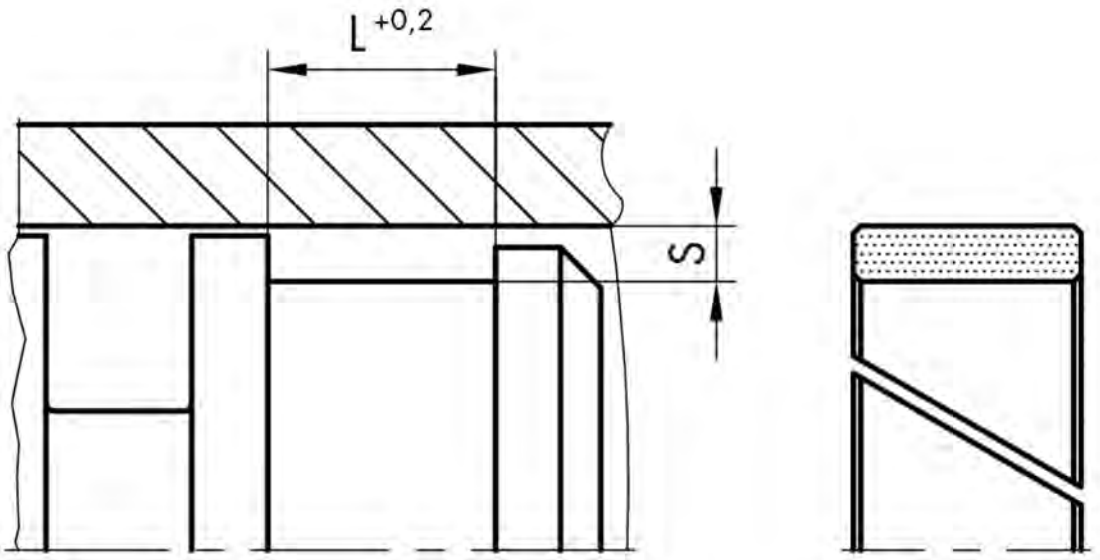
L +0,2
S

# FASCIA GUIDA - FB 10

| CODICE | TIPO | MATERIALE | LUNGHEZZA ROTOLO mt | L | S | LISTINO 5-2016 X 1 mt € |
|---|---|---|---|---|---|---|
| 190367 | FB 10 | PTFE | 35 | 4 | 1,55 | 6,72 |
| 190368 | FB 10 | PTFE | 25 | 5,6 | 2,00 | 10,75 |
| 190369 | FB 10 | PTFE | 25 | 8 | 2,00 | 13,53 |
| 190370 | FB 10 | PTFE | 25 | 10 | 2,00 | 16,22 |
| 190371 | FB 10 | PTFE | 25 | 12 | 2,00 | 18,28 |
| 190372 | FB 10 | PTFE | 25 | 15 | 2,00 | 22,13 |
| 190373 | FB 10 | PTFE | 10 | 5,6 | 2,50 | 13,20 |
| 190374 | FB 10 | PTFE | 10 | 9,7 | 2,50 | 20,34 |
| 190375 | FB 10 | PTFE | 10 | 12,7 | 2,50 | 24,73 |
| 190376 | FB 10 | PTFE | 10 | 15 | 2,50 | 28,49 |
| 190377 | FB 10 | PTFE | 10 | 20 | 2,50 | 36,92 |
| 190378 | FB 10 | PTFE | 10 | 25 | 2,50 | 43,91 |
| 190379 | FB 10 | PTFE | 10 | 30 | 2,50 | 51,88 |
| 190380 | FB 10 | PTFE | 10 | 40 | 2,50 | 68,01 |
| 190381 | FB 10 | PTFE | 8 | 9,7 | 3,00 | 24,91 |
| 190382 | FB 10 | PTFE | 8 | 12,7 | 3,00 | 30,20 |
| 190383 | FB 10 | PTFE | 8 | 15 | 3,00 | 35,04 |
| 190384 | FB 10 | PTFE | 8 | 20 | 3,00 | 45,52 |
| 190385 | FB 10 | PTFE | 8 | 25 | 3,00 | 54,21 |
| 190386 | FB 10 | PTFE | 8 | 30 | 3,00 | 64,25 |
| 190387 | FB 10 | PTFE | 6 | 9,7 | 4,00 | 33,78 |
| 190388 | FB 10 | PTFE | 6 | 15 | 4,00 | 47,85 |
| 190389 | FB 10 | PTFE | 6 | 25 | 4,00 | 79,84 |

# Fascia guida

PTFE/BRONZO (FINITURA DIAMANTATA)

FB 01

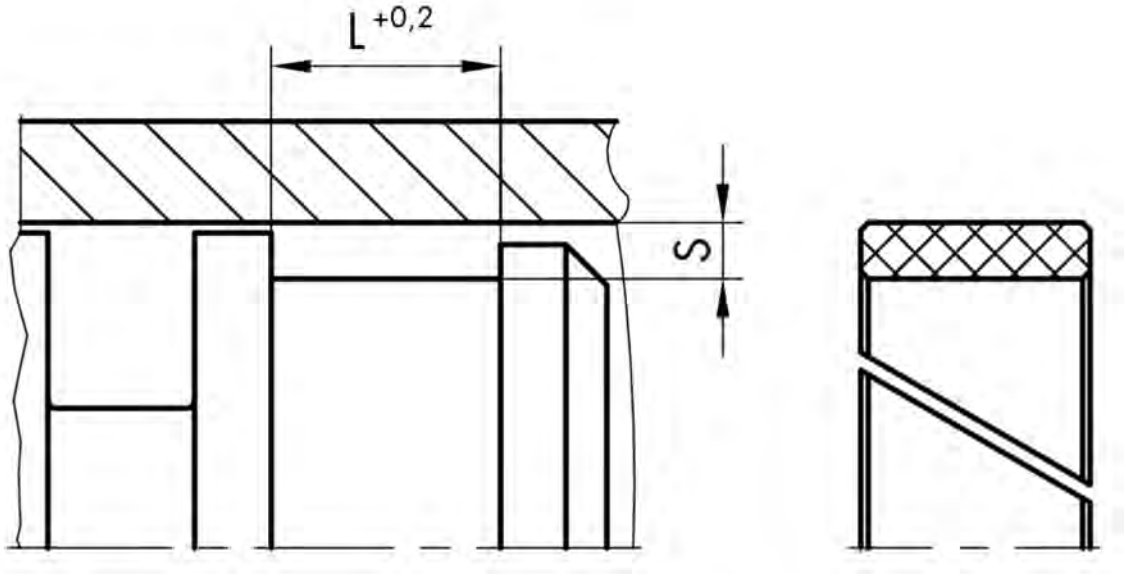
L +0,2
S

PTFE/BRONZO
(Finitura Diamantata)

# FASCIA GUIDA - FB 01

| CODICE | TIPO | MATERIALE | LUNGHEZZA ROTOLO mt | L | S | LISTINO 5-2016 X 1 mt € |
|---|---|---|---|---|---|---|
| 125534 | FB 01 | PTFE | 20,3 | 2,5 | 1,55 | 7,87 |
| 124937 | FB 01 | PTFE | 20,3 | 4 | 1,55 | 9,00 |
| 126882 | FB 01 | PTFE | 21,5 | 5,6 | 1,5 | 9,40 |
| 172753 | FB 01 | PTFE | 16 | 5,6 | 2 | 13,00 |
| 172754 | FB 01 | PTFE | 16 | 8 | 2 | 18,60 |
| 126855 | FB 01 | PTFE | 16 | 10 | 2 | 20,73 |
| 126903 | FB 01 | PTFE | 16 | 12 | 2 | 24,67 |
| 120898 | FB 01 | PTFE | 16 | 15 | 2 | 31,53 |
| 118157 | FB 01 | PTFE | 12,5 | 5,6 | 2,5 | 14,18 |
| 126912 | FB 01 | PTFE | 12,5 | 6,3 | 2,5 | 17,20 |
| 116298 | FB 01 | PTFE | 12,5 | 9,7 | 2,5 | 23,00 |
| 163511 | FB 01 | PTFE | 12,5 | 12,7 | 2,5 | 32,40 |
| 118158 | FB 01 | PTFE | 12,5 | 15 | 2,5 | 34,13 |
| 118159 | FB 01 | PTFE | 12,5 | 20 | 2,5 | 50,20 |
| 120558 | FB 01 | PTFE | 12,5 | 25 | 2,5 | 67,73 |
| 126798 | FB 01 | PTFE | 12,5 | 30 | 2,5 | 110,13 |
| 125724 | FB 01 | PTFE | 12,5 | 40 | 2,5 | 132,73 |
| 172755 | FB 01 | PTFE | 10 | 9,7 | 3 | 35,93 |
| 172756 | FB 01 | PTFE | 10 | 12,7 | 3 | 37,93 |
| 126919 | FB 01 | PTFE | 10 | 15 | 3 | 53,27 |
| 126920 | FB 01 | PTFE | 10 | 20 | 3 | 70,33 |
| 125875 | FB 01 | PTFE | 10 | 25 | 3 | 84,93 |
| 125455 | FB 01 | PTFE | 10 | 30 | 3 | 100,80 |
| 120899 | FB 01 | PTFE | 7,5 | 9,7 | 4 | 48,73 |
| 159929 | FB 01 | PTFE | 7,5 | 15 | 4 | 129,07 |
| 124589 | FB 01 | PTFE | 7,5 | 25 | 4 | 168,67 |

# Fascia guida

RESINA FENOLICA (HG)

FB 05

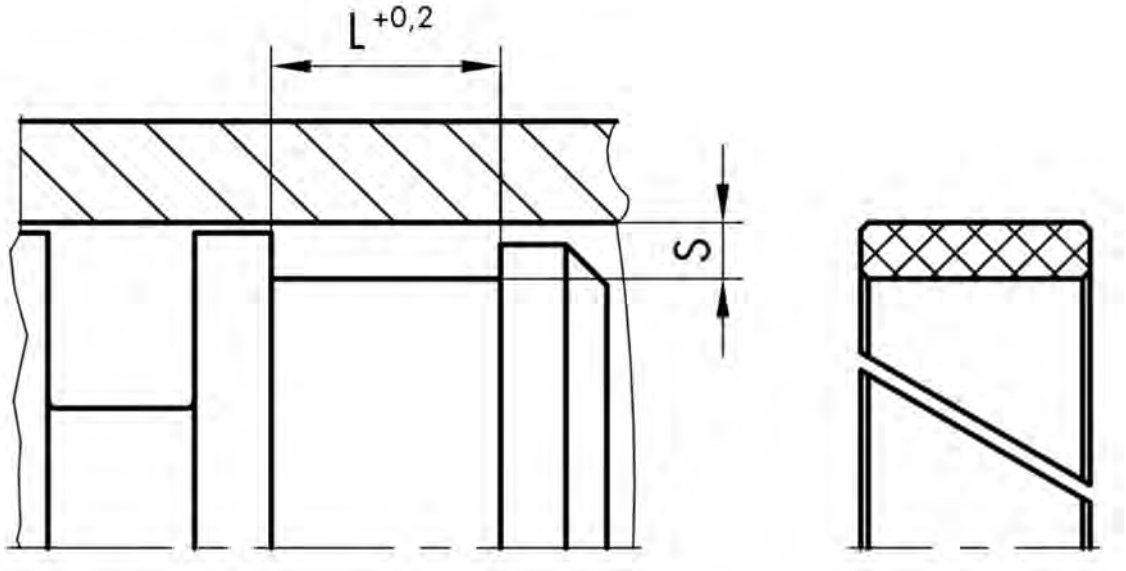
L +0,2
S

# FASCIA GUIDA - FB 05

| CODICE | TIPO | MATERIALE | LUNGHEZZA ROTOLO mt | L | S | LISTINO 5-2016 X 1 mt € |
|---|---|---|---|---|---|---|
| 193911 | FB 05 | HG | 5,5 | 5,6 | 2,5 | 40,48 |
| 193912 | FB 05 | HG | 5,5 | 9,7 | 2,5 | 43,80 |
| 193913 | FB 05 | HG | 5,5 | 15 | 2,5 | 52,32 |
| 193914 | FB 05 | HG | 5,5 | 20 | 2,5 | 74,05 |
| 193910 | FB 05 | HG | 5,5 | 25 | 2,5 | 76,18 |

# Guarnizione pistone

NBR 90 TELA IMPREGNATA/NBR 90

KDS 01

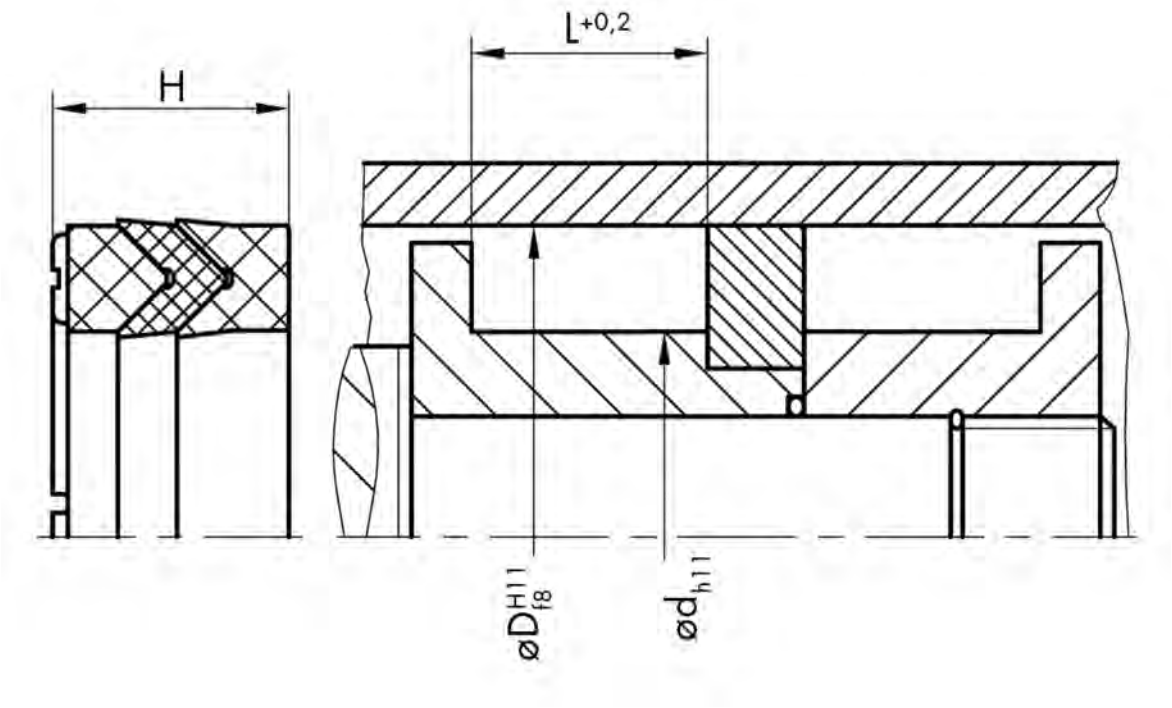
H
L+0,2
øD H11 f8
ød h11

NBR 90 TELA IMPREGNATA/
NBR 90

# GUARNIZIONE PISTONE - KDS 01

| CODICE | TIPO | MATERIALE | D mm | d mm | H mm | LISTINO 5-2016 X 100 PCS € |
|---|---|---|---|---|---|---|
| 77285 | KDS 01 | NBR F | 20 | 10 | 8,9 | 870,44 |
| 77286 | KDS 01 | NBR F | 22 | 12 | 8,9 | 870,44 |
| 77287 | KDS 01 | NBR F | 25 | 15 | 8,9 | 870,44 |
| 77288 | KDS 01 | NBR F | 28 | 18 | 8,9 | 870,44 |
| 77289 | KDS 01 | NBR F | 32 | 20 | 10,4 | 966,97 |
| 77290 | KDS 01 | NBR F | 35 | 23 | 10,4 | 966,97 |
| 77291 | KDS 01 | NBR F | 36 | 24 | 10,4 | 966,97 |
| 68 | KDS 01 | NBR F | 40 | 25 | 11 | 1.063,51 |
| 77292 | KDS 01 | NBR F | 42 | 27 | 11 | 1.063,51 |
| 77293 | KDS 01 | NBR F | 45 | 30 | 11 | 1.063,51 |
| 69 | KDS 01 | NBR F | 50 | 35 | 11 | 1.063,51 |
| 70 | KDS 01 | NBR F | 55 | 40 | 11 | 1.063,51 |
| 77294 | KDS 01 | NBR F | 56 | 41 | 11 | 1.063,51 |
| 71 | KDS 01 | NBR F | 60 | 45 | 11 | 1.063,51 |
| 72 | KDS 01 | NBR F | 63 | 48 | 12,5 | 1.063,51 |
| 73 | KDS 01 | NBR F | 70 | 50 | 14,6 | 1.353,11 |
| 74 | KDS 01 | NBR F | 80 | 60 | 14,6 | 1.860,53 |
| 75 | KDS 01 | NBR F | 90 | 70 | 20,6 | 2.125,99 |
| 76 | KDS 01 | NBR F | 100 | 80 | 20,6 | 2.258,73 |
| 77 | KDS 01 | NBR F | 110 | 90 | 20,6 | 2.362,21 |
| 77295 | KDS 01 | NBR F | 115 | 95 | 20,6 | 2.641,18 |
| 78 | KDS 01 | NBR F | 125 | 100 | 25 | 3.536,16 |
| 79 | KDS 01 | NBR F | 140 | 115 | 25 | 4.420,92 |
| 80 | KDS 01 | NBR F | 150 | 120 | 28 | 5.128,15 |
| 81 | KDS 01 | NBR F | 160 | 130 | 28 | 5.660,72 |
| 82 | KDS 01 | NBR F | 180 | 150 | 30,5 | 6.542,62 |
| 83 | KDS 01 | NBR F | 200 | 170 | 32,5 | 8.841,84 |
| 78574 | KDS 01 | NBR F | 250 | 220 | 32,5 | 14.502,56 |
| 78576 | KDS 01 | NBR F | 300 | 270 | 32,5 | 17.370,15 |

# Guarnizione pistone

NBR 80/PA/TELA IMPREGNATA NBR 90

KK 22

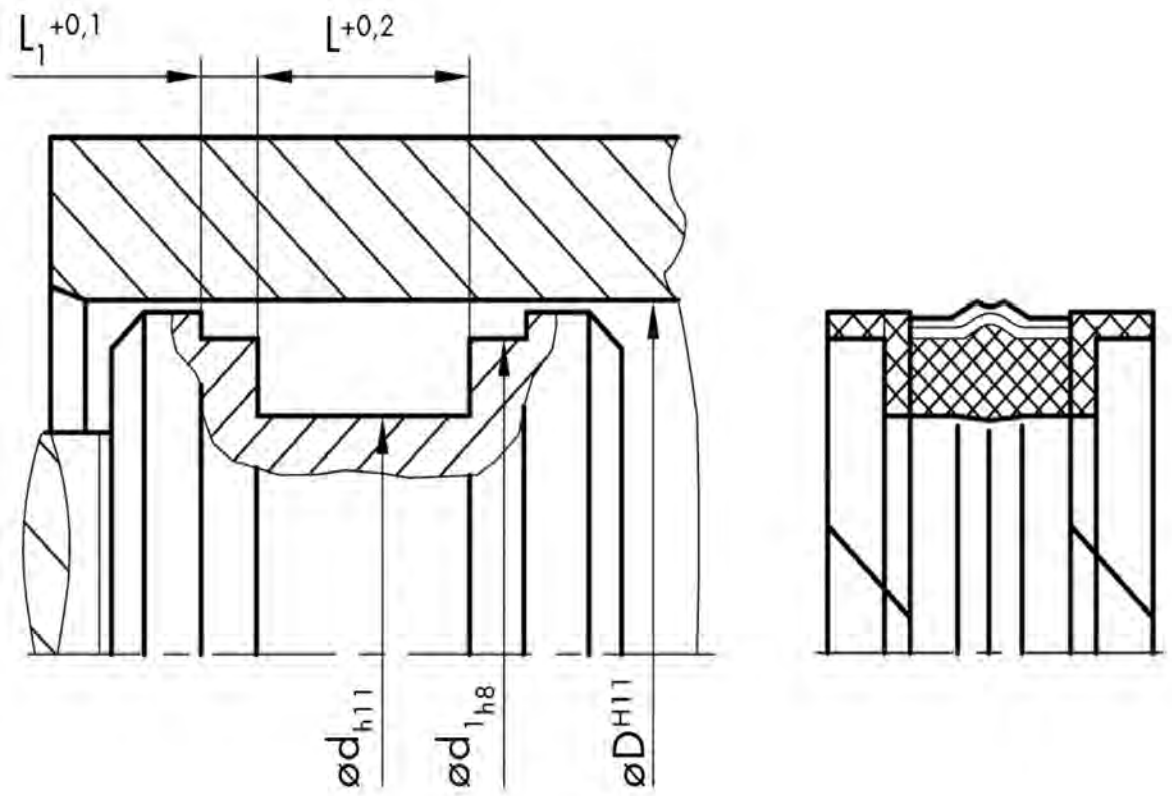
L1 +0,1
L +0,2
ød h11
ød1 h8
øD H11

NBR 80/PA/
TELA IMPREGNATA NBR 90

# GUARNIZIONE PISTONE - KK 22

| CODICE | TIPO | D mm | d mm | L mm | LISTINO 5-2016 X 100 PCS € |
|---|---|---|---|---|---|
| 189379 | KK 22 | 45 | 37 | 15,5 | 1.832,29 |
| 189675 | KK 22 | 50 | 38 | 20,5 | 1.892,57 |
| 189678 | KK 22 | 60 | 48 | 20,5 | 2.408,29 |
| 189219 | KK 22 | 70 | 58 | 20,5 | 2.538,36 |
| 189380 | KK 22 | 80 | 66 | 22,5 | 2.560,79 |
| 189682 | KK 22 | 90 | 76 | 22,5 | 2.610,21 |
| 189683 | KK 22 | 100 | 86 | 22,5 | 3.070,00 |
| 189684 | KK 22 | 110 | 96 | 22,5 | 3.871,93 |
| 189220 | KK 22 | 120 | 106 | 22,5 | 4.234,14 |
| 189685 | KK 22 | 125 | 108 | 26,5 | 4.974,14 |
| 189302 | KK 22 | 140 | 123 | 26,5 | 5.423,79 |
| 189686 | KK 22 | 160 | 143 | 26,5 | 6.306,29 |
| 189687 | KK 22 | 180 | 163 | 26,5 | 6.551,36 |
| 189688 | KK 22 | 200 | 180 | 31,5 | 7.013,71 |

# Guarnizione pistone

NBR 90

KNA 23

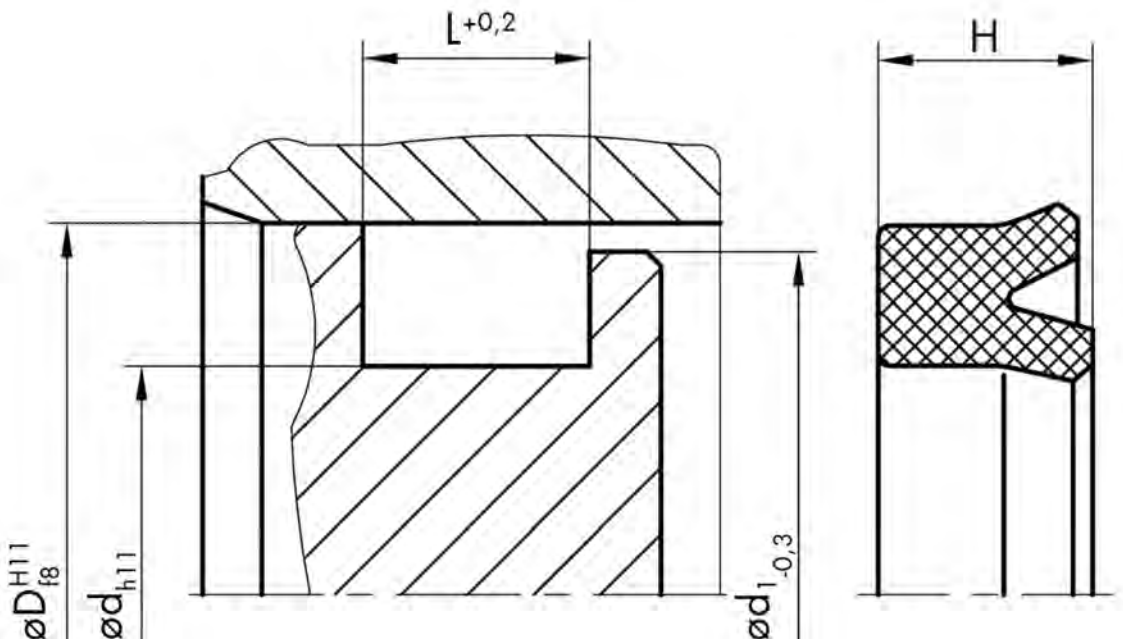
øD H11 f8
ød h11
L +0,2
ød1 -0,3
H

# GUARNIZIONE PISTONE - KNA 23

| CODICE | TIPO | MAT. | SHORE | D mm | d mm | L mm | H mm | LISTINO 5-2016 X 100 PCS € |
|---|---|---|---|---|---|---|---|---|
| 174309 | KNA 23 | NBR | 90 | 14 | 8 | 5,5 | 4,5 | 117,82 |
| 172929 | KNA 23 | NBR | 90 | 17,46 | 12,05 | 4,77 | 3,17 | 117,82 |
| 188337 | KNA 23 | NBR | 90 | 19,05 | 12,7 | 4,77 | 3,17 | 117,82 |
| 188828 | KNA 23 | NBR | 90 | 20 | 12 | 6,3 | 5,5 | 148,57 |
| 172932 | KNA 23 | NBR | 90 | 20,63 | 14,28 | 7,14 | 6,35 | 148,57 |
| 192629 | KNA 23 | NBR | 90 | 22,22 | 12,7 | 7,14 | 6,35 | 148,57 |
| 188639 | KNA 23 | NBR | 90 | 25 | 17 | 6,5 | 5,5 | 153,76 |
| 196680 | KNA 23 | NBR | 90 | 26,99 | 17,46 | 7,14 | 6,35 | 153,76 |
| 172935 | KNA 23 | NBR | 90 | 28,57 | 19,05 | 7,14 | 6,35 | 153,76 |
| 196679 | KNA 23 | NBR | 90 | 31,75 | 19,05 | 7,14 | 6,35 | 169,09 |
| 190274 | KNA 23 | NBR | 90 | 32 | 24 | 6,5 | 5,5 | 169,09 |
| 194651 | KNA 23 | NBR | 90 | 34,92 | 22,22 | 7,14 | 6,35 | 169,09 |
| 172939 | KNA 23 | NBR | 90 | 36,51 | 25,4 | 7,14 | 6,35 | 169,09 |
| 172942 | KNA 23 | NBR | 90 | 38 | 28 | 8 | 7 | 204,96 |
| 172940 | KNA 23 | NBR | 90 | 38,1 | 25,4 | 8,72 | 7,93 | 199,85 |
| 193604 | KNA 23 | NBR | 90 | 39,69 | 26,99 | 7,14 | 6,35 | 204,96 |
| 174310 | KNA 23 | NBR | 90 | 40 | 28 | 11 | 10 | 204,96 |
| 172944 | KNA 23 | NBR | 90 | 41,27 | 30,16 | 7,14 | 6,35 | 204,96 |
| 172945 | KNA 23 | NBR | 90 | 42,86 | 30,16 | 10,31 | 9,52 | 210,07 |
| 172947 | KNA 23 | NBR | 90 | 44,45 | 34,92 | 8 | 7 | 204,96 |
| 172948 | KNA 23 | NBR | 90 | 49,21 | 35,23 | 10,31 | 9,52 | 235,71 |
| 190539 | KNA 23 | NBR | 90 | 50,8 | 41,27 | 7,93 | 7,14 | 256,24 |
| 172949 | KNA 23 | NBR | 90 | 53,97 | 38,1 | 10,31 | 9,52 | 266,39 |
| 172951 | KNA 23 | NBR | 90 | 53,97 | 41,27 | 10,31 | 9,52 | 261,28 |
| 188234 | KNA 23 | NBR | 90 | 55 | 45 | 8 | 7 | 256,24 |
| 172952 | KNA 23 | NBR | 90 | 57,15 | 41,27 | 10,31 | 9,52 | 266,39 |
| 194652 | KNA 23 | NBR | 90 | 57,15 | 44,45 | 7,14 | 6,35 | 266,39 |
| 192729 | KNA 23 | NBR | 90 | 60,32 | 47,62 | 7,14 | 6,35 | 307,37 |
| 172954 | KNA 23 | NBR | 90 | 63,5 | 45,7 | 10,31 | 8,85 | 307,37 |
| 172956 | KNA 23 | NBR | 90 | 63,5 | 47,62 | 10,31 | 9,52 | 327,82 |
| 190317 | KNA 23 | NBR | 90 | 65 | 55 | 8 | 7 | 281,73 |
| 172957 | KNA 23 | NBR | 90 | 66,67 | 50,8 | 10,31 | 8,85 | 307,37 |
| 172958 | KNA 23 | NBR | 90 | 69,85 | 50,8 | 13,48 | 12,7 | 338,12 |
| 73498 | KNA 23 | NBR | 90 | 70 | 50 | 15 | 14 | 240,60 |
| 193733 | KNA 23 | NBR | 90 | 70 | 58 | 9,5 | 8,5 | 307,37 |
| 196990 | KNA 23 | NBR | 90 | 73,02 | 63,5 | 7,14 | 5,56 | 317,59 |
| 174315 | KNA 23 | NBR | 90 | 75 | 65 | 8,5 | 7,5 | 297,14 |
| 172962 | KNA 23 | NBR | 90 | 76,2 | 58,04 | 10,31 | 8,73 | 348,34 |
| 172965 | KNA 23 | NBR | 90 | 79,37 | 66,67 | 7,14 | 6,35 | 358,57 |
| 174314 | KNA 23 | NBR | 90 | 80 | 64 | 9 | 8 | 348,34 |
| 188177 | KNA 23 | NBR | 90 | 80 | 68 | 9,5 | 8,5 | 343,23 |
| 172966 | KNA 23 | NBR | 90 | 83 | 71,9 | 8,5 | 7,5 | 368,87 |
| 172968 | KNA 23 | NBR | 90 | 85,72 | 73,02 | 10,31 | 9,52 | 373,98 |
| 188884 | KNA 23 | NBR | 90 | 90 | 78 | 9,5 | 8,5 | 394,43 |
| 172970 | KNA 23 | NBR | 90 | 95,25 | 76,99 | 9,12 | 7,4 | 403,64 |
| 190008 | KNA 23 | NBR | 90 | 98,42 | 85,72 | 10,31 | 9,52 | 435,48 |
| 190275 | KNA 23 | NBR | 90 | 100 | 88 | 9,5 | 8,5 | 420,07 |
| 172973 | KNA 23 | NBR | 90 | 101,6 | 82,55 | 13,48 | 12,7 | 435,48 |
| 188640 | KNA 23 | NBR | 90 | 101,6 | 88,9 | 10,31 | 9,52 | 425,18 |

# GUARNIZIONE PISTONE - KNA 23

NBR 90

| CODICE | TIPO | MAT. | SHORE | D mm | d mm | L mm | H mm | LISTINO 5-2016 X 100 PCS € |
|---|---|---|---|---|---|---|---|---|
| 196421 | KNA 23 | NBR | 90 | 120 | 105 | 11 | 10 | 594,28 |
| 172979 | KNA 23 | NBR | 90 | 123,82 | 111,12 | 10,31 | 9,52 | 522,55 |
| 189224 | KNA 23 | NBR | 90 | 125 | 110 | 11 | 10 | 512,32 |
| 73608 | KNA 23 | NBR | 90 | 125 | 115 | 8,2 | 7,2 | 565,72 |
| 172977 | KNA 23 | NBR | 90 | 127 | 101,6 | 17,47 | 15,87 | 604,58 |
| 172980 | KNA 23 | NBR | 90 | 130,17 | 117,5 | 10,31 | 9,52 | 537,96 |
| 193209 | KNA 23 | NBR | 90 | 149,22 | 136,52 | 10,31 | 9,52 | 891,42 |
| 188641 | KNA 23 | NBR | 90 | 160 | 145 | 11 | 10 | 870,89 |
| 188328 | KNA 23 | NBR | 90 | 200 | 180 | 15 | 14 | 1.608,70 |

# Guarnizione pistone

NBR/TPC/POM

KK 03

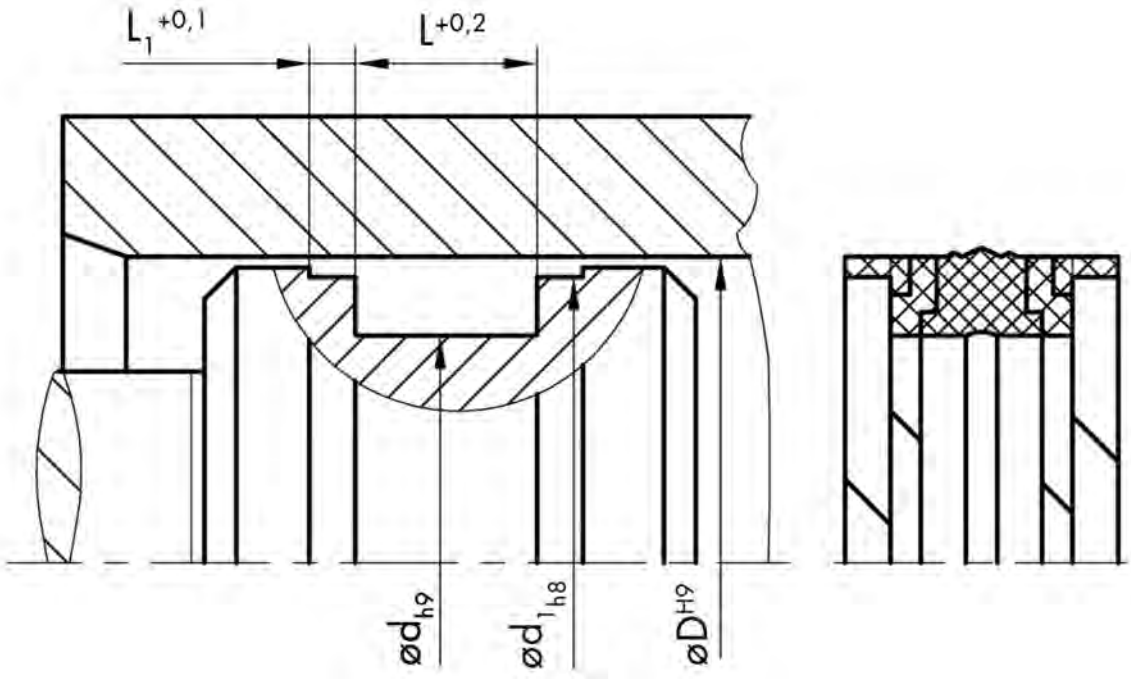
L1 +0,1
L +0,2
ød h9
ød1 h8
øD H9

# GUARNIZIONE PISTONE - KK 03

| CODICE NUOVO | TIPO | D mm | d mm | L mm | L1 mm | LISTINO 5-2016 X 100 PCS € |
|---|---|---|---|---|---|---|
| 188848 | KK 03 | 20 | 11 | 13,5 | 2,1 | 577,77 |
| 171391 | KK 03 | 22 | 13 | 13,5 | 2,1 | 538,03 |
| 171392 | KK 03 | 25 | 15 | 12 | 4 | 545,30 |
| 192289 | KK 03 | 25 | 15 | 12,5 | 4 | 545,30 |
| 192288 | KK 03 | 25 | 15 | 16,4 | 6,35 | 553,46 |
| 44395 | KK 03 | 25 | 16 | 13,5 | 2,1 | 556,33 |
| 188851 | KK 03 | 25 | 17 | 10 | 4 | 545,30 |
| 188852 | KK 03 | 25 | 17 | 13,5 | 3,2 | 545,93 |
| 171396 | KK 03 | 28 | 19 | 13,5 | 2,1 | 566,74 |
| 188399 | KK 03 | 30 | 17 | 15,4 | 6,35 | 565,92 |
| 192290 | KK 03 | 30 | 21 | 13,5 | 2,1 | 552,03 |
| 171397 | KK 03 | 30 | 22 | 13,5 | 3,2 | 566,74 |
| 171398 | KK 03 | 32 | 22 | 12,5 | 4 | 581,18 |
| 190547 | KK 03 | 32 | 22 | 15,5 | 2,6 | 551,94 |
| 192737 | KK 03 | 32 | 22 | 16,4 | 6,35 | 551,94 |
| 190284 | KK 03 | 32 | 24 | 10 | 4 | 556,33 |
| 188363 | KK 03 | 32 | 24 | 15,5 | 3,1 | 585,04 |
| 192291 | KK 03 | 35 | 25 | 16,4 | 6,35 | 587,19 |
| 171400 | KK 03 | 35 | 27 | 15,5 | 3,2 | 609,88 |
| 188362 | KK 03 | 40 | 24 | 18,4 | 6,35 | 625,85 |
| 187843 | KK 03 | 40 | 26 | 15,5 | 2,6 | 636,88 |
| 188360 | KK 03 | 40 | 30 | 16,4 | 6,35 | 634,64 |
| 188400 | KK 03 | 40 | 32 | 10 | 4 | 645,77 |
| 192200 | KK 03 | 40 | 32 | 15,5 | 3,2 | 606,39 |
| 171370 | KK 03 | 42 | 28 | 15,5 | 2,6 | 660,12 |
| 45027 | KK 03 | 45 | 29 | 18,4 | 6,35 | 640,20 |
| 188831 | KK 03 | 45 | 31 | 15,5 | 2,6 | 673,30 |
| 189293 | KK 03 | 45 | 35 | 16,4 | 6,35 | 667,83 |
| 171371 | KK 03 | 45 | 37 | 15,5 | 3,2 | 695,91 |
| 187844 | KK 03 | 50 | 34 | 18,4 | 6,35 | 642,71 |
| 187845 | KK 03 | 50 | 34 | 20,5 | 3,1 | 673,48 |
| 189009 | KK 03 | 50 | 35 | 20 | 5 | 724,97 |
| 187846 | KK 03 | 50 | 38 | 20,5 | 4,2 | 680,75 |
| 188369 | KK 03 | 50 | 40 | 12,5 | 4 | 696,54 |
| 194090 | KK 03 | 50,8 | 34,92 | 19,05 | 6,35 | 739,50 |
| 194092 | KK 03 | 50,8 | 41,27 | 11,1 | 3,81 | 728,47 |
| 187847 | KK 03 | 55 | 39 | 18,4 | 6,35 | 744,17 |
| 188368 | KK 03 | 55 | 39 | 20,5 | 3,1 | 769,64 |
| 192292 | KK 03 | 55 | 45 | 12,5 | 4 | 824,99 |
| 195598 | KK 03 | 56 | 40 | 20,5 | 3,1 | 774,85 |
| 187848 | KK 03 | 60 | 44 | 18,4 | 6,35 | 765,00 |
| 194088 | KK 03 | 60 | 44 | 20,5 | 3,1 | 765,00 |
| 188367 | KK 03 | 60 | 48 | 20,5 | 4,2 | 827,95 |
| 171377 | KK 03 | 60,32 | 44,45 | 19,05 | 6,35 | 860,96 |
| 187849 | KK 03 | 63 | 47 | 18,4 | 6,35 | 825,71 |
| 189756 | KK 03 | 63 | 47 | 19,4 | 6,35 | 838,93 |
| 192293 | KK 03 | 63 | 47 | 20,5 | 3,1 | 841,67 |
| 187850 | KK 03 | 63 | 48 | 20 | 5 | 875,31 |
| 187851 | KK 03 | 63 | 51 | 20,5 | 4,2 | 821,40 |

# GUARNIZIONE PISTONE - KK 03

NBR/TCP/POM

| CODICE NUOVO | TIPO | D mm | d mm | L mm | L 1 mm | LISTINO 5-2016 X 100 PCS € |
|---|---|---|---|---|---|---|
| 188024 | KK 03 | 63 | 53 | 12,5 | 4 | 883,03 |
| 192294 | KK 03 | 63,5 | 47,62 | 19,05 | 6,35 | 883,03 |
| 188371 | KK 03 | 63,5 | 53,97 | 11,1 | 3,81 | 882,49 |
| 188889 | KK 03 | 65 | 49 | 20,5 | 3,1 | 868,67 |
| 187852 | KK 03 | 65 | 50 | 18,4 | 6,35 | 915,72 |
| 187853 | KK 03 | 70 | 50 | 22,4 | 6,35 | 796,97 |
| 187854 | KK 03 | 70 | 54 | 20,5 | 3,1 | 889,04 |
| 188850 | KK 03 | 70 | 55 | 20 | 5 | 925,55 |
| 187855 | KK 03 | 70 | 58 | 20,5 | 4,2 | 883,03 |
| 187856 | KK 03 | 75 | 55 | 22,4 | 6,35 | 921,24 |
| 192295 | KK 03 | 75 | 59 | 20,5 | 3,1 | 956,85 |
| 188892 | KK 03 | 76,2 | 57,15 | 23,81 | 6,35 | 1.125,85 |
| 187857 | KK 03 | 80 | 60 | 22,4 | 6,35 | 947,01 |
| 189775 | KK 03 | 80 | 60 | 25 | 6,35 | 1.119,30 |
| 187858 | KK 03 | 80 | 62 | 22,5 | 3,6 | 1.059,65 |
| 188365 | KK 03 | 80 | 65 | 20 | 5 | 1.155,18 |
| 187859 | KK 03 | 80 | 66 | 22,4 | 5,2 | 1.062,43 |
| 188830 | KK 03 | 85 | 65 | 22,4 | 6,35 | 1.124,86 |
| 171362 | KK 03 | 85 | 75 | 20 | 4 | 1.104,95 |
| 187860 | KK 03 | 90 | 70 | 22,4 | 6,35 | 1.187,24 |
| 188890 | KK 03 | 90 | 72 | 22,5 | 3,2 | 1.225,24 |
| 188366 | KK 03 | 90 | 75 | 20 | 5 | 1.226,86 |
| 192297 | KK 03 | 90 | 76 | 22,4 | 5,2 | 1.179,67 |
| 190010 | KK 03 | 95 | 75 | 22,4 | 6,35 | 1.270,99 |
| 187861 | KK 03 | 100 | 75 | 22,4 | 6,35 | 1.373,59 |
| 189297 | KK 03 | 100 | 80 | 25 | 6,3 | 1.391,91 |
| 188955 | KK 03 | 100 | 80 | 25,4 | 6,35 | 1.399,62 |
| 187862 | KK 03 | 100 | 82 | 22,5 | 3,6 | 1.336,83 |
| 188370 | KK 03 | 100 | 85 | 20 | 5 | 1.400,70 |
| 190555 | KK 03 | 100 | 86 | 22,4 | 5,2 | 1.338,35 |
| 197395 | KK 03 | 101,6 | 82,55 | 23,81 | 6,35 | 1.452,46 |
| 192298 | KK 03 | 105 | 80 | 22,4 | 6,5 | 1.359,79 |
| 187863 | KK 03 | 110 | 85 | 22,4 | 6,35 | 1.527,15 |
| 188401 | KK 03 | 110 | 85 | 25,4 | 6,35 | 1.463,58 |
| 192857 | KK 03 | 110 | 90 | 25,3 | 9,52 | 1.456,49 |
| 188398 | KK 03 | 110 | 92 | 22,5 | 3,6 | 1.465,28 |
| 196583 | KK 03 | 110 | 95 | 20 | 5 | 1.456,49 |
| 188025 | KK 03 | 110 | 96 | 22,4 | 5,2 | 1.391,91 |
| 187864 | KK 03 | 115 | 90 | 22,4 | 6,35 | 1.390,74 |
| 189294 | KK 03 | 115 | 97 | 22,4 | 4,2 | 1.458,74 |
| 192299 | KK 03 | 120 | 95 | 22,4 | 6,35 | 1.495,51 |
| 24680 | KK 03 | 120 | 106 | 22,4 | 5,2 | 1.497,04 |
| 187865 | KK 03 | 125 | 100 | 25,4 | 6,35 | 1.477,75 |
| 192300 | KK 03 | 125 | 103 | 26,5 | 5,1 | 1.582,70 |
| 192301 | KK 03 | 125 | 105 | 25 | 6,35 | 1.571,22 |
| 189008 | KK 03 | 125 | 105 | 25,4 | 6,35 | 1.571,49 |
| 188361 | KK 03 | 125 | 108 | 26,5 | 7,2 | 1.578,40 |
| 188810 | KK 03 | 130 | 105 | 25,4 | 6,35 | 1.658,45 |
| 189296 | KK 03 | 130 | 105 | 25,4 | 9,52 | 1.658,45 |

# GUARNIZIONE PISTONE - KK 03

| CODICE NUOVO | TIPO | D mm | d mm | L mm | L1 mm | LISTINO 5-2016 X 100 PCS € |
|---|---|---|---|---|---|---|
| 188364 | KK 03 | 140 | 115 | 25,4 | 9,52 | 1.810,81 |
| 187866 | KK 03 | 140 | 115 | 25,4 | 6,35 | 1.810,81 |
| 194089 | KK 03 | 140 | 118 | 26,5 | 5,1 | 1.810,82 |
| 192303 | KK 03 | 140 | 120 | 25 | 6,35 | 1.815,12 |
| 188888 | KK 03 | 140 | 123 | 26,5 | 7,2 | 1.816,83 |
| 189322 | KK 03 | 150 | 128 | 26,5 | 5,1 | 2.164,15 |
| 194091 | KK 03 | 150 | 130 | 25,4 | 6,35 | 2.295,83 |
| 171404 | KK 03 | 150 | 133 | 26,5 | 7,2 | 2.288,66 |
| 188396 | KK 03 | 152,4 | 127 | 31,75 | 9,52 | 2.287,04 |
| 187867 | KK 03 | 160 | 135 | 25,4 | 9,52 | 2.310,19 |
| 171368 | KK 03 | 160 | 135 | 32 | 10 | 2.310,19 |
| 188027 | KK 03 | 160 | 138 | 26,5 | 5,1 | 2.314,40 |
| 193695 | KK 03 | 160 | 140 | 25 | 6,35 | 2.396,39 |
| 190011 | KK 03 | 160 | 143 | 26,5 | 7,2 | 2.310,01 |
| 189295 | KK 03 | 165 | 140 | 25,4 | 9,52 | 2.396,93 |
| 188393 | KK 03 | 170 | 145 | 25,4 | 12,7 | 2.478,11 |
| 188394 | KK 03 | 170 | 148 | 26,5 | 5,1 | 2.479,90 |
| 189478 | KK 03 | 180 | 150 | 35,4 | 6,35 | 2.719,77 |
| 188372 | KK 03 | 180 | 155 | 25,4 | 12,7 | 2.641,37 |
| 190270 | KK 03 | 180 | 158 | 26,5 | 5,1 | 2.663,61 |
| 192822 | KK 03 | 185 | 160 | 25,4 | 12,7 | 3.008,16 |
| 192305 | KK 03 | 190 | 165 | 25,4 | 12,7 | 2.975,60 |
| 192306 | KK 03 | 195 | 170 | 25,4 | 12,7 | 3.164,78 |
| 187868 | KK 03 | 200 | 170 | 35,4 | 6,35 | 3.300,32 |
| 188359 | KK 03 | 200 | 175 | 25,4 | 12,7 | 3.304,18 |
| 189479 | KK 03 | 200 | 175 | 31,5 | 6,6 | 3.300,32 |
| 187869 | KK 03 | 200 | 180 | 31,5 | 9,2 | 3.303,91 |
| 192307 | KK 03 | 210 | 185 | 25,4 | 12,7 | 3.509,68 |
| 187870 | KK 03 | 220 | 190 | 35,4 | 6,35 | 3.664,60 |
| 189768 | KK 03 | 220 | 195 | 25,4 | 12,7 | 3.550,14 |
| 188397 | KK 03 | 220 | 200 | 31,5 | 9,2 | 3.664,60 |
| 45048 | KK 03 | 230 | 205 | 25,4 | 12,7 | 3.998,47 |
| 190283 | KK 03 | 240 | 215 | 25,4 | 12,7 | 4.127,01 |
| 187871 | KK 03 | 250 | 220 | 35,4 | 6,35 | 4.331,89 |
| 188891 | KK 03 | 250 | 225 | 25,4 | 12,7 | 4.536,86 |
| 188849 | KK 03 | 280 | 250 | 35,4 | 9,52 | 14.371,26 |

# Guarnizione pistone

NBR 80/TELA IMPREGNATA NBR 90/POM

KNA 16

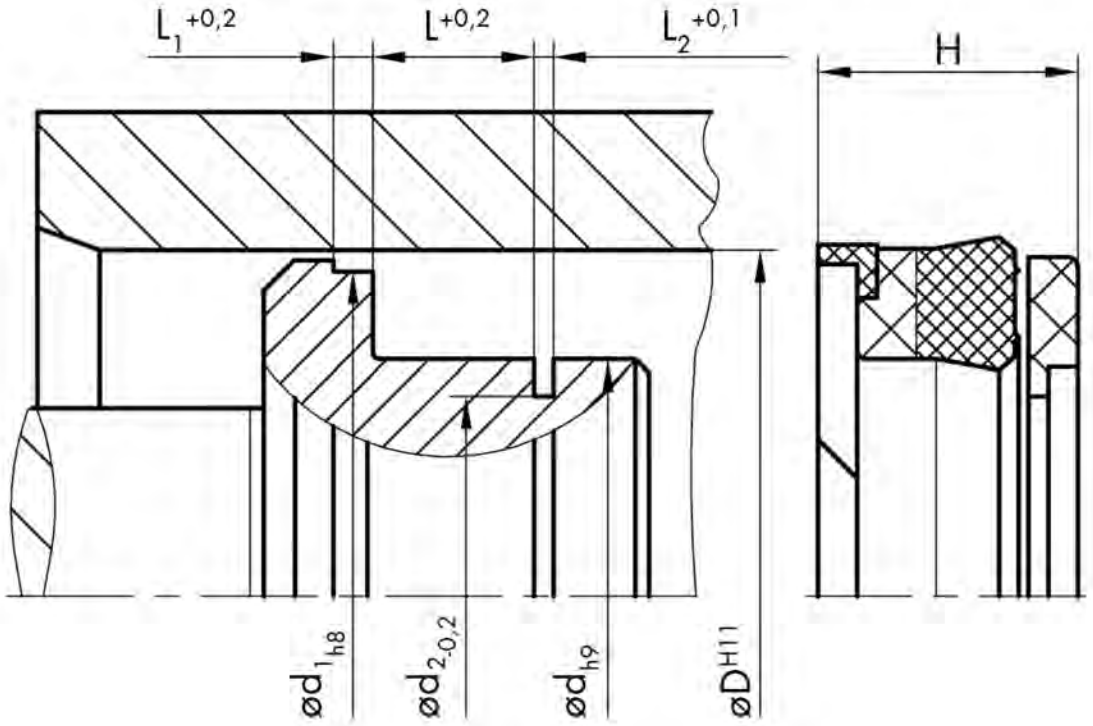
L1 +0,2
L +0,2
L2 +0,1
H
ød1 h8
ød2 -0,2
ød h9
øD H11

NBR 80/
TELA IMPREGNATA NBR 90/POM

# GUARNIZIONE PISTONE - KNA 16

| CODICE | TIPO | MAT. | D mm | d mm | L mm | L 1 mm | LISTINO 5-2016 X 100 PCS € |
|---|---|---|---|---|---|---|---|
| 65078 | KNA 16 | NBR | 50,00 | 30,00 | 14,50 | 6,35 | A RICHIESTA |
| 173490 | KNA 16 | NBR | 55,00 | 40,00 | 11,00 | 6,35 | A RICHIESTA |
| 71718 | KNA 16 | NBR | 65,00 | 45,00 | 14,00 | 6,35 | A RICHIESTA |
| 74049 | KNA 16 | NBR | 65,00 | 50,00 | 10,50 | 6,35 | A RICHIESTA |
| 173497 | KNA 16 | NBR | 75,00 | 55,00 | 14,50 | 6,35 | A RICHIESTA |
| 65079 | KNA 16 | NBR | 80,00 | 60,00 | 14,00 | 6,40 | A RICHIESTA |
| 44922 | KNA 16 | NBR | 90,00 | 70,00 | 14,50 | 6,35 | A RICHIESTA |
| 84325 | KNA 16 | NBR | 95,00 | 75,00 | 14,50 | 6,35 | A RICHIESTA |
| 37533 | KNA 16 | NBR | 100,00 | 80,00 | 14,00 | 6,35 | A RICHIESTA |
| 37534 | KNA 16 | NBR | 110,00 | 90,00 | 12,50 | 6,35 | A RICHIESTA |
| 64544 | KNA 16 | NBR | 125,00 | 105,00 | 12,50 | 6,35 | A RICHIESTA |

# Guarnizione pistone

PTFE + MOLLA V INOX

KNA 44

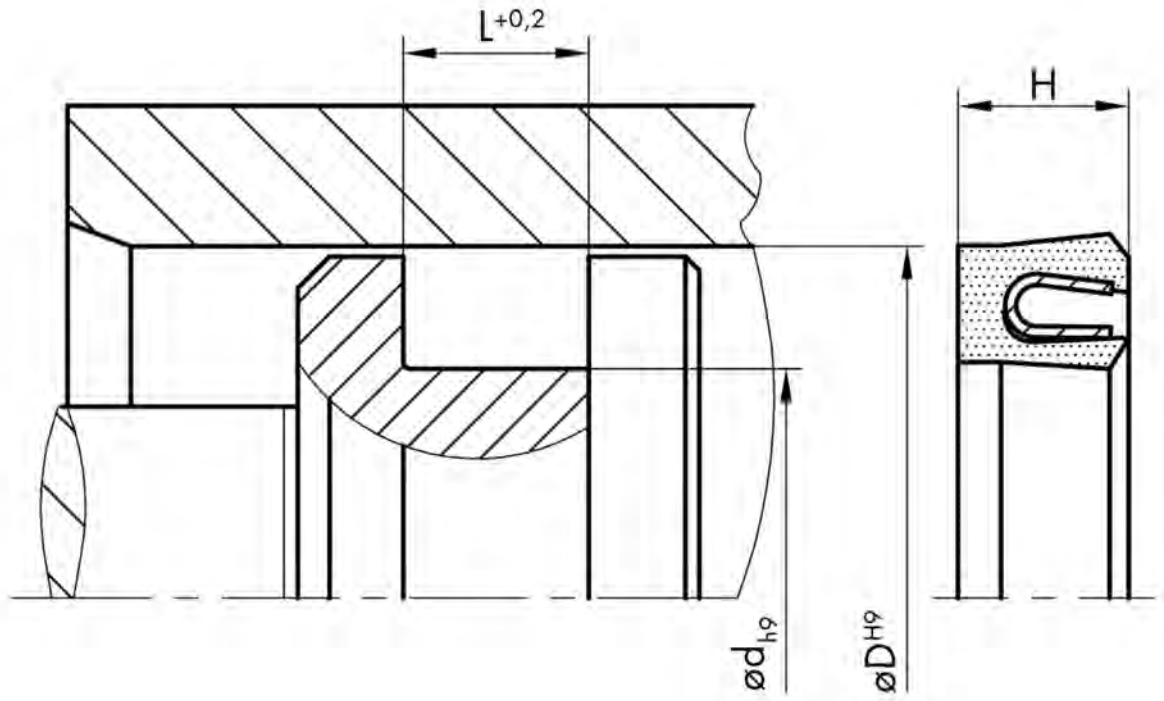
L+0,2
H
ød h9
øD H9

PTFE + MOLLA V INOX

# GUARNIZIONE PISTONE - KNA 44

| CODICE | TIPO | MAT. | D mm | d mm | L mm | LISTINO 5-2016 X 1 PCS € |
|---|---|---|---|---|---|---|
| 108753 | KNA 44 | PTFE | 8 | 5,1 | 2,4 | 38,81 |
| 108754 | KNA 44 | PTFE | 10 | 7,1 | 2,4 | 26,53 |
| 110546 | KNA 44 | PTFE | 12 | 9,1 | 2,4 | 26,53 |
| 110547 | KNA 44 | PTFE | 14 | 9,5 | 3,6 | 27,09 |
| 110549 | KNA 44 | PTFE | 16 | 11,5 | 3,6 | 27,09 |
| 110550 | KNA 44 | PTFE | 17 | 12,5 | 3,6 | 27,09 |
| 110551 | KNA 44 | PTFE | 18 | 13,5 | 3,6 | 27,09 |
| 110552 | KNA 44 | PTFE | 20 | 15,5 | 3,6 | 27,09 |
| 110553 | KNA 44 | PTFE | 22 | 17,5 | 3,6 | 27,09 |
| 110554 | KNA 44 | PTFE | 25 | 18,8 | 4,8 | 40,68 |
| 110556 | KNA 44 | PTFE | 28 | 21,8 | 4,8 | 40,68 |
| 110558 | KNA 44 | PTFE | 32 | 25,8 | 4,8 | 40,68 |
| 110559 | KNA 44 | PTFE | 35 | 28,8 | 4,8 | 40,68 |
| 126817 | KNA 44 | PTFE | 38,1 | 33,5 | 3,5 | 40,68 |
| 110560 | KNA 44 | PTFE | 40 | 33,8 | 4,8 | 40,68 |
| 110563 | KNA 44 | PTFE | 45 | 38,8 | 4,8 | 55,02 |
| 130500 | KNA 44 | PTFE | 46 | 39,8 | 4,8 | 55,02 |
| 110564 | KNA 44 | PTFE | 48 | 38,6 | 7,1 | 55,02 |
| 110565 | KNA 44 | PTFE | 50 | 40,6 | 7,1 | 55,02 |
| 110566 | KNA 44 | PTFE | 52 | 42,6 | 7,1 | 55,02 |
| 110568 | KNA 44 | PTFE | 55 | 45,6 | 7,1 | 55,02 |
| 110570 | KNA 44 | PTFE | 60 | 50,6 | 7,1 | 55,02 |
| 89959 | KNA 44 | PTFE | 63 | 53,6 | 7,1 | 55,02 |
| 110571 | KNA 44 | PTFE | 65 | 55,6 | 7,1 | 55,02 |
| 110572 | KNA 44 | PTFE | 68 | 58,6 | 7,1 | 67,58 |
| 110573 | KNA 44 | PTFE | 70 | 60,6 | 7,1 | 67,58 |
| 47585 | KNA 44 | PTFE | 73 | 63,6 | 7,1 | 67,58 |
| 110574 | KNA 44 | PTFE | 75 | 65,6 | 7,1 | 67,58 |
| 110576 | KNA 44 | PTFE | 80 | 70,6 | 7,1 | 67,58 |
| 110577 | KNA 44 | PTFE | 85 | 75,6 | 7,1 | 78,46 |
| 110578 | KNA 44 | PTFE | 90 | 80,6 | 7,1 | 81,37 |
| 110580 | KNA 44 | PTFE | 100 | 90,6 | 7,1 | 93,83 |
| 144399 | KNA 44 | PTFE | 105 | 98,8 | 4,8 | 89,52 |
| 110582 | KNA 44 | PTFE | 110 | 100,6 | 7,1 | 118,39 |
| 110585 | KNA 44 | PTFE | 125 | 112,8 | 9,5 | 127,86 |
| 110586 | KNA 44 | PTFE | 130 | 117,8 | 9,5 | 170,89 |
| 110589 | KNA 44 | PTFE | 145 | 132,8 | 9,5 | 196,85 |
| 110590 | KNA 44 | PTFE | 150 | 137,8 | 9,5 | 196,85 |
| 110591 | KNA 44 | PTFE | 160 | 147,8 | 9,5 | 253,47 |
| 110592 | KNA 44 | PTFE | 170 | 157,8 | 9,5 | 247,47 |
| 110594 | KNA 44 | PTFE | 185 | 172,8 | 9,5 | 282,25 |
| 110596 | KNA 44 | PTFE | 190 | 177,8 | 9,5 | 295,37 |
| 90377 | KNA 44 | PTFE | 200 | 187,8 | 9,5 | 321,43 |

# Guarnizione pistone

PTFE BRONZO/OR NBR

KPOR 130

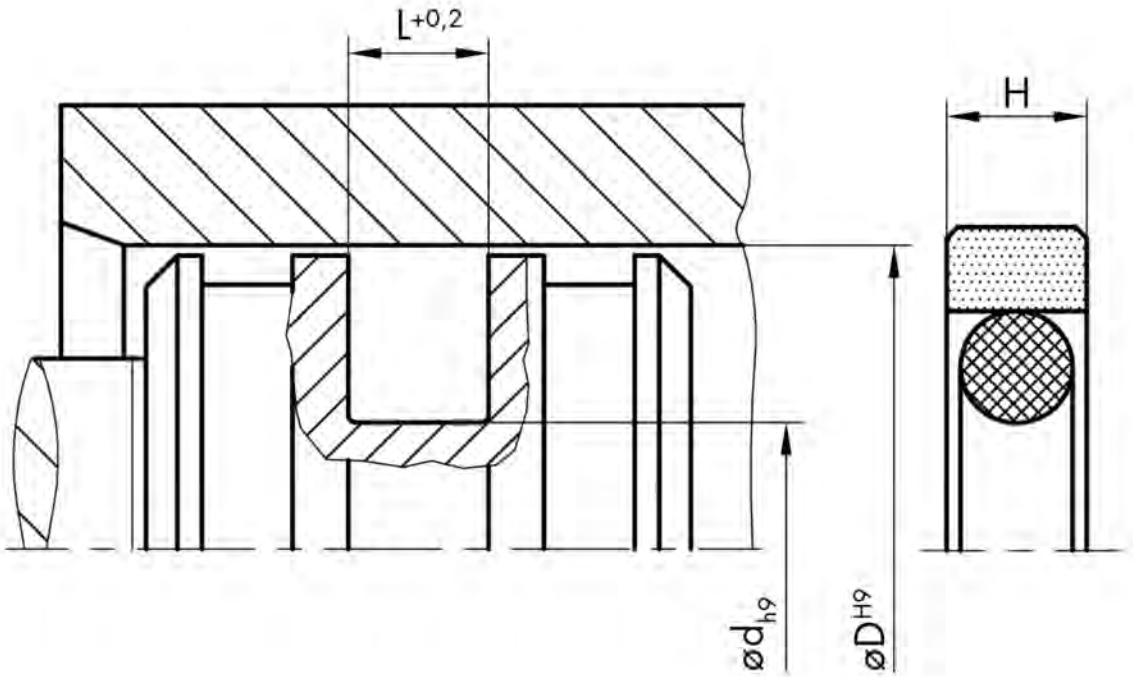
L+0,2
H
ød h9
øD H9

# GUARNIZIONE PISTONE - KPOR 130

| CODICE | TIPO | MAT. | D mm | d mm | L mm | LISTINO 5-2016 X 1 PCS € |
|---|---|---|---|---|---|---|
| 191469 | KPOR 130 | PTFE | 10 | 5,1 | 2,2 | 1,80 |
| 191470 | KPOR 130 | PTFE | 12 | 7,1 | 2,2 | 2,00 |
| 191544 | KPOR 130 | PTFE | 14 | 9,1 | 2,2 | 2,70 |
| 191471 | KPOR 130 | PTFE | 15 | 7,5 | 3,2 | 2,80 |
| 191472 | KPOR 130 | PTFE | 16 | 8,5 | 3,2 | 3,00 |
| 191552 | KPOR 130 | PTFE | 16 | 11,1 | 2,2 | 2,70 |
| 191473 | KPOR 130 | PTFE | 18 | 10,5 | 3,2 | 3,00 |
| 191464 | KPOR 130 | PTFE | 20 | 12,5 | 3,2 | 3,00 |
| 191561 | KPOR 130 | PTFE | 20 | 15,1 | 2,2 | 2,70 |
| 191474 | KPOR 130 | PTFE | 22 | 14,5 | 3,2 | 3,00 |
| 191475 | KPOR 130 | PTFE | 24 | 16,5 | 3,2 | 3,00 |
| 191455 | KPOR 130 | PTFE | 25 | 17,5 | 3,2 | 3,00 |
| 191476 | KPOR 130 | PTFE | 28 | 20,5 | 3,2 | 3,10 |
| 190014 | KPOR 130 | PTFE | 30 | 22,5 | 3,2 | 3,90 |
| 191568 | KPOR 130 | PTFE | 32 | 21 | 4,2 | 4,10 |
| 191477 | KPOR 130 | PTFE | 32 | 24,5 | 3,2 | 3,90 |
| 191478 | KPOR 130 | PTFE | 35 | 27,5 | 3,2 | 4,20 |
| 191479 | KPOR 130 | PTFE | 36 | 28,5 | 3,2 | 4,20 |
| 191480 | KPOR 130 | PTFE | 38 | 30,5 | 3,2 | 4,20 |
| 191481 | KPOR 130 | PTFE | 40 | 29 | 4,2 | 4,70 |
| 191451 | KPOR 130 | PTFE | 40 | 32,5 | 3,2 | 4,40 |
| 191450 | KPOR 130 | PTFE | 42 | 31 | 4,2 | 5,50 |
| 191459 | KPOR 130 | PTFE | 45 | 34 | 4,2 | 5,50 |
| 191483 | KPOR 130 | PTFE | 48 | 37 | 4,2 | 8,00 |
| 191559 | KPOR 130 | PTFE | 50 | 34,5 | 6,3 | 8,70 |
| 191465 | KPOR 130 | PTFE | 50 | 39 | 4,2 | 8,20 |
| 191558 | KPOR 130 | PTFE | 55 | 39,5 | 6,3 | 10,70 |
| 191485 | KPOR 130 | PTFE | 55 | 44 | 4,2 | 7,30 |
| 191543 | KPOR 130 | PTFE | 56 | 45 | 4,2 | 7,30 |
| 191572 | KPOR 130 | PTFE | 58 | 47 | 4,2 | 8,80 |
| 191549 | KPOR 130 | PTFE | 60 | 44,5 | 6,3 | 12,80 |
| 191486 | KPOR 130 | PTFE | 60 | 49 | 4,2 | 8,50 |
| 191546 | KPOR 130 | PTFE | 62 | 51 | 4,2 | 8,50 |
| 191560 | KPOR 130 | PTFE | 63 | 47,5 | 6,3 | 9,40 |
| 191487 | KPOR 130 | PTFE | 63 | 52 | 4,2 | 9,10 |
| 191488 | KPOR 130 | PTFE | 65 | 54 | 4,2 | 9,10 |
| 191447 | KPOR 130 | PTFE | 70 | 54,5 | 6,3 | 10,40 |
| 191453 | KPOR 130 | PTFE | 70 | 59 | 4,2 | 11,10 |
| 191491 | KPOR 130 | PTFE | 75 | 59,5 | 6,3 | 10,40 |
| 191490 | KPOR 130 | PTFE | 75 | 64 | 4,2 | 11,00 |
| 191492 | KPOR 130 | PTFE | 80 | 59 | 8,1 | 18,50 |
| 191458 | KPOR 130 | PTFE | 80 | 64,5 | 6,3 | 13,30 |
| 191545 | KPOR 130 | PTFE | 80 | 69 | 4,2 | 11,70 |
| 191495 | KPOR 130 | PTFE | 85 | 64 | 8,1 | 23,80 |
| 191494 | KPOR 130 | PTFE | 85 | 69,5 | 6,3 | 15,90 |
| 191497 | KPOR 130 | PTFE | 90 | 69 | 8,1 | 23,80 |
| 191496 | KPOR 130 | PTFE | 90 | 74,5 | 6,3 | 18,60 |
| 191463 | KPOR 130 | PTFE | 100 | 79 | 8,1 | 27,00 |
| 191563 | KPOR 130 | PTFE | 100 | 89 | 4,2 | 13,90 |

# GUARNIZIONE PISTONE - KPOR 130

PTFE BRONZO/OR NBR

| CODICE | TIPO | MAT. | D mm | d mm | L mm | LISTINO 5-2016 X 1 PCS € |
|---|---|---|---|---|---|---|
| 191500 | KPOR 130 | PTFE | 105 | 89,5 | 6,3 | 20,90 |
| 191503 | KPOR 130 | PTFE | 110 | 89 | 8,1 | 29,60 |
| 191502 | KPOR 130 | PTFE | 110 | 94,5 | 6,3 | 21,00 |
| 191505 | KPOR 130 | PTFE | 115 | 94 | 8,1 | 31,50 |
| 191504 | KPOR 130 | PTFE | 115 | 99,5 | 6,3 | 25,50 |
| 191507 | KPOR 130 | PTFE | 120 | 99 | 8,1 | 36,00 |
| 191506 | KPOR 130 | PTFE | 120 | 104,5 | 6,3 | 22,40 |
| 191509 | KPOR 130 | PTFE | 125 | 104 | 8,1 | 40,00 |
| 191508 | KPOR 130 | PTFE | 125 | 109,5 | 6,3 | 22,40 |
| 191512 | KPOR 130 | PTFE | 130 | 109 | 8,1 | 40,00 |
| 191511 | KPOR 130 | PTFE | 130 | 114,5 | 6,3 | 27,30 |
| 191460 | KPOR 130 | PTFE | 140 | 119 | 8,1 | 42,00 |
| 191513 | KPOR 130 | PTFE | 145 | 124 | 8,1 | 59,10 |
| 191514 | KPOR 130 | PTFE | 150 | 129 | 8,1 | 43,30 |
| 191466 | KPOR 130 | PTFE | 160 | 139 | 8,1 | 54,30 |
| 191448 | KPOR 130 | PTFE | 160 | 144,5 | 6,3 | 44,00 |
| 191461 | KPOR 130 | PTFE | 170 | 149 | 8,1 | 54,60 |
| 191462 | KPOR 130 | PTFE | 180 | 159 | 8,1 | 59,90 |
| 191518 | KPOR 130 | PTFE | 190 | 169 | 8,1 | 99,20 |
| 191519 | KPOR 130 | PTFE | 200 | 179 | 8,1 | 104,60 |
| 191521 | KPOR 130 | PTFE | 220 | 199 | 8,1 | 108,70 |
| 191522 | KPOR 130 | PTFE | 230 | 209 | 8,1 | 118,20 |
| 191523 | KPOR 130 | PTFE | 240 | 219 | 8,1 | 124,30 |
| 191524 | KPOR 130 | PTFE | 250 | 229 | 8,1 | 136,20 |
| 191525 | KPOR 130 | PTFE | 260 | 239 | 8,1 | 144,60 |
| 191526 | KPOR 130 | PTFE | 280 | 259 | 8,1 | 152,20 |
| 191527 | KPOR 130 | PTFE | 300 | 279 | 8,1 | 163,40 |
| 191467 | KPOR 130 | PTFE | 320 | 299 | 8,1 | 175,50 |
| 191531 | KPOR 130 | PTFE | 360 | 335,5 | 8,1 | 213,20 |
| 191533 | KPOR 130 | PTFE | 400 | 375,5 | 8,1 | 320,30 |
| 191538 | KPOR 130 | PTFE | 500 | 475,5 | 8,1 | 373,50 |

# Guarnizione pistone

PTFE BRONZO/OR NBR

KPOR 131

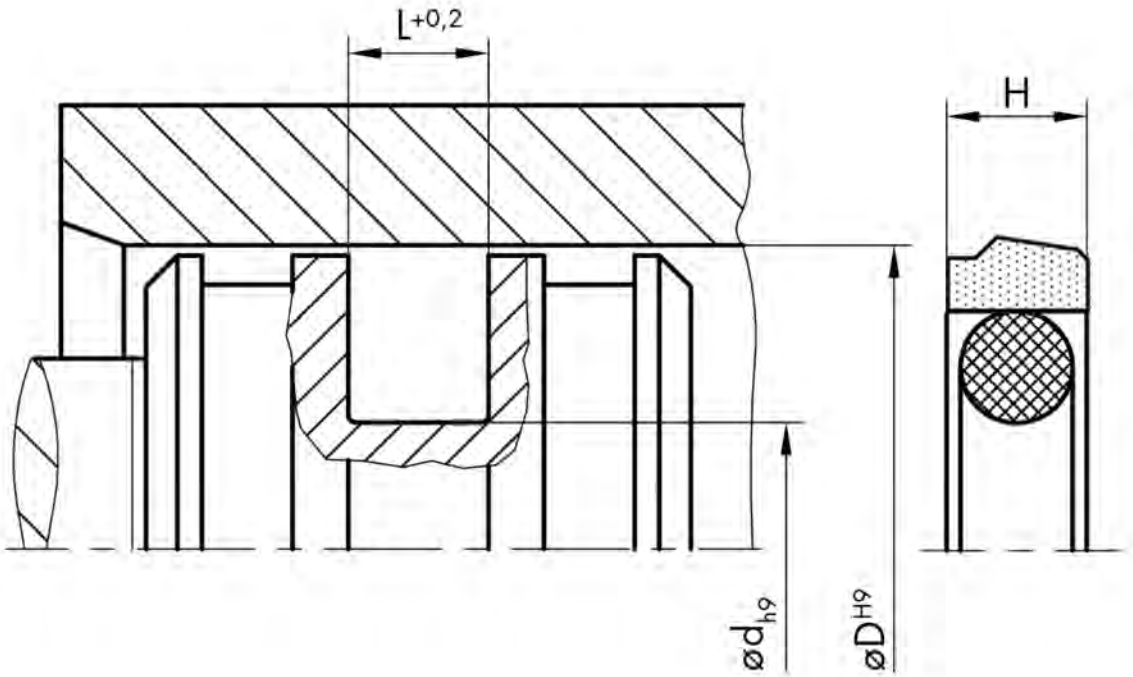
L+0,2
H
ød h9
øD H9

# GUARNIZIONE PISTONE - KPOR 131

| CODICE | TIPO | MAT. | D mm | d mm | L mm | LISTINO 5-2016 X 1 PCS € |
|---|---|---|---|---|---|---|
| 190015 | KPOR 131 | PTFE | 12 | 7,1 | 2,2 | 1,6 |
| 191417 | KPOR 131 | PTFE | 15 | 10,1 | 2,2 | 2 |
| 191418 | KPOR 131 | PTFE | 18 | 10,7 | 3,2 | 2,6 |
| 191419 | KPOR 131 | PTFE | 25 | 17,7 | 3,2 | 3,1 |
| 191420 | KPOR 131 | PTFE | 32 | 21,3 | 4,2 | 4,2 |
| 191416 | KPOR 131 | PTFE | 35 | 24,3 | 4,2 | 5,7 |
| 191422 | KPOR 131 | PTFE | 40 | 29,3 | 4,2 | 6,1 |
| 191425 | KPOR 131 | PTFE | 50 | 39,3 | 4,2 | 7,9 |
| 191445 | KPOR 131 | PTFE | 63 | 52,3 | 4,2 | 9,2 |
| 191426 | KPOR 131 | PTFE | 70 | 54,9 | 6,3 | 12,7 |
| 191427 | KPOR 131 | PTFE | 80 | 64,9 | 6,3 | 15,9 |
| 191428 | KPOR 131 | PTFE | 95 | 79,9 | 6,3 | 18,2 |
| 191429 | KPOR 131 | PTFE | 100 | 84,9 | 6,3 | 22,4 |
| 191430 | KPOR 131 | PTFE | 110 | 94,9 | 6,3 | 24,4 |
| 191434 | KPOR 131 | PTFE | 150 | 134,9 | 6,3 | 36,2 |
| 191435 | KPOR 131 | PTFE | 160 | 144,9 | 6,3 | 62,6 |
| 191436 | KPOR 131 | PTFE | 165 | 149,9 | 6,3 | 70,2 |
| 191438 | KPOR 131 | PTFE | 200 | 179,5 | 8,1 | 112,4 |
| 191439 | KPOR 131 | PTFE | 280 | 256 | 8,1 | 190,3 |

# Guarnizione pistone

TPU

KNA 28

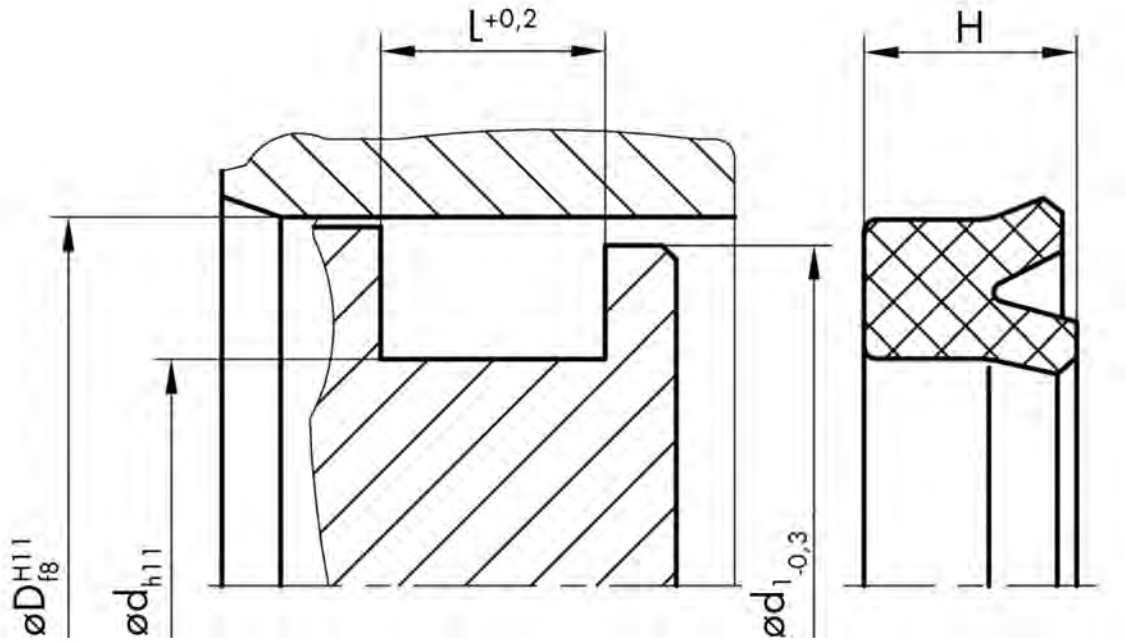
L+0,2
H
øD H11 f8
ød h11
ød1 -0,3

# GUARNIZIONE PISTONE - KNA 28

| CODICE | TIPO | MAT. | D mm | d mm | L mm | H mm | LISTINO 5-2016 X 100 PCS € |
|---|---|---|---|---|---|---|---|
| 22418 | KNA 28 | TPU | 12 | 5 | 6 | 5,5 | 139,07 |
| 15804 | KNA 28 | TPU | 16 | 10 | 9 | 8 | 163,62 |
| 73750 | KNA 28 | TPU | 20 | 12 | 6 | 5,5 | 198,39 |
| 168599 | KNA 28 | TPU | 20 | 14 | 6 | 5,5 | 198,39 |
| 168600 | KNA 28 | TPU | 25 | 10 | 11 | 10 | 208,61 |
| 65819 | KNA 28 | TPU | 25 | 15 | 8 | 7,3 | 220,88 |
| 15765 | KNA 28 | TPU | 25 | 15 | 9 | 8 | 220,88 |
| 73751 | KNA 28 | TPU | 25 | 17 | 6,3 | 5,5 | 220,88 |
| 159022 | KNA 28 | TPU | 28,57 | 19,05 | 8,72 | 7,93 | 220,88 |
| 15796 | KNA 28 | TPU | 30 | 20 | 9 | 8 | 255,65 |
| 22670 | KNA 28 | TPU | 30 | 22 | 7 | 6,5 | 255,65 |
| 124352 | KNA 28 | TPU | 32 | 22 | 8 | 7,3 | 255,65 |
| 168602 | KNA 28 | TPU | 32 | 22 | 9 | 8 | 255,65 |
| 15767 | KNA 28 | TPU | 32 | 22 | 11 | 10 | 255,65 |
| 73753 | KNA 28 | TPU | 32 | 24 | 6,3 | 5,5 | 255,65 |
| 65849 | KNA 28 | TPU | 32 | 24 | 6,7 | 5,7 | 255,65 |
| 168603 | KNA 28 | TPU | 32 | 26 | 6 | 5 | 255,65 |
| 168605 | KNA 28 | TPU | 34 | 22 | 9,4 | 8,7 | 255,65 |
| 168607 | KNA 28 | TPU | 34 | 22 | 10 | 9 | 280,19 |
| 168608 | KNA 28 | TPU | 35 | 20 | 11 | 10 | 280,19 |
| 124356 | KNA 28 | TPU | 35 | 25 | 8,3 | 7,3 | 280,19 |
| 168609 | KNA 28 | TPU | 35 | 25 | 9 | 8 | 280,19 |
| 168610 | KNA 28 | TPU | 35 | 27 | 11 | 10 | 280,19 |
| 168611 | KNA 28 | TPU | 36,5 | 24 | 7 | 6,5 | 280,19 |
| 15809 | KNA 28 | TPU | 37 | 21 | 13 | 12 | 290,42 |
| 168612 | KNA 28 | TPU | 38 | 31 | 5,2 | 4,7 | 290,42 |
| 159023 | KNA 28 | TPU | 38,1 | 28,57 | 7,14 | 6,35 | 290,42 |
| 159024 | KNA 28 | TPU | 38,1 | 31,75 | 7,14 | 6,35 | 290,42 |
| 65861 | KNA 28 | TPU | 40 | 25 | 10 | 9 | 302,69 |
| 15768 | KNA 28 | TPU | 40 | 25 | 11 | 10 | 302,69 |
| 79885 | KNA 28 | TPU | 40 | 28 | 11 | 10 | 302,69 |
| 168613 | KNA 28 | TPU | 40 | 30 | 7,5 | 6,5 | 302,69 |
| 46934 | KNA 28 | TPU | 40 | 30 | 8 | 7 | 302,69 |
| 15769 | KNA 28 | TPU | 40 | 30 | 11 | 10 | 302,69 |
| 65864 | KNA 28 | TPU | 40 | 32 | 6,3 | 5,7 | 302,69 |
| 168615 | KNA 28 | TPU | 40 | 32 | 9 | 8 | 302,69 |
| 15811 | KNA 28 | TPU | 40 | 33 | 9 | 8 | 302,69 |
| 124359 | KNA 28 | TPU | 42 | 22 | 11 | 10 | 302,69 |
| 168626 | KNA 28 | TPU | 42 | 34,5 | 4,7 | 3,7 | 302,69 |
| 65865 | KNA 28 | TPU | 43 | 33 | 8 | 7,3 | 325,19 |
| 168628 | KNA 28 | TPU | 44 | 20 | 12 | 11 | 359,96 |
| 124362 | KNA 28 | TPU | 45 | 25 | 13 | 12 | 359,96 |
| 168629 | KNA 28 | TPU | 45 | 28,5 | 13 | 12 | 359,96 |
| 15813 | KNA 28 | TPU | 45 | 30 | 11 | 10 | 359,96 |
| 15770 | KNA 28 | TPU | 50 | 30 | 13 | 12 | 407,00 |
| 168630 | KNA 28 | TPU | 50 | 32 | 11 | 10 | 407,00 |
| 15771 | KNA 28 | TPU | 50 | 35 | 11 | 10 | 407,00 |
| 73755 | KNA 28 | TPU | 50 | 40 | 8 | 7 | 407,00 |
| 15772 | KNA 28 | TPU | 50 | 40 | 11 | 10 | 407,00 |

# GUARNIZIONE PISTONE - KNA 28



| CODICE | TIPO | MAT. | D mm | d mm | L mm | H mm | LISTINO 5-2016 X 100 PCS € |
|---|---|---|---|---|---|---|---|
| 168635 | KNA 28 | TPU | 50 | 42 | 6 | 5,5 | 407,00 |
| 15866 | KNA 28 | TPU | 50 | 42 | 9 | 8 | 407,00 |
| 168636 | KNA 28 | TPU | 50 | 42 | 11 | 10 | 407,00 |
| 159025 | KNA 28 | TPU | 50,8 | 34,92 | 13,48 | 12,7 | 407,00 |
| 159026 | KNA 28 | TPU | 50,8 | 38,1 | 10,31 | 9,52 | 407,00 |
| 168638 | KNA 28 | TPU | 50,8 | 40,8 | 8 | 7,5 | 407,00 |
| 159027 | KNA 28 | TPU | 50,8 | 41,27 | 5,38 | 4,76 | 407,00 |
| 159028 | KNA 28 | TPU | 50,8 | 41,27 | 8,72 | 7,93 | 407,00 |
| 159029 | KNA 28 | TPU | 50,8 | 41,27 | 10,31 | 9,52 | 407,00 |
| 168639 | KNA 28 | TPU | 52 | 42 | 10,6 | 10 | 407,00 |
| 65881 | KNA 28 | TPU | 54 | 44 | 8 | 7,3 | 407,00 |
| 124200 | KNA 28 | TPU | 55 | 35 | 13 | 12 | 407,00 |
| 168642 | KNA 28 | TPU | 55 | 40 | 11 | 10 | 407,00 |
| 168644 | KNA 28 | TPU | 55 | 45 | 11 | 10 | 407,00 |
| 168645 | KNA 28 | TPU | 55 | 47 | 6,3 | 4,8 | 407,00 |
| 65888 | KNA 28 | TPU | 56 | 45 | 8 | 7 | 407,00 |
| 159030 | KNA 28 | TPU | 57,15 | 44,45 | 10,31 | 9,52 | 407,00 |
| 159031 | KNA 28 | TPU | 57,15 | 47,62 | 10,31 | 9,52 | 407,00 |
| 168646 | KNA 28 | TPU | 60 | 40 | 14,5 | 13,5 | 419,27 |
| 15798 | KNA 28 | TPU | 60 | 45 | 11 | 10 | 419,27 |
| 15817 | KNA 28 | TPU | 60 | 50 | 8 | 7 | 419,27 |
| 65893 | KNA 28 | TPU | 60 | 50 | 9 | 8 | 419,27 |
| 15799 | KNA 28 | TPU | 60 | 50 | 11 | 10 | 419,27 |
| 168648 | KNA 28 | TPU | 60 | 52 | 9 | 8 | 419,27 |
| 15775 | KNA 28 | TPU | 63 | 43 | 13 | 12 | 431,54 |
| 168649 | KNA 28 | TPU | 63 | 45 | 11 | 10 | 431,54 |
| 124201 | KNA 28 | TPU | 63 | 45 | 13 | 12 | 431,54 |
| 65897 | KNA 28 | TPU | 63 | 48 | 9,5 | 9 | 431,54 |
| 0 | KNA 28 | TPU | 63 | 48 | 12,5 | 11,5 | 0,00 |
| 15776 | KNA 28 | TPU | 63 | 48 | 13 | 12 | 431,54 |
| 15819 | KNA 28 | TPU | 63 | 53 | 8 | 7 | 431,54 |
| 15777 | KNA 28 | TPU | 63 | 53 | 13 | 12 | 431,54 |
| 65899 | KNA 28 | TPU | 63 | 55 | 6,3 | 5,7 | 454,04 |
| 159032 | KNA 28 | TPU | 63,5 | 41,27 | 13,48 | 12,7 | 454,04 |
| 159033 | KNA 28 | TPU | 63,5 | 47,62 | 13,48 | 12,7 | 454,04 |
| 159034 | KNA 28 | TPU | 63,5 | 50,8 | 7,14 | 6,35 | 454,04 |
| 159035 | KNA 28 | TPU | 63,5 | 50,8 | 10,31 | 9,52 | 454,04 |
| 159036 | KNA 28 | TPU | 63,5 | 53,97 | 7,14 | 6,35 | 454,04 |
| 159037 | KNA 28 | TPU | 63,5 | 53,97 | 8,72 | 7,93 | 454,04 |
| 159038 | KNA 28 | TPU | 63,5 | 53,97 | 10,31 | 9,52 | 454,04 |
| 168653 | KNA 28 | TPU | 65 | 45 | 13 | 12 | 454,04 |
| 15803 | KNA 28 | TPU | 65 | 50 | 11 | 10 | 454,04 |
| 168654 | KNA 28 | TPU | 65 | 50 | 12,5 | 11,5 | 454,04 |
| 65901 | KNA 28 | TPU | 65 | 55 | 8 | 7,3 | 454,04 |
| 168655 | KNA 28 | TPU | 65 | 55 | 11 | 10 | 454,04 |
| 65904 | KNA 28 | TPU | 67 | 57 | 8 | 7,3 | 476,54 |
| 168657 | KNA 28 | TPU | 68 | 48 | 11 | 10 | 476,53 |
| 168659 | KNA 28 | TPU | 70 | 50 | 14,5 | 13,5 | 476,53 |
| 168660 | KNA 28 | TPU | 70 | 50 | 16 | 15 | 476,53 |

# GUARNIZIONE PISTONE - KNA 28

| CODICE | TIPO | MAT. | D mm | d mm | L mm | H mm | LISTINO 5-2016 X 100 PCS € |
|---|---|---|---|---|---|---|---|
| 15801 | KNA 28 | TPU | 70 | 55 | 13 | 12 | 476,54 |
| 65908 | KNA 28 | TPU | 70 | 60 | 7 | 6 | 476,54 |
| 15778 | KNA 28 | TPU | 70 | 60 | 13 | 12 | 476,54 |
| 168663 | KNA 28 | TPU | 70 | 60 | 14,5 | 13,5 | 488,80 |
| 168664 | KNA 28 | TPU | 70 | 62 | 8,5 | 7,5 | 488,80 |
| 168666 | KNA 28 | TPU | 72 | 58 | 13 | 12 | 488,80 |
| 168667 | KNA 28 | TPU | 75 | 50 | 15 | 14 | 513,35 |
| 65919 | KNA 28 | TPU | 75 | 55 | 13 | 12 | 513,34 |
| 168668 | KNA 28 | TPU | 75 | 55 | 14,5 | 13,5 | 513,35 |
| 124202 | KNA 28 | TPU | 75 | 60 | 13 | 12 | 513,34 |
| 168672 | KNA 28 | TPU | 75 | 65 | 14,5 | 13,5 | 488,80 |
| 159040 | KNA 28 | TPU | 76,2 | 63,5 | 7,14 | 6,35 | 513,34 |
| 159041 | KNA 28 | TPU | 76,2 | 63,5 | 10,31 | 9,52 | 513,34 |
| 159042 | KNA 28 | TPU | 76,2 | 66,67 | 10,31 | 9,52 | 513,34 |
| 15779 | KNA 28 | TPU | 80 | 60 | 13 | 12 | 513,35 |
| 65926 | KNA 28 | TPU | 80 | 60 | 16 | 14,5 | 513,34 |
| 65929 | KNA 28 | TPU | 80 | 65 | 12,5 | 11,4 | 513,34 |
| 15780 | KNA 28 | TPU | 80 | 65 | 13 | 12 | 513,35 |
| 65930 | KNA 28 | TPU | 80 | 70 | 7,5 | 6,7 | 513,34 |
| 15829 | KNA 28 | TPU | 80 | 70 | 8 | 7 | 513,34 |
| 15781 | KNA 28 | TPU | 80 | 70 | 13 | 12 | 513,34 |
| 15873 | KNA 28 | TPU | 80 | 72 | 13 | 12 | 513,34 |
| 159044 | KNA 28 | TPU | 82,55 | 69,85 | 7,14 | 6,35 | 513,34 |
| 159045 | KNA 28 | TPU | 82,55 | 69,85 | 10,31 | 9,52 | 513,34 |
| 159046 | KNA 28 | TPU | 82,55 | 73,02 | 7,14 | 6,35 | 513,34 |
| 168675 | KNA 28 | TPU | 85 | 65 | 14,5 | 13,5 | 513,35 |
| 15782 | KNA 28 | TPU | 85 | 70 | 13 | 12 | 513,34 |
| 168676 | KNA 28 | TPU | 85 | 75 | 11 | 10 | 513,35 |
| 159052 | KNA 28 | TPU | 88,9 | 76,2 | 7,14 | 6,35 | 513,34 |
| 159053 | KNA 28 | TPU | 88,9 | 76,2 | 10,31 | 9,52 | 513,34 |
| 15832 | KNA 28 | TPU | 90 | 70 | 13 | 12 | 513,35 |
| 168678 | KNA 28 | TPU | 90 | 70 | 14,5 | 13,5 | 513,35 |
| 65940 | KNA 28 | TPU | 90 | 75 | 12,5 | 11,4 | 513,34 |
| 15875 | KNA 28 | TPU | 90 | 75 | 13 | 12 | 513,35 |
| 168680 | KNA 28 | TPU | 90 | 80 | 11 | 10 | 513,35 |
| 168681 | KNA 28 | TPU | 90 | 80 | 14 | 13 | 513,35 |
| 124205 | KNA 28 | TPU | 95 | 80 | 13 | 12 | 535,84 |
| 22429 | KNA 28 | TPU | 100 | 80 | 11 | 10 | 602,93 |
| 15784 | KNA 28 | TPU | 100 | 80 | 13 | 12 | 602,93 |
| 15840 | KNA 28 | TPU | 100 | 80 | 14,5 | 13,5 | 602,93 |
| 65947 | KNA 28 | TPU | 100 | 80 | 16 | 15 | 602,93 |
| 65949 | KNA 28 | TPU | 100 | 85 | 12,5 | 11,4 | 602,93 |
| 15785 | KNA 28 | TPU | 100 | 85 | 13 | 12 | 602,93 |
| 168688 | KNA 28 | TPU | 100 | 86 | 13 | 12 | 602,93 |
| 168690 | KNA 28 | TPU | 100 | 90 | 8 | 7 | 602,93 |
| 15842 | KNA 28 | TPU | 100 | 90 | 11,5 | 10,5 | 602,93 |
| 168692 | KNA 28 | TPU | 101,6 | 80 | 13 | 12 | 602,93 |
| 159060 | KNA 28 | TPU | 101,6 | 88,9 | 7,14 | 6,35 | 602,93 |
| 15843 | KNA 28 | TPU | 105 | 90 | 13 | 12 | 602,93 |

# GUARNIZIONE PISTONE - KNA 28



| CODICE | TIPO | MAT. | D mm | d mm | L mm | H mm | LISTINO 5-2016 X 100 PCS € |
|---|---|---|---|---|---|---|---|
| 15844 | KNA 28 | TPU | 110 | 90 | 13 | 12 | 665,92 |
| 65952 | KNA 28 | TPU | 110 | 90 | 16 | 15 | 665,92 |
| 65954 | KNA 28 | TPU | 110 | 95 | 11 | 10 | 665,92 |
| 15845 | KNA 28 | TPU | 110 | 95 | 13 | 12 | 665,92 |
| 168694 | KNA 28 | TPU | 110 | 100 | 8 | 7 | 665,92 |
| 168695 | KNA 28 | TPU | 110 | 100 | 14,5 | 13,5 | 665,92 |
| 65960 | KNA 28 | TPU | 115 | 95 | 16 | 15 | 679,42 |
| 168696 | KNA 28 | TPU | 115 | 100 | 11,5 | 10,5 | 679,42 |
| 168697 | KNA 28 | TPU | 115 | 105 | 14,5 | 13,5 | 679,42 |
| 15848 | KNA 28 | TPU | 120 | 100 | 13 | 12 | 780,66 |
| 82820 | KNA 28 | TPU | 120 | 105 | 13 | 12 | 780,66 |
| 15787 | KNA 28 | TPU | 125 | 95 | 19 | 18 | 780,66 |
| 124212 | KNA 28 | TPU | 125 | 100 | 16 | 15 | 780,66 |
| 15850 | KNA 28 | TPU | 125 | 105 | 13 | 12 | 780,66 |
| 15788 | KNA 28 | TPU | 125 | 105 | 16 | 15 | 780,66 |
| 65967 | KNA 28 | TPU | 125 | 110 | 10,6 | 9,6 | 780,66 |
| 168701 | KNA 28 | TPU | 125 | 110 | 11 | 10 | 780,66 |
| 15852 | KNA 28 | TPU | 125 | 115 | 16 | 15 | 794,15 |
| 159068 | KNA 28 | TPU | 127 | 107,95 | 13,48 | 12,7 | 845,90 |
| 15853 | KNA 28 | TPU | 130 | 110 | 13 | 12 | 845,90 |
| 22676 | KNA 28 | TPU | 130 | 110 | 16 | 15 | 845,90 |
| 168702 | KNA 28 | TPU | 130 | 120 | 14,5 | 13,5 | 845,90 |
| 15855 | KNA 28 | TPU | 140 | 120 | 13 | 12 | 985,38 |
| 65974 | KNA 28 | TPU | 140 | 120 | 16 | 15 | 985,38 |
| 168705 | KNA 28 | TPU | 140 | 125 | 10 | 9 | 985,38 |
| 124214 | KNA 28 | TPU | 140 | 125 | 16 | 15 | 985,38 |
| 73763 | KNA 28 | TPU | 145 | 115 | 18,6 | 18 | 1.203,60 |
| 65978 | KNA 28 | TPU | 150 | 120 | 19 | 18 | 1.203,60 |
| 168706 | KNA 28 | TPU | 150 | 125 | 14,5 | 13,5 | 1.203,60 |
| 15802 | KNA 28 | TPU | 150 | 130 | 16 | 15 | 1.203,60 |
| 168707 | KNA 28 | TPU | 150 | 140 | 8 | 7 | 1.203,60 |
| 159083 | KNA 28 | TPU | 158,75 | 146,05 | 15,72 | 14,28 | 1.203,60 |
| 65988 | KNA 28 | TPU | 160 | 130 | 19 | 18 | 1.241,85 |
| 65989 | KNA 28 | TPU | 160 | 135 | 20 | 18,5 | 1.241,85 |
| 168708 | KNA 28 | TPU | 160 | 140 | 14,5 | 13,5 | 1.241,85 |
| 15789 | KNA 28 | TPU | 160 | 140 | 16 | 15 | 1.241,85 |
| 168710 | KNA 28 | TPU | 160 | 145 | 10 | 9 | 1.241,85 |
| 168712 | KNA 28 | TPU | 170 | 145 | 20 | 19 | 1.408,33 |
| 15878 | KNA 28 | TPU | 170 | 150 | 16 | 15 | 1.408,33 |
| 124215 | KNA 28 | TPU | 180 | 150 | 19 | 18 | 1.691,80 |
| 168715 | KNA 28 | TPU | 180 | 160 | 14,5 | 13,5 | 1.691,80 |
| 66008 | KNA 28 | TPU | 180 | 160 | 16 | 15 | 1.691,80 |
| 168683 | KNA 28 | TPU | 180 | 166 | 16,5 | 15,5 | 1.691,80 |
| 168717 | KNA 28 | TPU | 190 | 170 | 16 | 15 | 1.831,28 |
| 168718 | KNA 28 | TPU | 200 | 170 | 19 | 18 | 2.699,67 |
| 35466 | KNA 28 | TPU | 200 | 180 | 16 | 15 | 2.699,67 |
| 66032 | KNA 28 | TPU | 220 | 190 | 19 | 18 | 3.069,75 |
| 15790 | KNA 28 | TPU | 220 | 200 | 16 | 15 | 3.069,75 |
| 15791 | KNA 28 | TPU | 250 | 220 | 19 | 18 | 4.993,27 |
| 177646 | KNA 28 | TPU | 250 | 230 | 16 | 15 | 4.993,27 |

# Guarnizione stelo

NBR 90 TELA IMPREGNATA/NBR 90

SDS 01 3/2

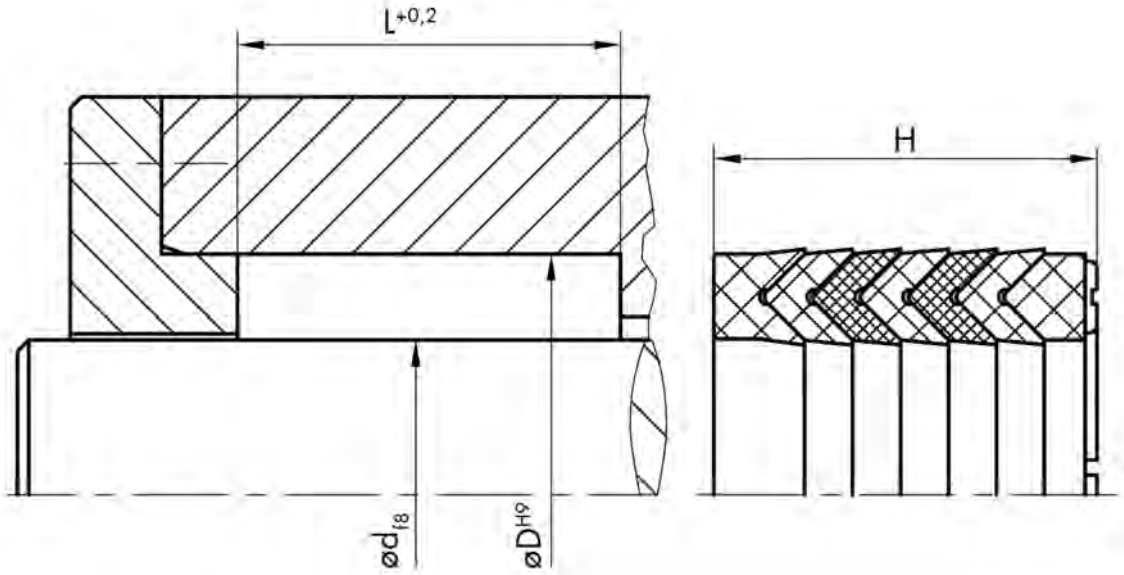
L+0,2
H
ød f8
øD H9

NBR 90 TELA IMPREGNATA/
NBR 90

# GUARNIZIONE STELO - SDS 01 3/2

| CODICE | TIPO | d mm | D mm | L mm | LISTINO 5-2016 X 100 PCS € |
|---|---|---|---|---|---|
| 171411 | SDS 01 3/2 | 8 | 18 | 18,5 | 1.809,53 |
| 171412 | SDS 01 3/2 | 10 | 20 | 18,5 | 1.809,53 |
| 188442 | SDS 01 3/2 | 12 | 22 | 18,5 | 1.809,53 |
| 190577 | SDS 01 3/2 | 14 | 24 | 18,5 | 1.809,53 |
| 70562 | SDS 01 3/2 | 15 | 25 | 18,5 | 1.809,53 |
| 188129 | SDS 01 3/2 | 18 | 28 | 18,5 | 1.809,53 |
| 188441 | SDS 01 3/2 | 20 | 30 | 18,5 | 1.809,53 |
| 192725 | SDS 01 3/2 | 20 | 32 | 22,5 | 1.923,29 |
| 188443 | SDS 01 3/2 | 22 | 32 | 18,5 | 1.923,29 |
| 188128 | SDS 01 3/2 | 22 | 34 | 22,5 | 1.923,29 |
| 188032 | SDS 01 3/2 | 25 | 37 | 22,5 | 2.037,05 |
| 188439 | SDS 01 3/2 | 25 | 40 | 22,5 | 2.037,05 |
| 189850 | SDS 01 3/2 | 28 | 40 | 22,5 | 2.037,05 |
| 70568 | SDS 01 3/2 | 28 | 43 | 22,5 | 2.037,05 |
| 188211 | SDS 01 3/2 | 30 | 42 | 22,5 | 2.037,05 |
| 188592 | SDS 01 3/2 | 30 | 45 | 22,5 | 2.037,05 |
| 188130 | SDS 01 3/2 | 32 | 44 | 22,5 | 2.037,05 |
| 189770 | SDS 01 3/2 | 32 | 47 | 22,5 | 2.037,05 |
| 188212 | SDS 01 3/2 | 35 | 47 | 22,5 | 2.037,05 |
| 189759 | SDS 01 3/2 | 35 | 50 | 22,5 | 2.037,05 |
| 188138 | SDS 01 3/2 | 36 | 48 | 22,5 | 2.037,05 |
| 192726 | SDS 01 3/2 | 36 | 51 | 22,5 | 2.150,80 |
| 189757 | SDS 01 3/2 | 40 | 52 | 22,5 | 2.150,80 |
| 188440 | SDS 01 3/2 | 40 | 55 | 22,5 | 2.262,46 |
| 188259 | SDS 01 3/2 | 42 | 54 | 22,5 | 2.262,46 |
| 77183 | SDS 01 3/2 | 42 | 57 | 22,5 | 2.262,46 |
| 189205 | SDS 01 3/2 | 45 | 60 | 22,5 | 2.489,96 |
| 192827 | SDS 01 3/2 | 45 | 65 | 22,5 | 2.715,37 |
| 188685 | SDS 01 3/2 | 50 | 65 | 22,5 | 2.715,37 |
| 188283 | SDS 01 3/2 | 50 | 70 | 30 | 3.168,27 |
| 192831 | SDS 01 3/2 | 55 | 70 | 22,5 | 3.168,27 |
| 188284 | SDS 01 3/2 | 55 | 75 | 30 | 3.168,27 |
| 188213 | SDS 01 3/2 | 56 | 71 | 22,5 | 3.168,27 |
| 188781 | SDS 01 3/2 | 56 | 76 | 37 | 3.168,27 |
| 188565 | SDS 01 3/2 | 60 | 75 | 22,5 | 3.393,67 |
| 188778 | SDS 01 3/2 | 60 | 80 | 37 | 3.732,84 |
| 188139 | SDS 01 3/2 | 63 | 78 | 22,5 | 3.732,84 |
| 189370 | SDS 01 3/2 | 63 | 83 | 37 | 3.846,59 |
| 192741 | SDS 01 3/2 | 65 | 80 | 22,5 | 3.846,59 |
| 188779 | SDS 01 3/2 | 65 | 85 | 40 | 3.960,34 |
| 189287 | SDS 01 3/2 | 70 | 85 | 22,5 | 3.960,34 |
| 188285 | SDS 01 3/2 | 70 | 90 | 40 | 4.074,09 |
| 189852 | SDS 01 3/2 | 75 | 90 | 22,5 | 4.074,09 |
| 196991 | SDS 01 3/2 | 75 | 95 | 40 | 4.299,50 |
| 192723 | SDS 01 3/2 | 80 | 95 | 22,5 | 4.299,50 |
| 189288 | SDS 01 3/2 | 80 | 100 | 40 | 4.524,89 |
| 188444 | SDS 01 3/2 | 85 | 100 | 22,5 | 4.524,89 |
| 188215 | SDS 01 3/2 | 85 | 105 | 40 | 4.645,68 |
| 189853 | SDS 01 3/2 | 90 | 105 | 22,5 | 4.524,89 |

# GUARNIZIONE STELO - SDS 01 3/2

NBR 90 TELA IMPREGNATA/
NBR 90

| CODICE | TIPO | d mm | D mm | L mm | LISTINO 5-2016 X 100 PCS € |
|---|---|---|---|---|---|
| 188780 | SDS 01 3/2 | 90 | 110 | 40 | 4.977,81 |
| 189206 | SDS 01 3/2 | 100 | 115 | 30 | 5.441,93 |
| 189760 | SDS 01 3/2 | 100 | 120 | 40 | 6.386,72 |
| 171416 | SDS 01 3/2 | 105 | 125 | 40 | 6.989,84 |
| 171417 | SDS 01 3/2 | 105 | 130 | 40 | 8.178,56 |
| 188214 | SDS 01 3/2 | 110 | 125 | 30 | 5.441,93 |
| 188163 | SDS 01 3/2 | 110 | 130 | 40 | 6.386,72 |
| 192819 | SDS 01 3/2 | 115 | 130 | 30 | 5.915,42 |
| 188131 | SDS 01 3/2 | 125 | 140 | 34 | 6.624,57 |
| 189761 | SDS 01 3/2 | 125 | 150 | 46 | 7.956,00 |
| 171420 | SDS 01 3/2 | 135 | 160 | 40 | 7.571,56 |
| 189758 | SDS 01 3/2 | 140 | 155 | 34 | 7.571,56 |
| 190557 | SDS 01 3/2 | 140 | 165 | 46 | 8.754,21 |
| 192724 | SDS 01 3/2 | 150 | 170 | 40 | 8.870,93 |
| 188445 | SDS 01 3/2 | 150 | 180 | 60 | 14.193,93 |
| 194653 | SDS 01 3/2 | 160 | 180 | 40 | 9.463,35 |
| 194050 | SDS 01 3/2 | 160 | 190 | 60 | 14.786,36 |
| 188777 | SDS 01 3/2 | 180 | 200 | 40 | 15.376,58 |
| 192727 | SDS 01 3/2 | 180 | 210 | 60 | 16.561,41 |
| 194049 | SDS 01 3/2 | 200 | 220 | 40 | 15.968,99 |
| 188127 | SDS 01 3/2 | 200 | 230 | 60 | 16.173,81 |

# Guarnizione stelo

NBR 80/TELA IMPREGNATA NBR 90/POM

SN 05 - SNI 07

**SN 05**

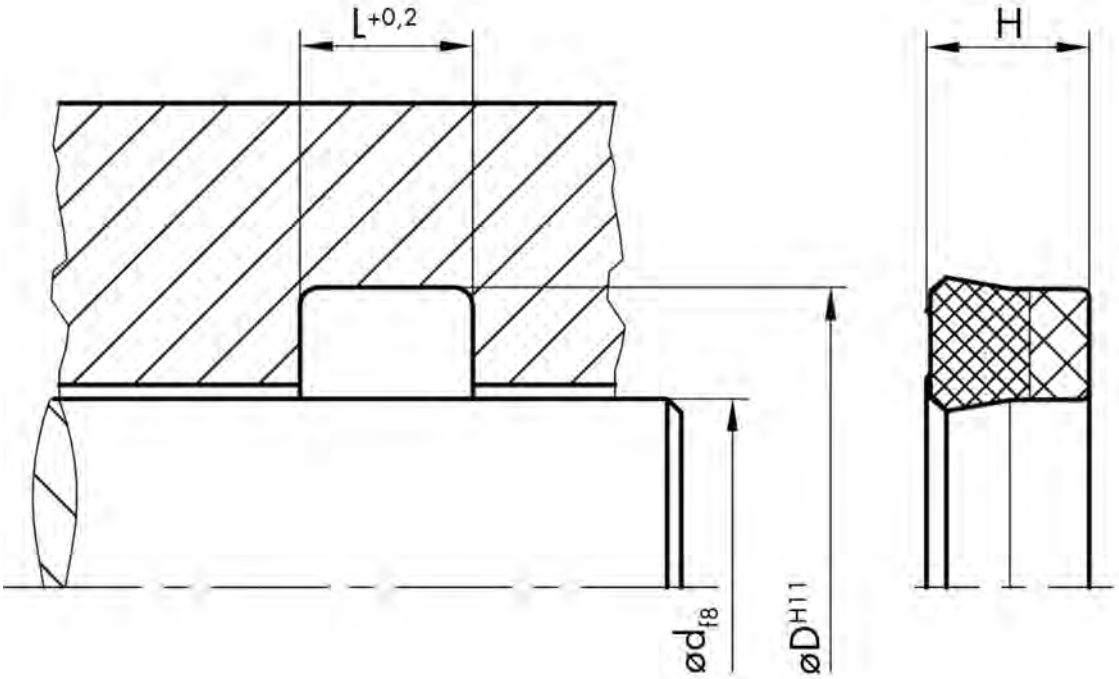


**SNI 07**

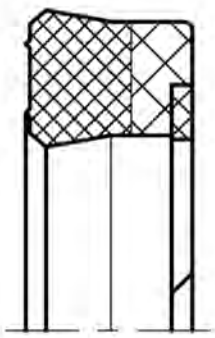

NBR 80/
TELA IMPREGNATA NBR 90/POM

# GUARNIZIONE STELO - SN 05 - SNI 07

| CODICE | TIPO | TIPO | d mm | D mm | L mm | LISTINO 5-2016 X 100 PCS € |
|---|---|---|---|---|---|---|
| 193083 | SN | 05 | 10 | 17 | 6,3 | 392,40 |
| 171541 | SNI | 07 | 12 | 23 | 7,5 | 400,40 |
| 189793 | SN | 05 | 14 | 22 | 6,3 | 388,96 |
| 188819 | SN | 05 | 15 | 23 | 6,3 | 394,07 |
| 171542 | SNI | 07 | 15 | 27 | 7 | 472,44 |
| 171544 | SNI | 07 | 16 | 24 | 7 | 472,44 |
| 171545 | SNI | 07 | 18 | 28 | 6,3 | 488,43 |
| 171546 | SNI | 07 | 18 | 30 | 7,5 | 512,51 |
| 188484 | SN | 05 | 20 | 27 | 6,5 | 388,96 |
| 188216 | SN | 05 | 20 | 28 | 6,3 | 392,40 |
| 171548 | SNI | 07 | 20 | 28 | 6,3 | 496,52 |
| 190553 | SN | 05 | 20 | 28 | 7 | 421,50 |
| 171549 | SNI | 07 | 20 | 28 | 7 | 520,51 |
| 188583 | SNI | 07 | 20 | 30 | 8 | 495,50 |
| 188862 | SNI | 07 | 20 | 30 | 8,5 | 496,52 |
| 190003 | SN | 05 | 22 | 30 | 6,5 | 377,53 |
| 194636 | SNI | 07 | 22 | 30 | 7 | 520,51 |
| 171552 | SNI | 07 | 22 | 32 | 10 | 536,50 |
| 171553 | SNI | 07 | 22 | 34 | 9,5 | 560,48 |
| 171554 | SNI | 07 | 22 | 35 | 10 | 560,48 |
| 188451 | SNI | 07 | 25 | 33 | 6 | 496,52 |
| 188458 | SNI | 07 | 25 | 33 | 6,4 | 496,52 |
| 188463 | SNI | 07 | 25 | 35 | 9 | 544,49 |
| 171443 | SNI | 07 | 25 | 38 | 10 | 560,48 |
| 171444 | SNI | 07 | 25,4 | 38,1 | 10 | 560,48 |
| 194654 | SN | 05 | 28 | 36 | 6,3 | 544,49 |
| 195601 | SNI | 07 | 28 | 38 | 8 | 560,48 |
| 171446 | SNI | 07 | 28 | 40 | 9,5 | 600,64 |
| 171447 | SNI | 07 | 28 | 41 | 10 | 616,54 |
| 171448 | SNI | 07 | 28,57 | 39,68 | 9,25 | 600,64 |
| 188286 | SN | 05 | 30 | 38 | 6 | 448,37 |
| 188450 | SNI | 07 | 30 | 38 | 6,5 | 602,03 |
| 188466 | SN | 05 | 30 | 40 | 7 | 552,39 |
| 188456 | SNI | 07 | 30 | 40 | 7 | 584,55 |
| 188470 | SN | 05 | 30 | 40 | 7,5 | 554,90 |
| 197379 | SNI | 07 | 30 | 40 | 7,5 | 584,56 |
| 188218 | SNI | 07 | 30 | 40 | 10,5 | 616,54 |
| 171451 | SNI | 07 | 30 | 45 | 9 | 720,66 |
| 171452 | SNI | 07 | 30 | 50 | 14,5 | 880,83 |
| 171453 | SNI | 07 | 31,75 | 47,62 | 11,6 | 736,74 |
| 287 | SN | 05 | 32 | 40 | 5,5 | 584,56 |
| 77278 | SN | 05 | 32 | 40 | 6 | 584,56 |
| 171454 | SNI | 07 | 32 | 40 | 9 | 616,54 |
| 171455 | SNI | 07 | 32 | 42 | 11 | 656,60 |
| 171456 | SNI | 07 | 32 | 45 | 10 | 696,58 |
| 171457 | SNI | 07 | 34,92 | 50,8 | 8,5 | 736,74 |
| 188480 | SN | 05 | 35 | 43 | 6 | 526,18 |
| 189223 | SNI | 07 | 35 | 45 | 10,5 | 736,74 |
| 171460 | SNI | 07 | 36 | 43 | 6,5 | 720,66 |

# GUARNIZIONE STELO - SN 05 - SNI 07

NBR 80/
TELA IMPREGNATA NBR 90/POM

| CODICE | TIPO | TIPO | d mm | D mm | L mm | LISTINO 5-2016 X 100 PCS € |
|---|---|---|---|---|---|---|
| 188482 | SN | 05 | 36 | 44 | 6,3 | 608,54 |
| 188582 | SNI | 07 | 36 | 44 | 6,4 | 720,66 |
| 171462 | SNI | 07 | 36 | 46 | 8,5 | 736,74 |
| 171463 | SNI | 07 | 36 | 48 | 9,5 | 736,74 |
| 171526 | SNI | 07 | 36 | 48 | 12 | 768,72 |
| 171464 | SNI | 07 | 38,1 | 50,8 | 10 | 736,74 |
| 171465 | SNI | 07 | 38,1 | 53,97 | 10,5 | 768,72 |
| 192718 | SNI | 07 | 40 | 48 | 6,5 | 656,60 |
| 188687 | SN | 05 | 40 | 50 | 7 | 640,61 |
| 189291 | SNI | 07 | 40 | 50 | 8 | 736,74 |
| 188028 | SNI | 07 | 40 | 50 | 10 | 736,74 |
| 188301 | SNI | 07 | 40 | 50 | 11 | 777,36 |
| 197020 | SNI | 07 | 40 | 55 | 8 | 736,74 |
| 194635 | SNI | 07 | 40 | 55 | 11 | 736,74 |
| 171470 | SNI | 07 | 40 | 60 | 14,5 | 848,76 |
| 171471 | SNI | 07 | 42 | 52 | 9 | 736,74 |
| 171472 | SNI | 07 | 44,45 | 53,97 | 7,62 | 736,74 |
| 171473 | SNI | 07 | 44,45 | 60,32 | 11,6 | 792,70 |
| 188476 | SN | 05 | 45 | 55 | 8 | 640,61 |
| 192719 | SNI | 07 | 45 | 55 | 8 | 736,74 |
| 188449 | SNI | 07 | 45 | 55 | 10,5 | 736,74 |
| 171476 | SNI | 07 | 45 | 57 | 10 | 752,73 |
| 194057 | SNI | 07 | 45 | 60 | 10,5 | 792,70 |
| 173761 | SN | 05 | 45 | 60 | 12 | 736,74 |
| 171478 | SNI | 07 | 45 | 65 | 14,5 | 872,84 |
| 151783 | SN | 05 | 48 | 60 | 10 | 672,87 |
| 192720 | SNI | 07 | 50 | 60 | 8 | 744,73 |
| 188771 | SNI | 07 | 50 | 60 | 10 | 768,44 |
| 171482 | SNI | 07 | 54 | 66 | 9,5 | 808,79 |
| 189399 | SNI | 07 | 55 | 65 | 8 | 808,79 |
| 189321 | SNI | 07 | 55 | 65 | 10,5 | 792,52 |
| 171485 | SNI | 07 | 55 | 70 | 10,5 | 880,83 |
| 195599 | SNI | 07 | 55 | 75 | 14 | 880,84 |
| 171486 | SNI | 07 | 55 | 75 | 14,5 | 880,83 |
| 188581 | SNI | 07 | 56 | 71 | 10,5 | 880,83 |
| 171488 | SNI | 07 | 56 | 76 | 14,5 | 880,83 |
| 171489 | SNI | 07 | 57,15 | 69,85 | 10 | 808,79 |
| 192815 | SNI | 07 | 60 | 69,5 | 7 | 840,86 |
| 188478 | SN | 05 | 60 | 70 | 7,5 | 752,45 |
| 189425 | SNI | 07 | 60 | 70 | 11 | 880,83 |
| 171530 | SNI | 07 | 60 | 70 | 13 | 840,86 |
| 190001 | SN | 05 | 60 | 72 | 9,5 | 752,73 |
| 193696 | SNI | 07 | 60 | 72 | 10 | 856,76 |
| 188452 | SNI | 07 | 60 | 75 | 13 | 936,80 |
| 188558 | SNI | 07 | 60 | 80 | 14,5 | 1.032,92 |
| 190281 | SNI | 07 | 63 | 75 | 11 | 904,91 |
| 171497 | SNI | 07 | 63 | 78 | 12,5 | 936,80 |
| 171498 | SNI | 07 | 63 | 83 | 14,5 | 1.032,92 |
| 171500 | SNI | 07 | 63,5 | 76,2 | 8,5 | 840,86 |

NBR 80/
TELA IMPREGNATA NBR 90/POM

# GUARNIZIONE STELO - SN 05 - SNI 07

| CODICE | TIPO | TIPO | d mm | D mm | L mm | LISTINO 5-2016 X 100 PCS € |
|---|---|---|---|---|---|---|
| 171501 | SNI | 07 | 63,5 | 77,78 | 11,5 | 1.000,94 |
| 171499 | SNI | 07 | 63,5 | 82,55 | 14,28 | 1.032,92 |
| 189292 | SNI | 07 | 65 | 75 | 13,5 | 840,86 |
| 171503 | SNI | 07 | 65 | 77 | 9,6 | 880,83 |
| 171504 | SNI | 07 | 65 | 80 | 11,5 | 1.000,94 |
| 171531 | SNI | 07 | 65 | 80 | 12,5 | 1.000,94 |
| 197534 | SN | 05 | 70 | 80 | 7,5 | 888,83 |
| 194634 | SNI | 07 | 70 | 80 | 8 | 976,96 |
| 192721 | SNI | 07 | 70 | 80 | 13 | 1.000,94 |
| 188288 | SN | 05 | 70 | 82 | 9 | 890,04 |
| 171507 | SNI | 07 | 70 | 82 | 10,5 | 1.000,94 |
| 171508 | SNI | 07 | 70 | 84 | 12,5 | 1.065,00 |
| 188290 | SNI | 07 | 70 | 85 | 12,5 | 1.065,00 |
| 171509 | SNI | 07 | 75 | 85 | 11 | 1.073,08 |
| 188486 | SN | 05 | 75 | 87 | 9,3 | 1.075,31 |
| 171510 | SNI | 07 | 75 | 90 | 11,5 | 1.065,00 |
| 171535 | SNI | 07 | 75 | 90 | 12,8 | 1.073,08 |
| 171511 | SNI | 07 | 75 | 95 | 14,5 | 1.161,12 |
| 189172 | SN | 05 | 80 | 92 | 9 | 938,19 |
| 171512 | SNI | 07 | 80 | 93 | 14,5 | 1.073,08 |
| 188462 | SNI | 07 | 80 | 95 | 12 | 1.088,98 |
| 189314 | SN | 05 | 80 | 96 | 10 | 972,31 |
| 171514 | SNI | 07 | 80 | 96 | 10,5 | 1.088,98 |
| 173769 | SN | 05 | 80 | 100 | 14 | 1.088,98 |
| 189400 | SNI | 07 | 80 | 100 | 14,5 | 1.145,13 |
| 171516 | SNI | 07 | 85 | 95 | 8 | 1.073,08 |
| 188686 | SNI | 07 | 85 | 100 | 12 | 1.104,97 |
| 171518 | SNI | 07 | 85 | 105 | 14,5 | 1.145,13 |
| 171519 | SNI | 07 | 88,9 | 114,3 | 19,5 | 1.281,23 |
| 192828 | SNI | 07 | 90 | 105 | 9,5 | 1.104,97 |
| 196809 | SNI | 07 | 90 | 105 | 12,5 | 1.106,09 |
| 171521 | SNI | 07 | 90 | 106,2 | 10,8 | 1.104,97 |
| 192716 | SN | 05 | 90 | 110 | 12,5 | 1.057,56 |
| 188453 | SNI | 07 | 90 | 110 | 12,5 | 1.018,05 |
| 171522 | SNI | 07 | 95 | 105 | 11 | 1.104,97 |
| 171523 | SNI | 07 | 95 | 112 | 12 | 1.193,10 |
| 171524 | SNI | 07 | 95 | 115 | 14,5 | 1.193,10 |
| 171555 | SNI | 07 | 100 | 115 | 11,5 | 1.193,10 |
| 189392 | SN | 05 | 100 | 115 | 12 | 1.072,43 |
| 171538 | SNI | 07 | 100 | 115 | 12,5 | 1.193,10 |
| 171556 | SNI | 07 | 100 | 120 | 12 | 1.345,19 |
| 188125 | SN | 05 | 100 | 120 | 14 | 1.201,09 |
| 194054 | SNI | 07 | 100 | 120 | 14 | 1.377,26 |
| 171557 | SNI | 07 | 100 | 120 | 14,5 | 1.377,26 |
| 171558 | SNI | 07 | 105 | 115 | 11 | 1.121,05 |
| 171559 | SNI | 07 | 105 | 125 | 12,5 | 1.345,19 |
| 188474 | SN | 05 | 110 | 125 | 12 | 1.178,13 |
| 171560 | SNI | 07 | 110 | 125 | 12 | 1.193,10 |
| 27584 | SN | 05 | 110 | 130 | 12 | 1.178,23 |

# GUARNIZIONE STELO - SN 05 - SNI 07

NBR 80/
TELA IMPREGNATA NBR 90/POM

| CODICE | TIPO | TIPO | d mm | D mm | L mm | LISTINO 5-2016 X 100 PCS € |
|---|---|---|---|---|---|---|
| 171561 | SNI | 07 | 110 | 130 | 12,5 | 1.377,26 |
| 171562 | SNI | 07 | 110 | 135 | 15,5 | 1.449,40 |
| 171563 | SNI | 07 | 120 | 130 | 10,5 | 1.241,25 |
| 171564 | SNI | 07 | 120 | 132,7 | 10 | 1.241,25 |
| 171565 | SNI | 07 | 120 | 135 | 12,5 | 1.241,25 |
| 171566 | SNI | 07 | 120 | 140 | 12,5 | 1.801,73 |
| 171567 | SNI | 07 | 120 | 145 | 18,8 | 1.985,80 |
| 171568 | SNI | 07 | 125 | 150 | 14 | 2.202,13 |
| 171539 | SNI | 07 | 125 | 150 | 14,5 | 1.985,80 |
| 171569 | SNI | 07 | 130 | 145 | 13 | 1.809,64 |
| 171570 | SNI | 07 | 130 | 150 | 16 | 1.825,72 |
| 171571 | SNI | 07 | 135 | 150 | 14 | 1.985,80 |
| 171572 | SNI | 07 | 135 | 160 | 14 | 2.202,13 |
| 171573 | SNI | 07 | 140 | 155 | 13 | 1.857,79 |
| 197823 | SNI | 07 | 140 | 160 | 12,5 | 1.913,76 |
| 171574 | SNI | 07 | 140 | 160 | 14,5 | 1.913,76 |
| 171576 | SNI | 07 | 140 | 170 | 22,8 | 2.202,22 |
| 171577 | SNI | 07 | 145 | 157,7 | 10 | 1.985,80 |
| 171578 | SNI | 07 | 150 | 170 | 14 | 2.450,25 |
| 171579 | SNI | 07 | 150 | 170 | 14,5 | 2.450,25 |
| 188219 | SNI | 07 | 160 | 175 | 16 | 2.450,25 |
| 171581 | SNI | 07 | 160 | 180 | 14,5 | 2.450,25 |
| 171582 | SNI | 07 | 175 | 200 | 23 | 3.178,90 |
| 188863 | SNI | 07 | 180 | 200 | 14,5 | 3.267,03 |
| 171584 | SNI | 07 | 180 | 210 | 20,5 | 3.427,21 |
| 171585 | SNI | 07 | 190 | 210 | 14,5 | 3.483,27 |
| 171586 | SNI | 07 | 198 | 208 | 12 | 3.267,03 |
| 171587 | SNI | 07 | 200 | 220 | 14,5 | 3.963,70 |
| 171589 | SNI | 07 | 220 | 250 | 20,5 | 7.006,60 |
| 171590 | SNI | 07 | 230 | 260 | 20,5 | 7.270,71 |

# Guarnizione stelo

NBR 90

SNI 24

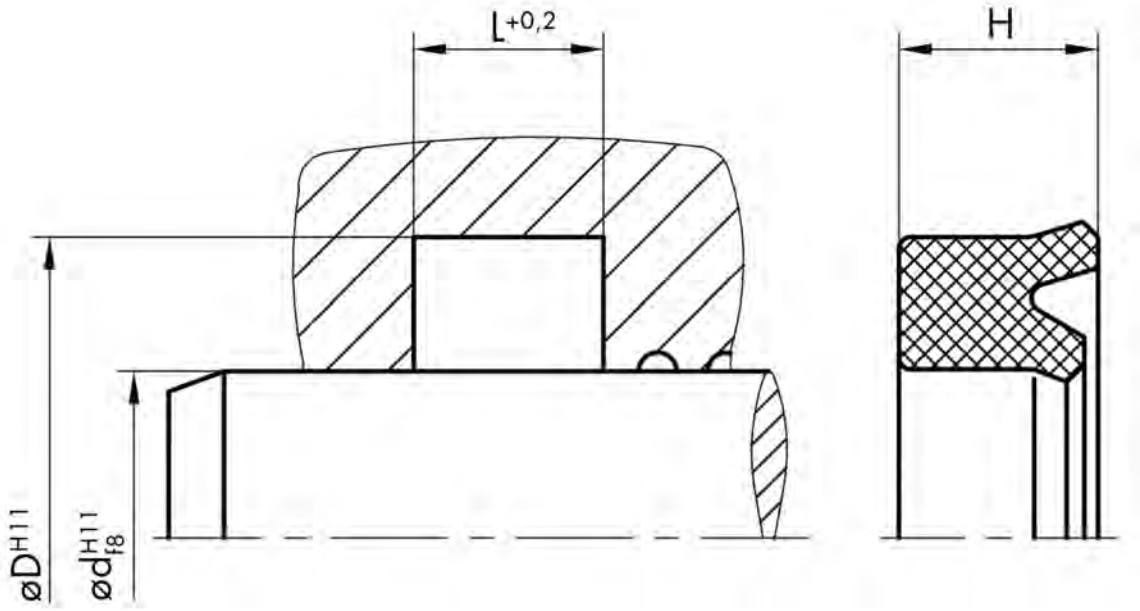
L+0,2
H
øD H11
ød H11 f8

# GUARNIZIONE STELO - SNI 24

| CODICE | TIPO | MAT. | d mm | D mm | L mm | H mm | LISTINO 5-2016 X 100 PCS € |
|---|---|---|---|---|---|---|---|
| 192493 | SNI 24 | NBR | 4 | 8 | 3,5 | 3 | 86,16 |
| 11016 | SNI 24 | NBR | 4 | 9 | 4 | 3,5 | 104,62 |
| 189886 | SNI 24 | NBR | 4 | 12 | 5 | 4,5 | 104,62 |
| 61509 | SNI 24 | NBR | 4,76 | 11,11 | 3,96 | 0 | 81,44 |
| 192496 | SNI 24 | NBR | 6 | 12 | 4,5 | 4 | 110,03 |
| 192497 | SNI 24 | NBR | 6 | 12 | 5 | 4 | 126,96 |
| 192498 | SNI 24 | NBR | 6,35 | 12,7 | 5,56 | 3,96 | 106,56 |
| 194059 | SNI 24 | NBR | 8 | 14 | 4,5 | 4 | 109,90 |
| 194655 | SNI 24 | NBR | 8 | 16 | 6,5 | 5,5 | 109,90 |
| 107254 | SNI 24 | NBR | 9 | 15 | 10 | 9 | 109,90 |
| 190538 | SNI 24 | NBR | 9,52 | 16,5 | 5,56 | 3,96 | 130,83 |
| 189477 | SNI 24 | NBR | 10 | 16 | 5,5 | 4,5 | 150,96 |
| 189171 | SNI 24 | NBR | 10 | 18 | 6,5 | 5,5 | 130,83 |
| 190009 | SNI 24 | NBR | 12 | 18 | 5 | 4,5 | 177,60 |
| 188650 | SNI 24 | NBR | 12 | 20 | 6,5 | 5,5 | 124,45 |
| 188753 | SNI 24 | NBR | 14 | 22 | 6,5 | 5,5 | 133,33 |
| 189426 | SNI 24 | NBR | 14,28 | 20,63 | 6,35 | 4,76 | 177,01 |
| 190282 | SNI 24 | NBR | 15,87 | 22,22 | 6,35 | 4,76 | 169,31 |
| 188651 | SNI 24 | NBR | 16 | 22,5 | 5 | 4,5 | 144,07 |
| 189938 | SNI 24 | NBR | 16 | 24 | 6 | 5 | 166,48 |
| 188189 | SNI 24 | NBR | 16 | 24 | 6,5 | 5,5 | 162,24 |
| 22199 | SNI 24 | NBR | 17,46 | 23,81 | 4,76 | 0 | 94,72 |
| 172884 | SNI 24 | NBR | 17,46 | 23,81 | 6,35 | 4,76 | 127,23 |
| 61518 | SNI 24 | NBR | 18 | 25 | 4,5 | 0 | 75,84 |
| 192500 | SNI 24 | NBR | 18 | 25 | 5,5 | 4,5 | 126,01 |
| 188939 | SNI 24 | NBR | 18 | 25 | 6,5 | 5,5 | 163,76 |
| 188741 | SNI 24 | NBR | 19,05 | 25,4 | 5,26 | 4,76 | 159,12 |
| 188664 | SNI 24 | NBR | 20 | 28 | 6,5 | 5,5 | 137,90 |
| 189476 | SNI 24 | NBR | 22 | 30 | 6,5 | 5,7 | 230,88 |
| 172888 | SNI 24 | NBR | 22,22 | 31,75 | 6,35 | 4,76 | 157,57 |
| 172889 | SNI 24 | NBR | 23,81 | 36,51 | 7,14 | 6,35 | 168,45 |
| 192829 | SNI 24 | NBR | 25 | 33 | 6,5 | 5,5 | 188,96 |
| 190273 | SNI 24 | NBR | 25 | 35 | 7 | 6 | 193,76 |
| 188649 | SNI 24 | NBR | 25 | 35 | 8 | 7 | 205,36 |
| 117991 | SNI 24 | NBR | 25 | 37 | 7 | 6 | 189,13 |
| 22201 | SNI 24 | NBR | 25,4 | 38,1 | 7,14 | 6,35 | 123,36 |
| 192502 | SNI 24 | NBR | 26,99 | 36,51 | 7,14 | 6,35 | 123,84 |
| 189278 | SNI 24 | NBR | 28 | 36 | 6,5 | 5,5 | 189,13 |
| 192503 | SNI 24 | NBR | 28 | 38 | 9 | 8 | 199,80 |
| 191403 | SNI 24 | NBR | 30 | 38 | 6,7 | 5,7 | 266,40 |
| 188488 | SNI 24 | NBR | 30 | 40 | 8 | 7 | 220,66 |
| 192506 | SNI 24 | NBR | 30,16 | 38,1 | 7,14 | 6,35 | 220,65 |
| 172891 | SNI 24 | NBR | 31,75 | 44,45 | 7,14 | 6,35 | 220,65 |
| 188314 | SNI 24 | NBR | 32 | 42 | 8 | 7 | 220,65 |
| 192507 | SNI 24 | NBR | 32 | 48 | 9 | 8 | 220,65 |
| 172991 | SNI 24 | NBR | 33,33 | 40,64 | 6,35 | 4,76 | 220,65 |
| 90017 | SNI 24 | NBR | 34 | 44 | 8 | 7 | 220,65 |
| 172992 | SNI 24 | NBR | 34,92 | 50,8 | 8,72 | 7,93 | 242,25 |
| 192508 | SNI 24 | NBR | 35 | 45 | 8 | 7 | 242,25 |

# GUARNIZIONE STELO - SNI 24

NBR 90

| CODICE | TIPO | MAT. | d mm | D mm | L mm | H mm | LISTINO 5-2016 X 100 PCS € |
|---|---|---|---|---|---|---|---|
| 188742 | SNI 24 | NBR | 36 | 46 | 7,5 | 7 | 242,25 |
| 172994 | SNI 24 | NBR | 38,1 | 50,8 | 10,31 | 9,52 | 242,25 |
| 188148 | SNI 24 | NBR | 40 | 48 | 9 | 8 | 246,13 |
| 189215 | SNI 24 | NBR | 40 | 50 | 8 | 7 | 286,00 |
| 195600 | SNI 24 | NBR | 41,27 | 50,8 | 7,14 | 5,56 | 270,12 |
| 172996 | SNI 24 | NBR | 42,86 | 53,97 | 10,31 | 9,52 | 294,46 |
| 172997 | SNI 24 | NBR | 44,45 | 57,15 | 8,72 | 7,93 | 304,82 |
| 188162 | SNI 24 | NBR | 45 | 55 | 8 | 7 | 283,52 |
| 41442 | SNI 24 | NBR | 49,21 | 66,67 | 10,31 | 9,52 | 350,61 |
| 188546 | SNI 24 | NBR | 50 | 60 | 8 | 7 | 311,04 |
| 188315 | SNI 24 | NBR | 56 | 68 | 9,5 | 8,5 | 388,94 |
| 188648 | SNI 24 | NBR | 60 | 72 | 9,5 | 8,5 | 420,51 |
| 20867 | SNI 24 | NBR | 60,32 | 76,2 | 8,72 | 7,93 | 260,08 |
| 192510 | SNI 24 | NBR | 63 | 75 | 9,5 | 8,5 | 420,51 |
| 189771 | SNI 24 | NBR | 70 | 82 | 9,5 | 8,5 | 420,51 |
| 61563 | SNI 24 | NBR | 76,2 | 88,9 | 10,31 | 9,52 | 330,80 |
| 188646 | SNI 24 | NBR | 80 | 92 | 9,5 | 8,5 | 469,23 |
| 49601 | SNI 24 | NBR | 88,9 | 101,6 | 10,31 | 9,52 | 357,92 |
| 188647 | SNI 24 | NBR | 90 | 102 | 9,5 | 8,5 | 469,23 |
| 173000 | SNI 24 | NBR | 100 | 115 | 11 | 10 | 670,45 |
| 192511 | SNI 24 | NBR | 100 | 115 | 11 | 10 | 670,45 |
| 192512 | SNI 24 | NBR | 110 | 130 | 15 | 14 | 788,56 |
| 173002 | SNI 24 | NBR | 125 | 145 | 15 | 14 | 858,69 |
| 173003 | SNI 24 | NBR | 140 | 160 | 15 | 14 | 902,71 |

# Guarnizione stelo

NBR 90

SN 21

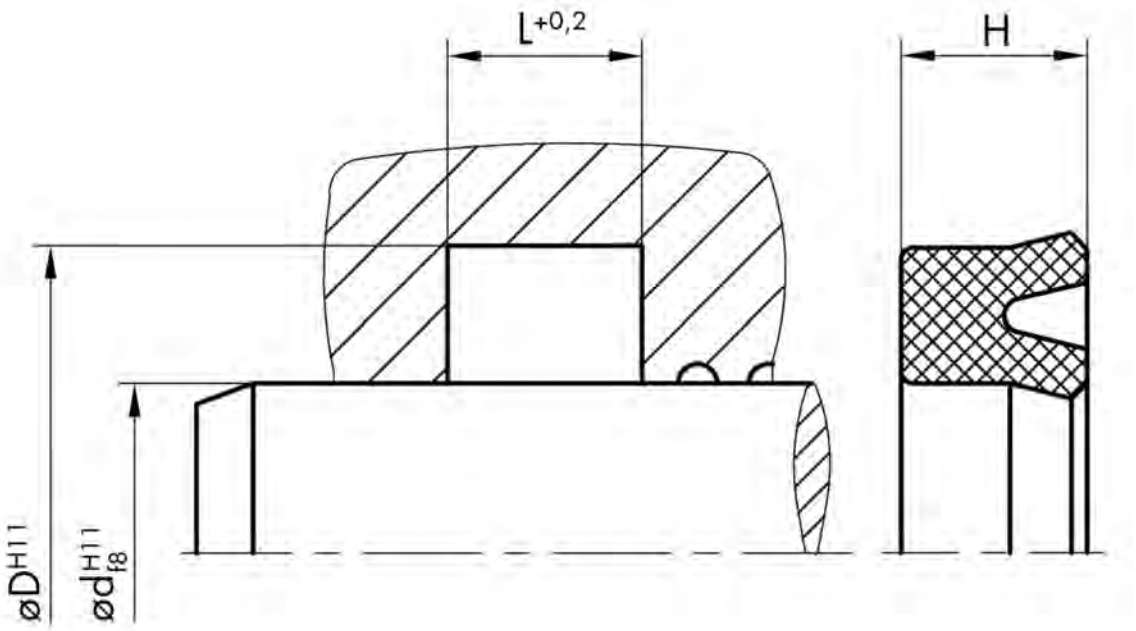
L+0,2
H
øD H11
ød H11 f8

# GUARNIZIONE STELO - SN 21

| CODICE | TIPO | MAT. | d mm | D mm | L mm | H mm | LISTINO 5-2016 X 100 PCS € |
|---|---|---|---|---|---|---|---|
| 21289 | SN 21 | NBR | 4 | 7,5 | 3,5 | 3 | 115,59 |
| 192351 | SN 21 | NBR | 4 | 10 | 5,5 | 4,5 | 115,59 |
| 192745 | SN 21 | NBR | 4 | 10 | 6 | 5 | 115,59 |
| 188751 | SN 21 | NBR | 4 | 12 | 4,5 | 4 | 115,59 |
| 90208 | SN 21 | NBR | 4 | 12 | 6,5 | 5,5 | 115,59 |
| 190278 | SN 21 | NBR | 5 | 10 | 4,5 | 4 | 115,59 |
| 188492 | SN 21 | NBR | 5 | 11 | 6 | 5 | 115,59 |
| 192357 | SN 21 | NBR | 5 | 11 | 8 | 7 | 115,59 |
| 188502 | SN 21 | NBR | 5 | 12 | 6 | 5 | 115,59 |
| 123157 | SN 21 | NBR | 6 | 10 | 3,5 | 3 | 115,59 |
| 192352 | SN 21 | NBR | 6 | 12 | 4,5 | 4 | 115,59 |
| 188228 | SN 21 | NBR | 6 | 12 | 7 | 6 | 115,59 |
| 189622 | SN 21 | NBR | 6 | 12 | 8 | 7 | 115,59 |
| 172835 | SN 21 | NBR | 6 | 14 | 5 | 4 | 115,59 |
| 188167 | SN 21 | NBR | 6 | 15 | 6 | 5 | 115,59 |
| 189200 | SN 21 | NBR | 6 | 16 | 6 | 5 | 115,59 |
| 188555 | SN 21 | NBR | 6 | 16 | 7 | 6 | 115,59 |
| 27071 | SN 21 | NBR | 6 | 18 | 9 | 8 | 115,59 |
| 172833 | SN 21 | NBR | 6 | 20 | 9 | 8 | 115,59 |
| 188920 | SN 21 | NBR | 8 | 12 | 6 | 5 | 115,59 |
| 194275 | SN 21 | NBR | 8 | 14 | 4,5 | 4 | 115,59 |
| 193088 | SN 21 | NBR | 8 | 14 | 7 | 6 | 115,59 |
| 192346 | SN 21 | NBR | 8 | 15 | 7 | 6 | 115,59 |
| 192342 | SN 21 | NBR | 8 | 16 | 7 | 6 | 115,59 |
| 26217 | SN 21 | NBR | 8 | 16 | 9 | 8 | 115,59 |
| 188231 | SN 21 | NBR | 8 | 18 | 9 | 8 | 115,59 |
| 62340 | SN 21 | NBR | 9 | 19 | 7 | 6 | 115,59 |
| 189140 | SN 21 | NBR | 10 | 16 | 4,5 | 4 | 115,59 |
| 188512 | SN 21 | NBR | 10 | 16 | 6 | 5 | 115,59 |
| 193692 | SN 21 | NBR | 10 | 16 | 7 | 6 | 115,59 |
| 188758 | SN 21 | NBR | 10 | 18 | 5 | 4 | 115,59 |
| 188299 | SN 21 | NBR | 10 | 18 | 7 | 6 | 115,59 |
| 46964 | SN 21 | NBR | 10 | 20 | 8 | 7 | 115,59 |
| 188500 | SN 21 | NBR | 10 | 20 | 9 | 8 | 115,59 |
| 189202 | SN 21 | NBR | 10 | 22 | 7 | 6 | 131,62 |
| 188786 | SN 21 | NBR | 10 | 22 | 9 | 8 | 131,62 |
| 188350 | SN 21 | NBR | 10 | 25 | 11 | 10 | 151,51 |
| 27078 | SN 21 | NBR | 10 | 26 | 9 | 8 | 151,51 |
| 192358 | SN 21 | NBR | 12 | 18 | 4,5 | 4 | 115,59 |
| 189276 | SN 21 | NBR | 12 | 18 | 6 | 5 | 115,59 |
| 196995 | SN 21 | NBR | 12 | 18 | 7 | 6 | 115,59 |
| 188494 | SN 21 | NBR | 12 | 20 | 9 | 8 | 115,59 |
| 188726 | SN 21 | NBR | 12 | 22 | 6 | 5 | 131,62 |
| 193204 | SN 21 | NBR | 12 | 22 | 7 | 6 | 131,62 |
| 194847 | SN 21 | NBR | 12 | 22 | 8 | 7 | 131,62 |
| 189184 | SN 21 | NBR | 12 | 24 | 7 | 6 | 131,62 |
| 189707 | SN 21 | NBR | 12 | 24 | 11 | 10 | 131,62 |
| 188083 | SN 21 | NBR | 12 | 25 | 9 | 8 | 151,51 |
| 172843 | SN 21 | NBR | 12 | 26 | 11 | 10 | 151,51 |

# GUARNIZIONE STELO - SN 21

NBR 90

| CODICE | TIPO | MAT. | d mm | D mm | L mm | H mm | LISTINO 5-2016 X 100 PCS € |
|---|---|---|---|---|---|---|---|
| 172845 | SN 21 | NBR | 12 | 32 | 11 | 10 | 176,63 |
| 90210 | SN 21 | NBR | 14 | 20 | 7 | 6 | 115,59 |
| 188255 | SN 21 | NBR | 14 | 22 | 4,5 | 4 | 131,62 |
| 189194 | SN 21 | NBR | 14 | 22 | 6 | 5 | 131,62 |
| 196579 | SN 21 | NBR | 14 | 22 | 9 | 8 | 131,62 |
| 188518 | SN 21 | NBR | 14 | 24 | 6 | 5 | 131,62 |
| 188504 | SN 21 | NBR | 14 | 24 | 7 | 6 | 131,62 |
| 172847 | SN 21 | NBR | 14 | 28 | 8 | 7 | 161,97 |
| 188329 | SN 21 | NBR | 15 | 20 | 3,5 | 3 | 115,59 |
| 188644 | SN 21 | NBR | 15 | 25 | 6 | 5 | 151,51 |
| 188642 | SN 21 | NBR | 15 | 25 | 7 | 6 | 151,51 |
| 188302 | SN 21 | NBR | 15 | 25 | 9 | 8 | 151,51 |
| 26223 | SN 21 | NBR | 15 | 28 | 11 | 10 | 161,97 |
| 188514 | SN 21 | NBR | 15 | 30 | 9 | 8 | 176,63 |
| 189182 | SN 21 | NBR | 15 | 30 | 11 | 10 | 176,63 |
| 188806 | SN 21 | NBR | 16 | 22 | 3,5 | 3 | 131,62 |
| 189227 | SN 21 | NBR | 16 | 22 | 6 | 5 | 131,62 |
| 188728 | SN 21 | NBR | 16 | 24 | 4,5 | 4 | 131,62 |
| 195567 | SN 21 | NBR | 16 | 24 | 7 | 6 | 131,62 |
| 189333 | SN 21 | NBR | 16 | 25 | 6 | 5 | 151,51 |
| 190506 | SN 21 | NBR | 16 | 26 | 6 | 5 | 151,51 |
| 27092 | SN 21 | NBR | 16 | 26 | 7 | 6 | 151,51 |
| 192361 | SN 21 | NBR | 16 | 28 | 7 | 6 | 161,97 |
| 133332 | SN 21 | NBR | 16 | 29 | 7 | 6 | 176,63 |
| 26307 | SN 21 | NBR | 16 | 32 | 11 | 10 | 176,63 |
| 189192 | SN 21 | NBR | 18 | 25 | 6 | 5 | 151,51 |
| 189196 | SN 21 | NBR | 18 | 25 | 6,5 | 5,5 | 151,51 |
| 192044 | SN 21 | NBR | 18 | 26 | 6 | 5 | 151,51 |
| 194668 | SN 21 | NBR | 18 | 28 | 7 | 6 | 161,97 |
| 194888 | SN 21 | NBR | 18 | 28 | 9 | 8 | 161,97 |
| 193086 | SN 21 | NBR | 18 | 30 | 7 | 6 | 176,63 |
| 90213 | SN 21 | NBR | 18 | 30 | 8,5 | 7,5 | 176,63 |
| 90214 | SN 21 | NBR | 18 | 30 | 9,5 | 8,5 | 176,63 |
| 193688 | SN 21 | NBR | 18 | 30 | 11 | 10 | 176,63 |
| 46973 | SN 21 | NBR | 18 | 32 | 8 | 7 | 176,63 |
| 195565 | SN 21 | NBR | 20 | 27 | 7 | 6 | 161,97 |
| 189864 | SN 21 | NBR | 20 | 28 | 6 | 5 | 161,97 |
| 194659 | SN 21 | NBR | 20 | 30 | 6 | 5 | 176,63 |
| 188186 | SN 21 | NBR | 20 | 30 | 7 | 6 | 176,63 |
| 188141 | SN 21 | NBR | 20 | 30 | 9 | 8 | 176,63 |
| 192359 | SN 21 | NBR | 20 | 32 | 7 | 6 | 176,63 |
| 190515 | SN 21 | NBR | 20 | 32 | 8,5 | 7,5 | 176,63 |
| 188029 | SN 21 | NBR | 20 | 35 | 11 | 10 | 192,12 |
| 188222 | SN 21 | NBR | 20 | 36 | 9 | 8 | 192,12 |
| 188790 | SN 21 | NBR | 20 | 40 | 11 | 10 | 242,52 |
| 26312 | SN 21 | NBR | 20 | 40 | 13 | 12 | 242,52 |
| 188102 | SN 21 | NBR | 22 | 30 | 6 | 5 | 176,63 |
| 188099 | SN 21 | NBR | 22 | 30 | 7 | 6 | 176,63 |
| 192696 | SN 21 | NBR | 22 | 32 | 6 | 5 | 176,63 |

# GUARNIZIONE STELO - SN 21

| CODICE | TIPO | MAT. | d mm | D mm | L mm | H mm | LISTINO 5-2016 X 100 PCS € |
|---|---|---|---|---|---|---|---|
| 188224 | SN 21 | NBR | 22 | 32 | 7 | 6 | 176,63 |
| 188236 | SN 21 | NBR | 22 | 32 | 8 | 7 | 176,63 |
| 188856 | SN 21 | NBR | 22 | 32 | 9 | 8 | 176,63 |
| 190551 | SN 21 | NBR | 22 | 34 | 7 | 6 | 176,63 |
| 195562 | SN 21 | NBR | 22 | 38 | 11 | 10 | 232,95 |
| 172857 | SN 21 | NBR | 22 | 46 | 13 | 12 | 252,81 |
| 188079 | SN 21 | NBR | 24 | 32 | 4,5 | 4 | 176,63 |
| 188094 | SN 21 | NBR | 24 | 34 | 6 | 5 | 176,63 |
| 188547 | SN 21 | NBR | 25 | 32 | 4,5 | 4 | 176,63 |
| 188077 | SN 21 | NBR | 25 | 32 | 8 | 7 | 176,63 |
| 190549 | SN 21 | NBR | 25 | 33 | 4,5 | 4 | 176,63 |
| 193602 | SN 21 | NBR | 25 | 33 | 6 | 5 | 176,63 |
| 188136 | SN 21 | NBR | 25 | 33 | 8 | 7 | 176,63 |
| 188181 | SN 21 | NBR | 25 | 35 | 6 | 5 | 192,12 |
| 188804 | SN 21 | NBR | 25 | 35 | 7 | 6 | 192,12 |
| 188326 | SN 21 | NBR | 25 | 35 | 8 | 7 | 192,12 |
| 192347 | SN 21 | NBR | 25 | 35 | 9 | 8 | 192,12 |
| 189992 | SN 21 | NBR | 25 | 37 | 8 | 7 | 192,12 |
| 188143 | SN 21 | NBR | 25 | 38 | 8 | 7 | 232,95 |
| 190402 | SN 21 | NBR | 25 | 40 | 8,5 | 7,5 | 242,52 |
| 188817 | SN 21 | NBR | 25 | 40 | 11 | 10 | 242,52 |
| 196422 | SN 21 | NBR | 25 | 45 | 11 | 10 | 252,81 |
| 189335 | SN 21 | NBR | 26 | 42 | 9 | 8 | 242,52 |
| 172859 | SN 21 | NBR | 28 | 36 | 5 | 4 | 192,12 |
| 188115 | SN 21 | NBR | 28 | 36 | 6 | 5 | 192,12 |
| 190523 | SN 21 | NBR | 28 | 36 | 7 | 6 | 192,12 |
| 190306 | SN 21 | NBR | 28 | 38 | 6 | 5 | 232,95 |
| 192698 | SN 21 | NBR | 28 | 40 | 7 | 6 | 242,52 |
| 192353 | SN 21 | NBR | 28 | 40 | 11 | 10 | 242,52 |
| 194670 | SN 21 | NBR | 28 | 43 | 11 | 10 | 242,52 |
| 27125 | SN 21 | NBR | 28 | 48 | 11 | 10 | 283,14 |
| 188625 | SN 21 | NBR | 30 | 40 | 6 | 5 | 242,52 |
| 197230 | SN 21 | NBR | 30 | 40 | 7 | 6 | 242,52 |
| 188198 | SN 21 | NBR | 30 | 40 | 8 | 7 | 242,52 |
| 188297 | SN 21 | NBR | 30 | 40 | 11 | 10 | 242,52 |
| 188490 | SN 21 | NBR | 30 | 42 | 11 | 10 | 242,52 |
| 196997 | SN 21 | NBR | 30 | 45 | 11 | 10 | 252,81 |
| 189331 | SN 21 | NBR | 30 | 50 | 11 | 10 | 283,14 |
| 188782 | SN 21 | NBR | 30 | 50 | 13 | 12 | 283,14 |
| 188798 | SN 21 | NBR | 32 | 40 | 4,5 | 4 | 242,52 |
| 189711 | SN 21 | NBR | 32 | 40 | 6 | 5 | 242,52 |
| 188510 | SN 21 | NBR | 32 | 40 | 9 | 8 | 242,52 |
| 189337 | SN 21 | NBR | 32 | 42 | 7 | 6 | 242,52 |
| 196993 | SN 21 | NBR | 32 | 44 | 7 | 6 | 252,81 |
| 188165 | SN 21 | NBR | 32 | 45 | 11 | 10 | 252,81 |
| 188508 | SN 21 | NBR | 32 | 52 | 11 | 10 | 303,02 |
| 190534 | SN 21 | NBR | 34 | 44 | 6 | 5 | 252,81 |
| 188496 | SN 21 | NBR | 35 | 45 | 7 | 6 | 252,81 |
| 189857 | SN 21 | NBR | 35 | 45 | 11 | 10 | 252,81 |

# GUARNIZIONE STELO - SN 21

NBR 90

| CODICE | TIPO | MAT. | d mm | D mm | L mm | H mm | LISTINO 5-2016 X 100 PCS € |
|---|---|---|---|---|---|---|---|
| 189190 | SN 21 | NBR | 35 | 50 | 8,5 | 7,5 | 283,14 |
| 189421 | SN 21 | NBR | 35 | 50 | 11 | 10 | 283,14 |
| 192700 | SN 21 | NBR | 35 | 52 | 13 | 12 | 303,02 |
| 188549 | SN 21 | NBR | 35 | 55 | 13 | 12 | 303,02 |
| 61045 | SN 21 | NBR | 36 | 46 | 6 | 5 | 252,81 |
| 189198 | SN 21 | NBR | 36 | 46 | 8 | 7 | 252,81 |
| 188587 | SN 21 | NBR | 36 | 50 | 9 | 8 | 283,14 |
| 59497 | SN 21 | NBR | 36 | 51 | 8,1 | 7,1 | 283,14 |
| 194678 | SN 21 | NBR | 38 | 50 | 7 | 6 | 283,14 |
| 56000 | SN 21 | NBR | 38 | 55 | 11 | 10 | 303,02 |
| 27136 | SN 21 | NBR | 38 | 58 | 11 | 10 | 334,05 |
| 188893 | SN 21 | NBR | 40 | 50 | 6 | 5 | 283,14 |
| 190266 | SN 21 | NBR | 40 | 50 | 7 | 6 | 283,14 |
| 188172 | SN 21 | NBR | 40 | 50 | 8 | 7 | 283,14 |
| 192343 | SN 21 | NBR | 40 | 50 | 10 | 9 | 283,14 |
| 188792 | SN 21 | NBR | 40 | 50 | 11 | 10 | 283,14 |
| 188085 | SN 21 | NBR | 40 | 55 | 11 | 10 | 303,02 |
| 192820 | SN 21 | NBR | 40 | 56 | 11 | 10 | 303,02 |
| 189784 | SN 21 | NBR | 40 | 60 | 11 | 10 | 343,85 |
| 190253 | SN 21 | NBR | 40 | 60 | 13 | 12 | 343,85 |
| 192112 | SN 21 | NBR | 42 | 50 | 6 | 5 | 283,14 |
| 192747 | SN 21 | NBR | 42 | 50 | 7 | 6 | 283,14 |
| 193091 | SN 21 | NBR | 42 | 55 | 9 | 8 | 303,02 |
| 47021 | SN 21 | NBR | 43 | 63 | 11 | 10 | 343,85 |
| 189180 | SN 21 | NBR | 45 | 55 | 7 | 6 | 303,02 |
| 188858 | SN 21 | NBR | 45 | 57 | 7 | 6 | 303,02 |
| 192345 | SN 21 | NBR | 45 | 58 | 11 | 10 | 334,05 |
| 194661 | SN 21 | NBR | 45 | 60 | 11 | 10 | 343,85 |
| 192354 | SN 21 | NBR | 45 | 63 | 11 | 10 | 343,85 |
| 189786 | SN 21 | NBR | 45 | 63 | 13 | 12 | 343,85 |
| 188030 | SN 21 | NBR | 45 | 65 | 11 | 10 | 343,85 |
| 188788 | SN 21 | NBR | 45 | 65 | 13 | 12 | 343,85 |
| 172865 | SN 21 | NBR | 46 | 70 | 13 | 12 | 373,99 |
| 188096 | SN 21 | NBR | 48 | 60 | 7 | 6 | 343,85 |
| 188794 | SN 21 | NBR | 48 | 68 | 11 | 10 | 343,85 |
| 196585 | SN 21 | NBR | 48 | 68 | 13 | 12 | 343,85 |
| 188498 | SN 21 | NBR | 50 | 60 | 6 | 5 | 343,85 |
| 189279 | SN 21 | NBR | 50 | 60 | 7 | 6 | 343,85 |
| 188516 | SN 21 | NBR | 50 | 60 | 8 | 7 | 343,85 |
| 189709 | SN 21 | NBR | 50 | 60 | 11 | 10 | 343,85 |
| 192743 | SN 21 | NBR | 50 | 62 | 7 | 6 | 343,85 |
| 194680 | SN 21 | NBR | 50 | 63 | 7 | 6 | 343,85 |
| 189289 | SN 21 | NBR | 50 | 65 | 11 | 10 | 343,85 |
| 188291 | SN 21 | NBR | 50 | 65 | 13 | 12 | 343,85 |
| 189859 | SN 21 | NBR | 50 | 70 | 11 | 10 | 373,99 |
| 192344 | SN 21 | NBR | 50 | 70 | 13 | 12 | 373,99 |
| 172868 | SN 21 | NBR | 50,8 | 60,32 | 6,35 | 4,76 | 343,85 |
| 189789 | SN 21 | NBR | 53 | 63 | 7 | 6 | 343,85 |
| 193206 | SN 21 | NBR | 53 | 63 | 8,5 | 7,5 | 343,85 |

# GUARNIZIONE STELO - SN 21

| CODICE | TIPO | MAT. | d mm | D mm | L mm | H mm | LISTINO 5-2016 X 100 PCS € |
|---|---|---|---|---|---|---|---|
| 189990 | SN 21 | NBR | 55 | 65 | 6 | 5 | 343,85 |
| 189994 | SN 21 | NBR | 55 | 70 | 8,5 | 7,5 | 373,99 |
| 188239 | SN 21 | NBR | 55 | 70 | 11 | 10 | 373,99 |
| 189988 | SN 21 | NBR | 55 | 70 | 13 | 12 | 373,99 |
| 188293 | SN 21 | NBR | 55 | 75 | 13 | 12 | 373,99 |
| 188081 | SN 21 | NBR | 55 | 80 | 13 | 12 | 425,06 |
| 63016 | SN 21 | NBR | 56 | 70 | 13 | 12 | 373,99 |
| 188273 | SN 21 | NBR | 58 | 70 | 7 | 6 | 373,99 |
| 27166 | SN 21 | NBR | 58 | 78 | 13 | 12 | 373,99 |
| 188689 | SN 21 | NBR | 60 | 70 | 7 | 6 | 373,99 |
| 189791 | SN 21 | NBR | 60 | 70 | 8 | 7 | 373,99 |
| 189186 | SN 21 | NBR | 60 | 70 | 13 | 12 | 373,99 |
| 27169 | SN 21 | NBR | 60 | 75 | 13 | 12 | 373,99 |
| 188691 | SN 21 | NBR | 60 | 80 | 11 | 10 | 425,06 |
| 189780 | SN 21 | NBR | 60 | 80 | 13 | 12 | 425,06 |
| 192355 | SN 21 | NBR | 65 | 75 | 7 | 6 | 373,99 |
| 192040 | SN 21 | NBR | 65 | 85 | 13 | 12 | 505,60 |
| 27177 | SN 21 | NBR | 65 | 90 | 13 | 12 | 505,60 |
| 192356 | SN 21 | NBR | 68 | 80 | 13 | 12 | 425,06 |
| 63071 | SN 21 | NBR | 70 | 80 | 7 | 6 | 425,06 |
| 192707 | SN 21 | NBR | 70 | 80 | 8 | 7 | 425,06 |
| 27181 | SN 21 | NBR | 70 | 80 | 13 | 12 | 425,06 |
| 196419 | SN 21 | NBR | 70 | 85 | 8,5 | 7,5 | 505,60 |
| 188730 | SN 21 | NBR | 70 | 85 | 9 | 8 | 505,60 |
| 192348 | SN 21 | NBR | 70 | 85 | 13 | 12 | 505,60 |
| 188506 | SN 21 | NBR | 70 | 90 | 11 | 10 | 505,60 |
| 188784 | SN 21 | NBR | 70 | 90 | 13 | 12 | 505,60 |
| 118255 | SN 21 | NBR | 72 | 82 | 6 | 5 | 425,06 |
| 197233 | SN 21 | NBR | 75 | 95 | 11 | 10 | 566,98 |
| 189986 | SN 21 | NBR | 75 | 95 | 13 | 12 | 566,98 |
| 26330 | SN 21 | NBR | 75 | 100 | 16 | 15 | 515,88 |
| 118256 | SN 21 | NBR | 78 | 88 | 6 | 5 | 505,60 |
| 188796 | SN 21 | NBR | 80 | 90 | 6 | 5 | 505,60 |
| 189395 | SN 21 | NBR | 80 | 90 | 7 | 6 | 505,60 |
| 188732 | SN 21 | NBR | 80 | 90 | 8 | 7 | 505,60 |
| 189188 | SN 21 | NBR | 80 | 100 | 11 | 10 | 515,88 |
| 188295 | SN 21 | NBR | 80 | 100 | 13 | 12 | 515,88 |
| 188997 | SN 21 | NBR | 80 | 100 | 16 | 15 | 515,88 |
| 27194 | SN 21 | NBR | 80 | 105 | 13 | 12 | 559,30 |
| 188551 | SN 21 | NBR | 82 | 92 | 11 | 10 | 505,60 |
| 192349 | SN 21 | NBR | 85 | 100 | 13 | 12 | 515,88 |
| 196587 | SN 21 | NBR | 85 | 105 | 11 | 10 | 559,30 |
| 192704 | SN 21 | NBR | 85 | 105 | 13 | 12 | 559,30 |
| 190536 | SN 21 | NBR | 90 | 100 | 6 | 5 | 515,88 |
| 193690 | SN 21 | NBR | 90 | 110 | 16 | 15 | 731,36 |
| 188553 | SN 21 | NBR | 95 | 110 | 10 | 9 | 731,36 |
| 26335 | SN 21 | NBR | 95 | 115 | 16 | 15 | 731,36 |
| 188724 | SN 21 | NBR | 95 | 125 | 16 | 15 | 903,56 |
| 188800 | SN 21 | NBR | 100 | 110 | 6 | 5 | 731,36 |

# GUARNIZIONE STELO - SN 21

NBR 90

| CODICE | TIPO | MAT. | d mm | D mm | L mm | H mm | LISTINO 5-2016 X 100 PCS € |
|---|---|---|---|---|---|---|---|
| 188916 | SN 21 | NBR | 100 | 120 | 11 | 10 | 817,47 |
| 194675 | SN 21 | NBR | 100 | 120 | 13 | 12 | 817,47 |
| 196460 | SN 21 | NBR | 100 | 120 | 16 | 15 | 817,47 |
| 189174 | SN 21 | NBR | 100 | 125 | 16 | 15 | 903,56 |
| 26339 | SN 21 | NBR | 110 | 135 | 19 | 18 | 989,67 |
| 188808 | SN 21 | NBR | 110 | 140 | 19 | 18 | 989,67 |
| 188075 | SN 21 | NBR | 115 | 140 | 19 | 18 | 989,67 |
| 27228 | SN 21 | NBR | 120 | 150 | 16 | 15 | 1.290,65 |
| 196424 | SN 21 | NBR | 125 | 140 | 10 | 9 | 989,67 |
| 26342 | SN 21 | NBR | 125 | 150 | 19 | 18 | 1.290,65 |
| 192350 | SN 21 | NBR | 125 | 155 | 16 | 15 | 1.290,65 |
| 26343 | SN 21 | NBR | 125 | 155 | 19 | 18 | 1.290,65 |
| 189178 | SN 21 | NBR | 130 | 160 | 16 | 15 | 1.290,65 |
| 188241 | SN 21 | NBR | 130 | 160 | 19 | 18 | 1.290,65 |
| 90297 | SN 21 | NBR | 140 | 160 | 9 | 8 | 1.290,65 |
| 188031 | SN 21 | NBR | 145 | 170 | 19 | 18 | 1.376,77 |
| 195560 | SN 21 | NBR | 150 | 180 | 19 | 18 | 1.462,85 |
| 189939 | SN 21 | NBR | 160 | 180 | 16 | 15 | 1.462,85 |
| 188087 | SN 21 | NBR | 160 | 190 | 23 | 22 | 1.807,13 |
| 188446 | SN 21 | NBR | 170 | 200 | 16 | 15 | 2.151,53 |
| 192858 | SN 21 | NBR | 170 | 200 | 23 | 22 | 2.151,53 |
| 193081 | SN 21 | NBR | 200 | 230 | 16 | 15 | 2.527,65 |
| 189176 | SN 21 | NBR | 200 | 230 | 23 | 22 | 2.527,65 |
| 188110 | SN 21 | NBR | 220 | 250 | 21 | 20 | 2.600,65 |
| 188739 | SN 21 | NBR | 225 | 250 | 19 | 18 | 2.600,65 |
| 194672 | SN 21 | NBR | 270 | 300 | 23 | 22 | 3.992,22 |
| 188560 | SN 21 | NBR | 320 | 350 | 16 | 15 | 4.774,18 |

# Guarnizione stelo

PTFE + MOLLA V INOX

SNI 43

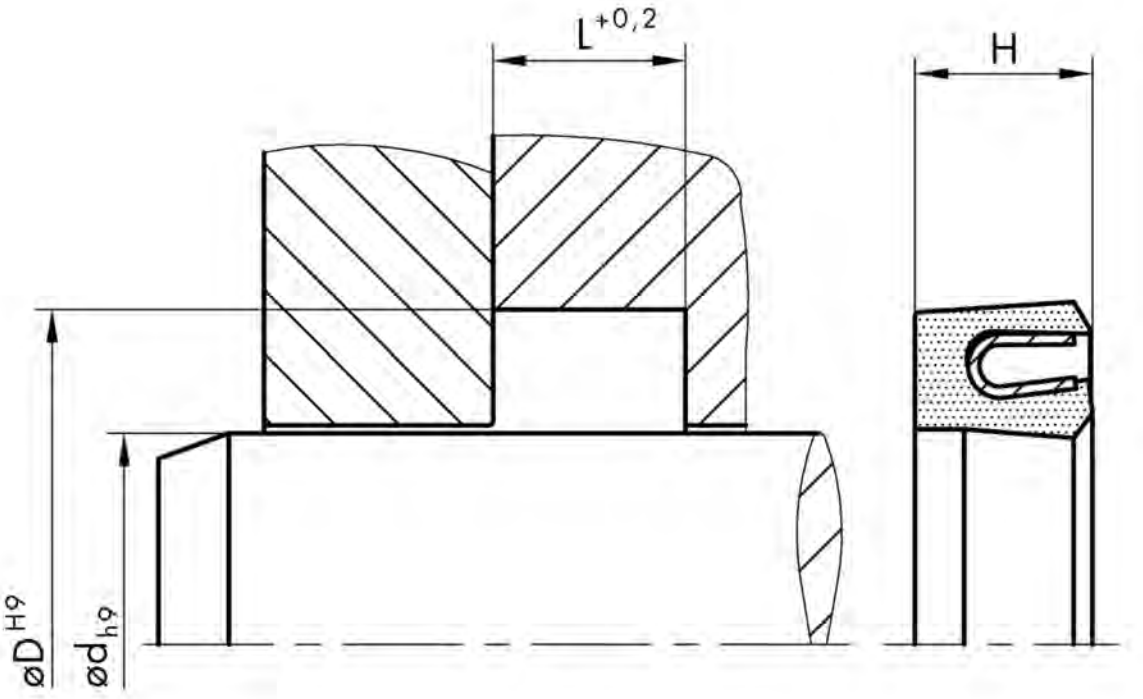
L+0,2
H
øD H9
ød h9

PTFE + MOLLA V INOX

# GUARNIZIONE STELO - SNI 43

| CODICE | TIPO | MAT. | d mm | D mm | L mm | LISTINO 5-2016 X 1 PCS € |
|---|---|---|---|---|---|---|
| 110470 | SNI 43 | PTFE | 5 | 7,9 | 2,4 | 24,46 |
| 110471 | SNI 43 | PTFE | 6 | 8,9 | 2,4 | 24,46 |
| 110472 | SNI 43 | PTFE | 8 | 10,9 | 2,4 | 24,46 |
| 110473 | SNI 43 | PTFE | 10 | 14,5 | 3,6 | 24,46 |
| 110474 | SNI 43 | PTFE | 12 | 16,5 | 3,6 | 24,47 |
| 110475 | SNI 43 | PTFE | 14 | 18,5 | 3,6 | 24,93 |
| 25508 | SNI 43 | PTFE | 15 | 19,5 | 3,6 | 28,22 |
| 110476 | SNI 43 | PTFE | 16 | 20,5 | 3,6 | 28,21 |
| 110477 | SNI 43 | PTFE | 18 | 22,5 | 3,6 | 28,78 |
| 46340 | SNI 43 | PTFE | 20 | 26,2 | 4,8 | 29,99 |
| 90763 | SNI 43 | PTFE | 22 | 28,2 | 4,8 | 30,00 |
| 115115 | SNI 43 | PTFE | 25 | 31,2 | 4,8 | 29,99 |
| 110481 | SNI 43 | PTFE | 28 | 34,2 | 4,8 | 32,34 |
| 110482 | SNI 43 | PTFE | 30 | 36,2 | 4,8 | 32,34 |
| 110483 | SNI 43 | PTFE | 32 | 38,2 | 4,8 | 32,34 |
| 110484 | SNI 43 | PTFE | 35 | 41,2 | 4,8 | 32,34 |
| 110486 | SNI 43 | PTFE | 40 | 49,4 | 7,1 | 41,43 |
| 110488 | SNI 43 | PTFE | 45 | 54,4 | 7,1 | 42,84 |
| 110489 | SNI 43 | PTFE | 48 | 57,4 | 7,1 | 52,40 |
| 110490 | SNI 43 | PTFE | 50 | 59,4 | 7,1 | 52,40 |
| 110492 | SNI 43 | PTFE | 55 | 64,4 | 7,1 | 59,33 |
| 110495 | SNI 43 | PTFE | 60 | 69,4 | 7,1 | 63,65 |
| 110497 | SNI 43 | PTFE | 65 | 74,4 | 7,1 | 66,37 |
| 123165 | SNI 43 | PTFE | 70 | 76,2 | 4,8 | 66,37 |
| 110498 | SNI 43 | PTFE | 70 | 79,4 | 7,1 | 66,37 |
| 110499 | SNI 43 | PTFE | 75 | 84,4 | 7,1 | 66,37 |
| 110500 | SNI 43 | PTFE | 80 | 89,4 | 7,1 | 78,18 |
| 110502 | SNI 43 | PTFE | 90 | 99,4 | 7,1 | 87,55 |
| 110504 | SNI 43 | PTFE | 100 | 109,4 | 7,1 | 89,52 |
| 110533 | SNI 43 | PTFE | 103 | 112,4 | 7,1 | 118,30 |
| 110508 | SNI 43 | PTFE | 120 | 132,2 | 9,5 | 129,27 |
| 110511 | SNI 43 | PTFE | 140 | 152,2 | 9,5 | 186,58 |
| 110540 | SNI 43 | PTFE | 155 | 167,2 | 9,5 | 225,82 |
| 110513 | SNI 43 | PTFE | 160 | 172,2 | 9,5 | 234,44 |
| 110534 | SNI 43 | PTFE | 165 | 177,2 | 9,5 | 247,47 |
| 110535 | SNI 43 | PTFE | 195 | 207,2 | 9,5 | 321,43 |
| 110517 | SNI 43 | PTFE | 200 | 212,2 | 9,5 | 373,55 |

# Guarnizione stelo

PTFE BRONZO/OR NBR

SPOR 130

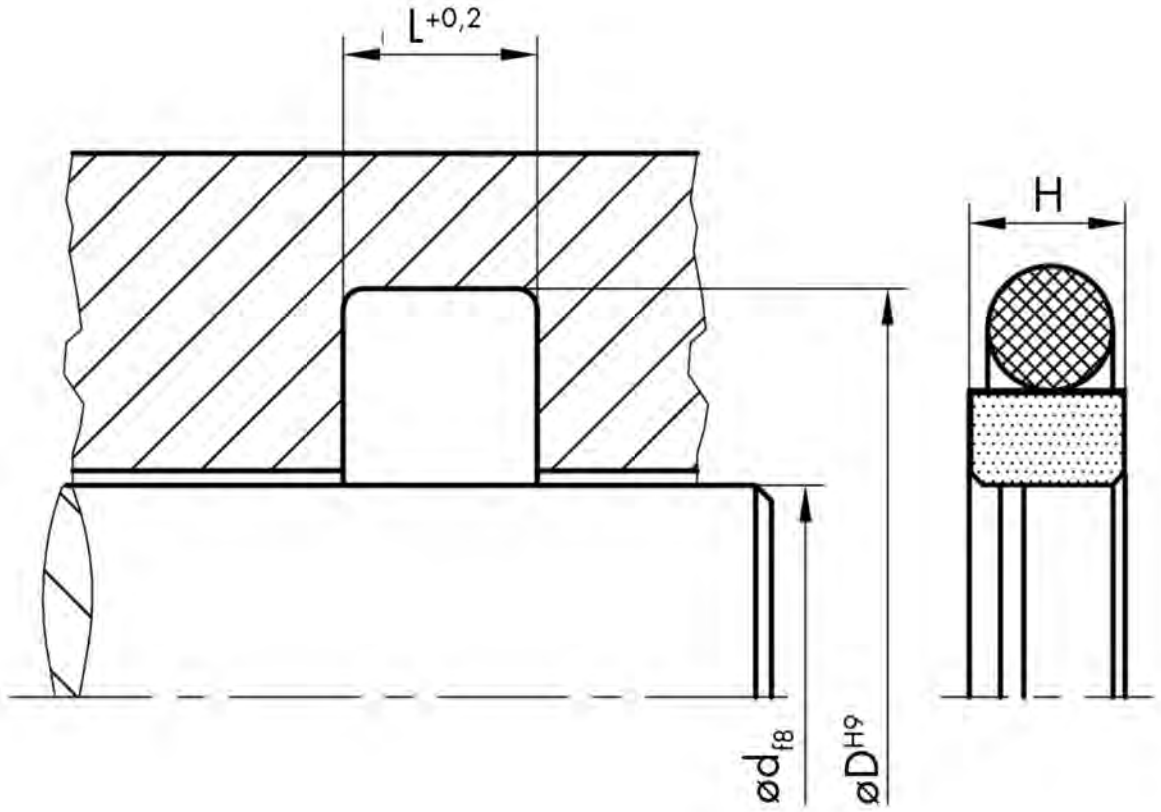
L+0,2
H
ød f8
øD H9

PTFE BRONZO/OR NBR

# GUARNIZIONE STELO - SPOR 130

| CODICE | TIPO | MAT. | d mm | D mm | L mm | LISTINO 5-2016 X 1 PCS € |
|---|---|---|---|---|---|---|
| 190016 | SPOR 130 | PTFE | 6 | 10,9 | 2,2 | 2,00 |
| 191717 | SPOR 130 | PTFE | 10 | 14,9 | 2,2 | 2,00 |
| 191718 | SPOR 130 | PTFE | 10 | 17,3 | 3,2 | 2,20 |
| 191719 | SPOR 130 | PTFE | 12 | 16,9 | 2,2 | 2,00 |
| 191721 | SPOR 130 | PTFE | 14 | 21,3 | 3,2 | 2,56 |
| 191723 | SPOR 130 | PTFE | 16 | 20,9 | 2,2 | 2,00 |
| 191724 | SPOR 130 | PTFE | 16 | 23,3 | 3,2 | 2,56 |
| 191725 | SPOR 130 | PTFE | 18 | 22,9 | 2,2 | 2,22 |
| 191726 | SPOR 130 | PTFE | 18 | 25,3 | 3,2 | 3,22 |
| 191727 | SPOR 130 | PTFE | 20 | 27,3 | 3,2 | 3,22 |
| 191730 | SPOR 130 | PTFE | 22 | 29,3 | 3,2 | 3,67 |
| 191731 | SPOR 130 | PTFE | 22 | 32,7 | 4,2 | 4,22 |
| 191732 | SPOR 130 | PTFE | 24 | 31,3 | 3,2 | 3,67 |
| 191733 | SPOR 130 | PTFE | 25 | 32,3 | 3,2 | 3,67 |
| 191734 | SPOR 130 | PTFE | 25 | 35,7 | 4,2 | 4,67 |
| 191735 | SPOR 130 | PTFE | 28 | 38,7 | 4,2 | 5,78 |
| 191736 | SPOR 130 | PTFE | 30 | 37,3 | 3,2 | 4,56 |
| 191738 | SPOR 130 | PTFE | 30 | 40,7 | 4,2 | 5,89 |
| 191739 | SPOR 130 | PTFE | 32 | 39,3 | 3,2 | 5,67 |
| 191740 | SPOR 130 | PTFE | 32 | 42,7 | 4,2 | 5,89 |
| 191742 | SPOR 130 | PTFE | 35 | 45,7 | 4,2 | 5,89 |
| 191746 | SPOR 130 | PTFE | 40 | 50,7 | 4,2 | 6,00 |
| 191748 | SPOR 130 | PTFE | 40 | 55,1 | 6,3 | 11,00 |
| 191749 | SPOR 130 | PTFE | 45 | 55,7 | 4,2 | 7,67 |
| 191752 | SPOR 130 | PTFE | 50 | 60,7 | 4,2 | 7,22 |
| 191756 | SPOR 130 | PTFE | 60 | 70,7 | 4,2 | 9,22 |
| 191757 | SPOR 130 | PTFE | 60 | 75,1 | 6,3 | 13,67 |
| 191760 | SPOR 130 | PTFE | 65 | 75,7 | 4,2 | 10,89 |
| 191761 | SPOR 130 | PTFE | 65 | 80,1 | 6,3 | 13,67 |
| 191762 | SPOR 130 | PTFE | 70 | 85,1 | 6,3 | 16,78 |
| 191763 | SPOR 130 | PTFE | 75 | 85,7 | 4,2 | 12,84 |
| 191765 | SPOR 130 | PTFE | 80 | 95,1 | 6,3 | 18,22 |
| 191767 | SPOR 130 | PTFE | 90 | 105,1 | 6,3 | 19,24 |
| 191769 | SPOR 130 | PTFE | 100 | 115,1 | 6,3 | 22,66 |
| 191771 | SPOR 130 | PTFE | 110 | 125,1 | 6,3 | 27,22 |
| 191772 | SPOR 130 | PTFE | 120 | 135,1 | 6,3 | 33,44 |
| 191774 | SPOR 130 | PTFE | 140 | 155,1 | 6,3 | 42,86 |
| 191777 | SPOR 130 | PTFE | 180 | 195,1 | 6,3 | 89,16 |

# Guarnizione stelo

PTFE BRONZO/OR NBR

SPOR 131

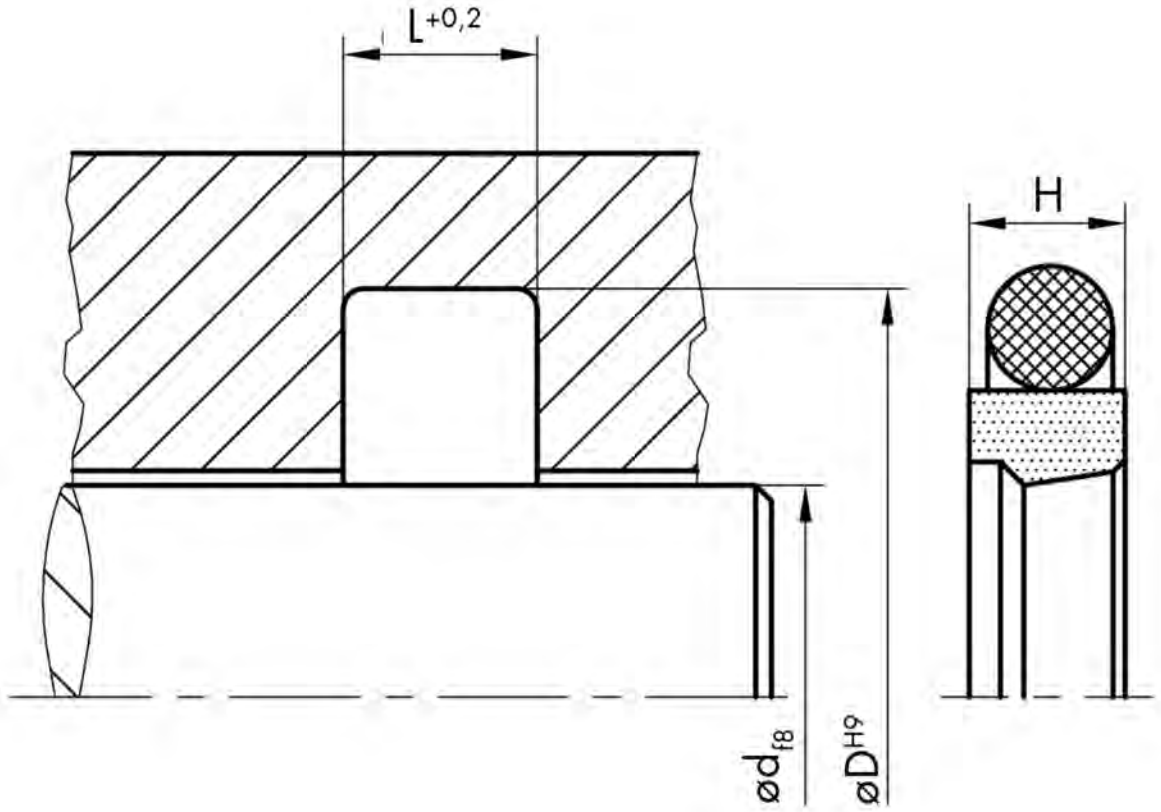
L+0,2
H
ød f8
øD H9

| CODICE | TIPO | MAT. | d mm | D mm | L mm | LISTINO 5-2016 X 1 PCS € |
|---|---|---|---|---|---|---|
| 191582 | SPOR 131 | PTFE | 4 | 8,9 | 2,2 | 2,88 |
| 191584 | SPOR 131 | PTFE | 6 | 10,9 | 2,2 | 2,88 |
| 191586 | SPOR 131 | PTFE | 8 | 12,9 | 2,2 | 3,24 |
| 191588 | SPOR 131 | PTFE | 10 | 14,9 | 2,2 | 3,24 |
| 191589 | SPOR 131 | PTFE | 10 | 17,3 | 3,2 | 3,57 |
| 191590 | SPOR 131 | PTFE | 12 | 16,9 | 2,2 | 3,24 |
| 191591 | SPOR 131 | PTFE | 12 | 19,3 | 3,2 | 3,08 |
| 191592 | SPOR 131 | PTFE | 14 | 18,9 | 2,2 | 3,61 |
| 191593 | SPOR 131 | PTFE | 14 | 21,3 | 3,2 | 3,96 |
| 191594 | SPOR 131 | PTFE | 16 | 20,9 | 2,2 | 3,61 |
| 191595 | SPOR 131 | PTFE | 16 | 23,3 | 3,2 | 3,96 |
| 191596 | SPOR 131 | PTFE | 18 | 22,9 | 2,2 | 4,07 |
| 191597 | SPOR 131 | PTFE | 18 | 25,3 | 3,2 | 4,48 |
| 191598 | SPOR 131 | PTFE | 20 | 27,3 | 3,2 | 4,07 |
| 191599 | SPOR 131 | PTFE | 20 | 30,7 | 4,2 | 4,48 |
| 191601 | SPOR 131 | PTFE | 22 | 29,3 | 3,2 | 4,25 |
| 191602 | SPOR 131 | PTFE | 22 | 32,7 | 4,2 | 4,67 |
| 191604 | SPOR 131 | PTFE | 25 | 32,3 | 3,2 | 4,17 |
| 191605 | SPOR 131 | PTFE | 25 | 35,7 | 4,2 | 4,58 |
| 191607 | SPOR 131 | PTFE | 28 | 35,3 | 3,2 | 4,17 |
| 191609 | SPOR 131 | PTFE | 28 | 38,7 | 4,2 | 4,54 |
| 191610 | SPOR 131 | PTFE | 30 | 37,3 | 3,2 | 4,54 |
| 191611 | SPOR 131 | PTFE | 30 | 40,7 | 4,2 | 4,82 |
| 191612 | SPOR 131 | PTFE | 32 | 39,3 | 3,2 | 6,17 |
| 191613 | SPOR 131 | PTFE | 32 | 42,7 | 4,2 | 6,79 |
| 191615 | SPOR 131 | PTFE | 35 | 42,3 | 3,2 | 5,20 |
| 191616 | SPOR 131 | PTFE | 35 | 45,7 | 4,2 | 5,54 |
| 191617 | SPOR 131 | PTFE | 36 | 43,3 | 3,2 | 6,17 |
| 191618 | SPOR 131 | PTFE | 36 | 46,7 | 4,2 | 6,79 |
| 191619 | SPOR 131 | PTFE | 38 | 48,7 | 4,2 | 9,17 |
| 191620 | SPOR 131 | PTFE | 38 | 53,1 | 6,3 | 10,09 |
| 191622 | SPOR 131 | PTFE | 40 | 50,7 | 4,2 | 8,25 |
| 191623 | SPOR 131 | PTFE | 40 | 55,1 | 6,3 | 9,13 |
| 191624 | SPOR 131 | PTFE | 42 | 52,7 | 4,2 | 9,72 |
| 191626 | SPOR 131 | PTFE | 42 | 57,1 | 6,3 | 10,70 |
| 191627 | SPOR 131 | PTFE | 45 | 55,7 | 4,2 | 9,98 |
| 191628 | SPOR 131 | PTFE | 45 | 60,1 | 6,3 | 10,98 |
| 191632 | SPOR 131 | PTFE | 50 | 60,7 | 4,2 | 10,89 |
| 191633 | SPOR 131 | PTFE | 50 | 65,1 | 6,3 | 11,98 |
| 191635 | SPOR 131 | PTFE | 55 | 65,7 | 4,2 | 14,92 |
| 191636 | SPOR 131 | PTFE | 55 | 70,1 | 6,3 | 16,41 |
| 191637 | SPOR 131 | PTFE | 56 | 66,7 | 4,2 | 12,01 |
| 191638 | SPOR 131 | PTFE | 56 | 71,1 | 6,3 | 13,50 |
| 191640 | SPOR 131 | PTFE | 60 | 70,7 | 4,2 | 14,31 |
| 191642 | SPOR 131 | PTFE | 60 | 75,1 | 6,3 | 15,74 |
| 191645 | SPOR 131 | PTFE | 63 | 73,7 | 4,2 | 16,02 |
| 191646 | SPOR 131 | PTFE | 63 | 78,1 | 6,3 | 17,62 |
| 191648 | SPOR 131 | PTFE | 65 | 80,1 | 6,3 | 19,38 |
| 191650 | SPOR 131 | PTFE | 70 | 80,7 | 4,2 | 20,26 |

# GUARNIZIONE STELO - SPOR 131

PTFE BRONZO/OR NBR

| CODICE | TIPO | MAT. | d mm | D mm | L mm | LISTINO 5-2016 X 1 PCS € |
|---|---|---|---|---|---|---|
| 191651 | SPOR 131 | PTFE | 70 | 85,1 | 6,3 | 22,28 |
| 191654 | SPOR 131 | PTFE | 75 | 90,1 | 6,3 | 22,28 |
| 191656 | SPOR 131 | PTFE | 80 | 90,7 | 4,2 | 23,39 |
| 191657 | SPOR 131 | PTFE | 80 | 95,1 | 6,3 | 24,09 |
| 191659 | SPOR 131 | PTFE | 85 | 100,1 | 6,3 | 24,09 |
| 191661 | SPOR 131 | PTFE | 90 | 100,7 | 4,2 | 25,30 |
| 191662 | SPOR 131 | PTFE | 90 | 105,1 | 6,3 | 26,05 |
| 191664 | SPOR 131 | PTFE | 95 | 110,1 | 6,3 | 26,05 |
| 191666 | SPOR 131 | PTFE | 100 | 115,1 | 6,3 | 26,92 |
| 191667 | SPOR 131 | PTFE | 105 | 120,1 | 6,3 | 27,38 |
| 191668 | SPOR 131 | PTFE | 110 | 125,1 | 6,3 | 28,87 |
| 191669 | SPOR 131 | PTFE | 120 | 135,1 | 6,3 | 30,45 |
| 191672 | SPOR 131 | PTFE | 130 | 145,1 | 6,3 | 35,07 |
| 191674 | SPOR 131 | PTFE | 140 | 155,1 | 6,3 | 38,92 |
| 191676 | SPOR 131 | PTFE | 150 | 165,1 | 6,3 | 47,95 |
| 191677 | SPOR 131 | PTFE | 160 | 175,1 | 6,3 | 53,48 |
| 191679 | SPOR 131 | PTFE | 170 | 185,1 | 6,3 | 56,46 |
| 191680 | SPOR 131 | PTFE | 180 | 195,1 | 6,3 | 63,31 |
| 191682 | SPOR 131 | PTFE | 190 | 205,1 | 6,3 | 71,97 |
| 191684 | SPOR 131 | PTFE | 200 | 220,5 | 8,1 | 81,14 |
| 191689 | SPOR 131 | PTFE | 220 | 240,5 | 8,1 | 119,92 |
| 191693 | SPOR 131 | PTFE | 250 | 270,5 | 8,1 | 146,68 |
| 191695 | SPOR 131 | PTFE | 280 | 304 | 8,1 | 152,86 |
| 191696 | SPOR 131 | PTFE | 300 | 324 | 8,1 | 166,73 |
| 191698 | SPOR 131 | PTFE | 320 | 344 | 8,1 | 181,73 |

# Guarnizione stelo

TPU

SN 25

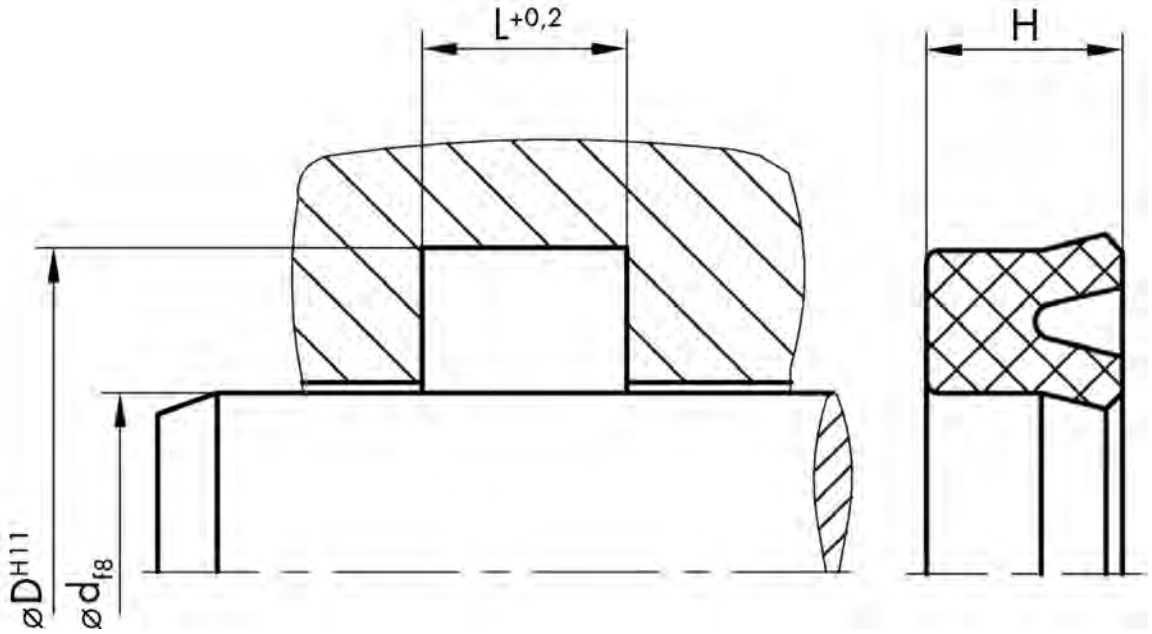
L+0,2
H
øD H11
ød f8

# GUARNIZIONE STELO - SN 25

| CODICE | TIPO | MAT. | d mm | D mm | L mm | H mm | LISTINO 5-2016 X 100 PCS € |
|---|---|---|---|---|---|---|---|
| 65467 | SN 25 | TPU | 3 | 9 | 5 | 4,5 | 133,16 |
| 14434 | SN 25 | TPU | 4 | 10 | 4,5 | 4 | 144,45 |
| 170974 | SN 25 | TPU | 4 | 10 | 5 | 4 | 144,45 |
| 14645 | SN 25 | TPU | 4 | 10 | 5,5 | 4,5 | 144,45 |
| 65468 | SN 25 | TPU | 4,5 | 11 | 5,5 | 5 | 144,45 |
| 14646 | SN 25 | TPU | 4,5 | 12,5 | 5 | 4,5 | 144,45 |
| 76236 | SN 25 | TPU | 5 | 10 | 6 | 5 | 144,45 |
| 170983 | SN 25 | TPU | 5 | 11 | 6 | 5 | 144,45 |
| 170985 | SN 25 | TPU | 5 | 11 | 8 | 7 | 144,45 |
| 14435 | SN 25 | TPU | 5 | 12 | 5,5 | 5 | 144,45 |
| 14436 | SN 25 | TPU | 5 | 12 | 6,5 | 6 | 144,45 |
| 170989 | SN 25 | TPU | 5 | 12 | 7 | 6,2 | 144,45 |
| 170991 | SN 25 | TPU | 5 | 12,7 | 9 | 8,5 | 144,45 |
| 170993 | SN 25 | TPU | 5 | 17 | 10 | 9 | 144,45 |
| 170995 | SN 25 | TPU | 6 | 12 | 4,5 | 3,5 | 144,45 |
| 66172 | SN 25 | TPU | 6 | 12 | 5 | 4,5 | 144,45 |
| 14647 | SN 25 | TPU | 6 | 12 | 5 | 4 | 144,45 |
| 66173 | SN 25 | TPU | 6 | 12 | 6 | 5 | 144,45 |
| 14648 | SN 25 | TPU | 6 | 12 | 6,5 | 5,5 | 144,45 |
| 14649 | SN 25 | TPU | 6 | 12 | 7 | 6 | 144,45 |
| 171002 | SN 25 | TPU | 6 | 12 | 8 | 7 | 144,45 |
| 171004 | SN 25 | TPU | 6 | 12,7 | 6,5 | 6 | 144,45 |
| 67783 | SN 25 | TPU | 6 | 13 | 9 | 8 | 158,00 |
| 77410 | SN 25 | TPU | 6 | 14 | 7 | 6 | 158,00 |
| 66203 | SN 25 | TPU | 6 | 15 | 5 | 4 | 158,00 |
| 171009 | SN 25 | TPU | 6 | 15 | 6 | 5 | 158,00 |
| 14437 | SN 25 | TPU | 6 | 15 | 9 | 8 | 158,00 |
| 171012 | SN 25 | TPU | 6 | 16 | 7 | 6 | 158,00 |
| 14442 | SN 25 | TPU | 10 | 16 | 5 | 4,5 | 158,00 |
| 168742 | SN 25 | TPU | 10 | 16 | 6 | 5 | 158,00 |
| 14443 | SN 25 | TPU | 10 | 16 | 6,5 | 6 | 158,00 |
| 14656 | SN 25 | TPU | 10 | 18 | 6 | 5 | 182,82 |
| 14444 | SN 25 | TPU | 10 | 18 | 6 | 5,5 | 182,82 |
| 14445 | SN 25 | TPU | 10 | 18 | 7 | 6 | 182,82 |
| 14657 | SN 25 | TPU | 10 | 18 | 9 | 8 | 182,82 |
| 67786 | SN 25 | TPU | 10 | 20 | 7 | 6 | 205,38 |
| 14446 | SN 25 | TPU | 10 | 20 | 9 | 8 | 205,38 |
| 14658 | SN 25 | TPU | 10 | 22 | 7 | 6 | 205,38 |
| 14447 | SN 25 | TPU | 10 | 22 | 9 | 8 | 205,38 |
| 168827 | SN 25 | TPU | 10 | 25 | 11 | 10 | 230,23 |
| 168745 | SN 25 | TPU | 11 | 17 | 5 | 4 | 182,82 |
| 168789 | SN 25 | TPU | 11 | 20,5 | 7 | 6,5 | 205,38 |
| 64615 | SN 25 | TPU | 12 | 18 | 5 | 4 | 182,82 |
| 168754 | SN 25 | TPU | 12 | 18 | 5,5 | 5 | 182,82 |
| 14449 | SN 25 | TPU | 12 | 18 | 6 | 5 | 182,82 |
| 14450 | SN 25 | TPU | 12 | 18 | 7 | 6 | 182,82 |
| 66207 | SN 25 | TPU | 12 | 20 | 6 | 5 | 205,38 |
| 76119 | SN 25 | TPU | 12 | 20 | 8 | 7 | 205,38 |

# GUARNIZIONE STELO - SN 25

TPU

| CODICE | TIPO | MAT. | d mm | D mm | L mm | H mm | LISTINO 5-2016 X 100 PCS € |
|---|---|---|---|---|---|---|---|
| 14451 | SN 25 | TPU | 12 | 20 | 9 | 8 | 205,38 |
| 14660 | SN 25 | TPU | 12 | 22 | 6 | 5 | 205,38 |
| 14661 | SN 25 | TPU | 12 | 22 | 8 | 7 | 205,38 |
| 14452 | SN 25 | TPU | 12 | 22 | 9 | 8 | 205,38 |
| 67796 | SN 25 | TPU | 12 | 24 | 7 | 6 | 218,93 |
| 14662 | SN 25 | TPU | 12 | 24 | 9 | 8 | 218,93 |
| 14663 | SN 25 | TPU | 12 | 24 | 10 | 9 | 218,93 |
| 168814 | SN 25 | TPU | 12 | 24 | 11 | 10 | 218,93 |
| 14664 | SN 25 | TPU | 12 | 25 | 9 | 8 | 230,22 |
| 14453 | SN 25 | TPU | 12 | 25 | 11 | 10 | 230,22 |
| 168770 | SN 25 | TPU | 12,7 | 19,05 | 5,56 | 3,96 | 218,93 |
| 162813 | SN 25 | TPU | 12,7 | 22,22 | 0 | 5,25 | 218,94 |
| 66807 | SN 25 | TPU | 12,7 | 25,4 | 7,14 | 6,35 | 241,51 |
| 67794 | SN 25 | TPU | 14 | 20 | 5 | 4 | 205,38 |
| 14735 | SN 25 | TPU | 14 | 20 | 5,3 | 4,8 | 205,38 |
| 168785 | SN 25 | TPU | 14 | 20 | 7 | 6 | 205,38 |
| 124729 | SN 25 | TPU | 14 | 22 | 5 | 4,5 | 205,38 |
| 14665 | SN 25 | TPU | 14 | 22 | 7 | 6 | 205,38 |
| 14666 | SN 25 | TPU | 14 | 22 | 9 | 8 | 205,38 |
| 14455 | SN 25 | TPU | 14 | 24 | 9 | 8 | 218,93 |
| 67798 | SN 25 | TPU | 14 | 26 | 9 | 8 | 241,51 |
| 168868 | SN 25 | TPU | 14 | 28 | 11 | 10 | 241,51 |
| 14727 | SN 25 | TPU | 15 | 22 | 5 | 4 | 205,38 |
| 84088 | SN 25 | TPU | 15 | 22 | 8 | 7 | 205,38 |
| 80218 | SN 25 | TPU | 15 | 25 | 6 | 5 | 230,22 |
| 14456 | SN 25 | TPU | 15 | 25 | 9 | 8 | 230,22 |
| 14457 | SN 25 | TPU | 15 | 25 | 11 | 10 | 230,22 |
| 14667 | SN 25 | TPU | 15 | 27 | 7 | 6 | 241,51 |
| 168870 | SN 25 | TPU | 15 | 28 | 9 | 8 | 241,51 |
| 14458 | SN 25 | TPU | 15 | 28 | 11 | 10 | 241,51 |
| 168888 | SN 25 | TPU | 15 | 30 | 7 | 6 | 266,32 |
| 67790 | SN 25 | TPU | 15 | 30 | 9 | 8 | 266,33 |
| 79633 | SN 25 | TPU | 15,87 | 25,4 | 7,14 | 8,15 | 241,51 |
| 79651 | SN 25 | TPU | 15,87 | 28,57 | 6,35 | 6,85 | 266,32 |
| 14459 | SN 25 | TPU | 16 | 22 | 4,5 | 4 | 205,38 |
| 14668 | SN 25 | TPU | 16 | 22 | 5,5 | 5 | 205,38 |
| 192768 | SN 25 | TPU | 16 | 24 | 6 | 5 | 218,93 |
| 14643 | SN 25 | TPU | 16 | 24 | 10 | 9 | 218,93 |
| 14669 | SN 25 | TPU | 16 | 26 | 6 | 5 | 241,51 |
| 168848 | SN 25 | TPU | 16 | 26 | 7 | 6 | 241,51 |
| 14461 | SN 25 | TPU | 16 | 26 | 9 | 8 | 241,51 |
| 14462 | SN 25 | TPU | 16 | 26 | 11 | 10 | 241,51 |
| 14640 | SN 25 | TPU | 16 | 28 | 7 | 6 | 241,51 |
| 14737 | SN 25 | TPU | 16 | 32 | 9 | 8 | 266,33 |
| 14463 | SN 25 | TPU | 17 | 25 | 11 | 10 | 230,22 |
| 168908 | SN 25 | TPU | 17 | 32 | 11 | 10 | 266,32 |
| 14670 | SN 25 | TPU | 18 | 25 | 5,5 | 5 | 230,22 |
| 80568 | SN 25 | TPU | 18 | 25 | 7 | 6 | 230,22 |
| 66244 | SN 25 | TPU | 18 | 26 | 6 | 5 | 241,51 |

# GUARNIZIONE STELO - SN 25

| CODICE | TIPO | MAT. | d mm | D mm | L mm | H mm | LISTINO 5-2016 X 100 PCS € |
|---|---|---|---|---|---|---|---|
| 14671 | SN 25 | TPU | 18 | 26 | 7,5 | 6,5 | 241,51 |
| 14464 | SN 25 | TPU | 18 | 26 | 9 | 8 | 241,51 |
| 14672 | SN 25 | TPU | 18 | 26 | 9,5 | 8,5 | 241,51 |
| 14465 | SN 25 | TPU | 18 | 28 | 9 | 8 | 230,22 |
| 14673 | SN 25 | TPU | 18 | 30 | 9 | 8 | 266,33 |
| 168894 | SN 25 | TPU | 18 | 30 | 11 | 10 | 266,32 |
| 168910 | SN 25 | TPU | 18 | 32 | 8 | 7 | 266,32 |
| 67800 | SN 25 | TPU | 18 | 34 | 9 | 8 | 279,88 |
| 84316 | SN 25 | TPU | 18 | 35 | 9 | 8 | 279,88 |
| 14641 | SN 25 | TPU | 19 | 25 | 7 | 6 | 230,22 |
| 67787 | SN 25 | TPU | 20 | 26 | 5 | 4 | 241,51 |
| 14469 | SN 25 | TPU | 20 | 28 | 5 | 4 | 230,22 |
| 192774 | SN 25 | TPU | 20 | 28 | 6 | 5 | 230,22 |
| 14470 | SN 25 | TPU | 20 | 28 | 9 | 8 | 230,22 |
| 168886 | SN 25 | TPU | 20 | 29 | 5,5 | 5 | 266,32 |
| 66254 | SN 25 | TPU | 20 | 30 | 7 | 6 | 266,33 |
| 14471 | SN 25 | TPU | 20 | 30 | 9 | 8 | 266,33 |
| 14416 | SN 25 | TPU | 20 | 30 | 11 | 10 | 266,33 |
| 168912 | SN 25 | TPU | 20 | 32 | 6 | 5 | 266,32 |
| 14675 | SN 25 | TPU | 20 | 32 | 8,5 | 7,5 | 266,33 |
| 14472 | SN 25 | TPU | 20 | 32 | 9 | 8 | 266,33 |
| 67802 | SN 25 | TPU | 20 | 35 | 11 | 10 | 279,88 |
| 14473 | SN 25 | TPU | 20 | 35 | 13 | 12 | 279,88 |
| 168961 | SN 25 | TPU | 20 | 36 | 9 | 8 | 291,16 |
| 79721 | SN 25 | TPU | 20 | 36 | 13 | 12 | 291,16 |
| 168991 | SN 25 | TPU | 20 | 39 | 11 | 10,5 | 315,98 |
| 14676 | SN 25 | TPU | 20 | 40 | 11 | 10 | 315,98 |
| 14475 | SN 25 | TPU | 20 | 40 | 13 | 12 | 315,98 |
| 14476 | SN 25 | TPU | 21 | 37 | 13 | 12 | 291,15 |
| 14677 | SN 25 | TPU | 22 | 28 | 9 | 8 | 241,51 |
| 45725 | SN 25 | TPU | 22 | 30 | 5 | 4 | 266,32 |
| 168900 | SN 25 | TPU | 22 | 30 | 6 | 5 | 266,32 |
| 14678 | SN 25 | TPU | 22 | 30 | 7 | 6 | 266,32 |
| 14477 | SN 25 | TPU | 22 | 30 | 7,5 | 7 | 266,32 |
| 14478 | SN 25 | TPU | 22 | 30 | 11 | 10 | 266,32 |
| 56369 | SN 25 | TPU | 22 | 32 | 6 | 5 | 266,32 |
| 14479 | SN 25 | TPU | 22 | 32 | 9 | 8 | 266,32 |
| 14480 | SN 25 | TPU | 22 | 32 | 11 | 10 | 266,32 |
| 14481 | SN 25 | TPU | 22 | 35 | 11 | 10 | 279,88 |
| 67811 | SN 25 | TPU | 22 | 40 | 11 | 10 | 315,98 |
| 168922 | SN 25 | TPU | 24 | 32 | 5 | 4 | 266,32 |
| 14679 | SN 25 | TPU | 24 | 32 | 7,5 | 7 | 266,32 |
| 168925 | SN 25 | TPU | 24 | 32 | 8 | 7,5 | 266,32 |
| 14482 | SN 25 | TPU | 24 | 40 | 9 | 8 | 315,98 |
| 78775 | SN 25 | TPU | 25 | 32 | 5 | 4 | 266,32 |
| 29538 | SN 25 | TPU | 25 | 33 | 5 | 4 | 266,32 |
| 192776 | SN 25 | TPU | 25 | 33 | 6 | 5 | 266,32 |
| 35919 | SN 25 | TPU | 25 | 33 | 7 | 6 | 266,32 |
| 14483 | SN 25 | TPU | 25 | 33 | 7,5 | 7 | 266,32 |

# GUARNIZIONE STELO - SN 25

TPU

| CODICE | TIPO | MAT. | d mm | D mm | L mm | H mm | LISTINO 5-2016 X 100 PCS € |
|---|---|---|---|---|---|---|---|
| 79724 | SN 25 | TPU | 25 | 33 | 9 | 8 | 266,32 |
| 14644 | SN 25 | TPU | 25 | 35 | 5,5 | 5 | 279,88 |
| 27567 | SN 25 | TPU | 25 | 35 | 7 | 6 | 279,88 |
| 117411 | SN 25 | TPU | 25 | 35 | 8 | 7 | 279,88 |
| 14484 | SN 25 | TPU | 25 | 35 | 9 | 8 | 279,88 |
| 14485 | SN 25 | TPU | 25 | 35 | 11 | 10 | 279,88 |
| 168972 | SN 25 | TPU | 25 | 37 | 8 | 7 | 291,16 |
| 88170 | SN 25 | TPU | 25 | 38 | 10,5 | 9,5 | 291,15 |
| 14486 | SN 25 | TPU | 25 | 38 | 11 | 10 | 291,15 |
| 14487 | SN 25 | TPU | 25 | 40 | 11 | 10 | 315,98 |
| 169048 | SN 25 | TPU | 25 | 45 | 11 | 10 | 376,92 |
| 66815 | SN 25 | TPU | 25,4 | 38,1 | 7,14 | 6,35 | 315,98 |
| 77386 | SN 25 | TPU | 26 | 38 | 9 | 8 | 291,15 |
| 117413 | SN 25 | TPU | 27 | 35 | 4,5 | 4 | 279,88 |
| 14490 | SN 25 | TPU | 27 | 36 | 7 | 6 | 291,15 |
| 168979 | SN 25 | TPU | 27 | 38 | 7 | 6 | 291,16 |
| 14680 | SN 25 | TPU | 28 | 35 | 5,5 | 5 | 279,88 |
| 66291 | SN 25 | TPU | 28 | 35,5 | 6 | 5 | 291,15 |
| 29540 | SN 25 | TPU | 28 | 36 | 5 | 4 | 291,15 |
| 14491 | SN 25 | TPU | 28 | 36 | 6 | 5 | 291,15 |
| 168968 | SN 25 | TPU | 28 | 36 | 7 | 6 | 291,16 |
| 14681 | SN 25 | TPU | 28 | 36 | 7,5 | 6,5 | 291,15 |
| 14492 | SN 25 | TPU | 28 | 38 | 9 | 8 | 291,15 |
| 14682 | SN 25 | TPU | 28 | 38 | 11 | 10 | 291,15 |
| 67812 | SN 25 | TPU | 28 | 40 | 9 | 8 | 315,98 |
| 14493 | SN 25 | TPU | 28 | 40 | 11 | 10 | 315,98 |
| 169037 | SN 25 | TPU | 28 | 43 | 11 | 10 | 315,99 |
| 14494 | SN 25 | TPU | 28 | 44 | 9 | 8 | 315,98 |
| 14495 | SN 25 | TPU | 30 | 37 | 7 | 6 | 291,15 |
| 168983 | SN 25 | TPU | 30 | 38 | 5 | 4 | 291,16 |
| 67810 | SN 25 | TPU | 30 | 38 | 6 | 5 | 291,15 |
| 14683 | SN 25 | TPU | 30 | 38 | 6,5 | 6 | 291,15 |
| 14496 | SN 25 | TPU | 30 | 38 | 8 | 7 | 291,15 |
| 14684 | SN 25 | TPU | 30 | 40 | 5,5 | 4,5 | 315,99 |
| 66298 | SN 25 | TPU | 30 | 40 | 6,5 | 5,5 | 315,98 |
| 192769 | SN 25 | TPU | 30 | 40 | 7 | 6 | 315,98 |
| 67817 | SN 25 | TPU | 30 | 40 | 7,5 | 6,5 | 315,98 |
| 79728 | SN 25 | TPU | 30 | 40 | 8 | 7 | 315,98 |
| 7162 | SN 25 | TPU | 30 | 40 | 9 | 8 | 315,98 |
| 14413 | SN 25 | TPU | 30 | 40 | 11 | 10 | 315,98 |
| 14685 | SN 25 | TPU | 30 | 42 | 10 | 9 | 315,98 |
| 14423 | SN 25 | TPU | 30 | 42 | 11 | 10 | 315,98 |
| 66302 | SN 25 | TPU | 30 | 43 | 7,5 | 6,5 | 315,99 |
| 66303 | SN 25 | TPU | 30 | 45 | 10 | 9 | 376,91 |
| 14497 | SN 25 | TPU | 30 | 45 | 11 | 10 | 376,91 |
| 14498 | SN 25 | TPU | 30 | 50 | 11 | 10 | 404,11 |
| 14499 | SN 25 | TPU | 30 | 50 | 13 | 12 | 404,11 |
| 46581 | SN 25 | TPU | 31,75 | 41,27 | 8,72 | 7,93 | 315,99 |
| 66823 | SN 25 | TPU | 31,75 | 44,45 | 6,35 | 0 | 376,92 |

# GUARNIZIONE STELO - SN 25

| CODICE | TIPO | MAT. | d mm | D mm | L mm | H mm | LISTINO 5-2016 X 100 PCS € |
|---|---|---|---|---|---|---|---|
| 71679 | SN 25 | TPU | 32 | 40 | 5 | 4 | 315,98 |
| 117417 | SN 25 | TPU | 32 | 40 | 6 | 5 | 315,98 |
| 14686 | SN 25 | TPU | 32 | 40 | 6,5 | 5,5 | 315,98 |
| 66311 | SN 25 | TPU | 32 | 40 | 7 | 6 | 315,98 |
| 14500 | SN 25 | TPU | 32 | 40 | 8 | 7 | 315,98 |
| 14501 | SN 25 | TPU | 32 | 40 | 9 | 8 | 315,98 |
| 117418 | SN 25 | TPU | 32 | 42 | 7 | 6 | 315,98 |
| 14502 | SN 25 | TPU | 32 | 42 | 11 | 10 | 315,98 |
| 14503 | SN 25 | TPU | 32 | 45 | 11 | 10 | 376,91 |
| 36681 | SN 25 | TPU | 32 | 47 | 11 | 10 | 399,50 |
| 67815 | SN 25 | TPU | 32 | 50 | 11 | 10 | 404,11 |
| 24850 | SN 25 | TPU | 32 | 50 | 13 | 12 | 404,11 |
| 35982 | SN 25 | TPU | 33 | 43 | 11 | 10 | 315,98 |
| 169053 | SN 25 | TPU | 34 | 45 | 8 | 7 | 376,92 |
| 14688 | SN 25 | TPU | 34 | 45 | 10 | 9 | 376,91 |
| 169084 | SN 25 | TPU | 34 | 50 | 15 | 14 | 404,11 |
| 66829 | SN 25 | TPU | 34,92 | 50,8 | 12,7 | 0 | 424,31 |
| 79732 | SN 25 | TPU | 35 | 43 | 7 | 6 | 315,98 |
| 14505 | SN 25 | TPU | 35 | 43 | 8 | 7 | 315,98 |
| 66322 | SN 25 | TPU | 35 | 45 | 7 | 6 | 376,91 |
| 14639 | SN 25 | TPU | 35 | 45 | 9 | 8 | 376,91 |
| 14506 | SN 25 | TPU | 35 | 45 | 11 | 10 | 376,91 |
| 67813 | SN 25 | TPU | 35 | 47 | 11 | 10 | 399,50 |
| 14507 | SN 25 | TPU | 35 | 48 | 11 | 10 | 399,50 |
| 67816 | SN 25 | TPU | 35 | 50 | 9 | 8 | 404,11 |
| 14508 | SN 25 | TPU | 35 | 50 | 11 | 10 | 404,11 |
| 14741 | SN 25 | TPU | 35 | 55 | 11 | 10 | 404,11 |
| 14509 | SN 25 | TPU | 35 | 55 | 13 | 12 | 404,11 |
| 66330 | SN 25 | TPU | 35,5 | 45 | 7 | 6 | 376,91 |
| 62958 | SN 25 | TPU | 36 | 44 | 5 | 4 | 315,98 |
| 89985 | SN 25 | TPU | 36 | 44 | 6,5 | 5,7 | 315,98 |
| 14689 | SN 25 | TPU | 36 | 46 | 8 | 7 | 376,92 |
| 36438 | SN 25 | TPU | 36 | 46 | 11 | 10 | 376,92 |
| 169090 | SN 25 | TPU | 36 | 50 | 9 | 8 | 404,11 |
| 14690 | SN 25 | TPU | 36 | 70 | 11 | 10 | 471,72 |
| 14510 | SN 25 | TPU | 38 | 45 | 7 | 6 | 376,91 |
| 67820 | SN 25 | TPU | 38 | 45 | 9 | 8 | 376,91 |
| 14692 | SN 25 | TPU | 38 | 46 | 7,5 | 6,5 | 376,91 |
| 169094 | SN 25 | TPU | 38 | 50 | 7 | 6 | 404,11 |
| 14693 | SN 25 | TPU | 38 | 50 | 10 | 9 | 381,89 |
| 14512 | SN 25 | TPU | 38 | 50 | 11 | 10 | 381,89 |
| 14513 | SN 25 | TPU | 38 | 55 | 11 | 10 | 404,11 |
| 14742 | SN 25 | TPU | 38 | 58 | 11 | 10 | 424,31 |
| 162623 | SN 25 | TPU | 38,1 | 47,62 | 8,72 | 7,93 | 399,50 |
| 66835 | SN 25 | TPU | 38,1 | 57,15 | 11,91 | 0 | 424,31 |
| 66343 | SN 25 | TPU | 40 | 48 | 9 | 8 | 399,50 |
| 22665 | SN 25 | TPU | 40 | 48 | 12 | 11 | 399,50 |
| 67822 | SN 25 | TPU | 40 | 50 | 6 | 5 | 381,89 |
| 66345 | SN 25 | TPU | 40 | 50 | 7 | 6 | 381,89 |

# GUARNIZIONE STELO - SN 25

TPU

| CODICE | TIPO | MAT. | d mm | D mm | L mm | H mm | LISTINO 5-2016 X 100 PCS € |
|---|---|---|---|---|---|---|---|
| 14694 | SN 25 | TPU | 40 | 50 | 7,5 | 6,5 | 381,89 |
| 66346 | SN 25 | TPU | 40 | 50 | 8 | 7 | 381,89 |
| 66748 | SN 25 | TPU | 40 | 50 | 9 | 8 | 381,89 |
| 14514 | SN 25 | TPU | 40 | 50 | 11 | 10 | 381,89 |
| 14415 | SN 25 | TPU | 40 | 55 | 11 | 10 | 404,11 |
| 169135 | SN 25 | TPU | 40 | 56 | 9 | 8 | 424,31 |
| 14743 | SN 25 | TPU | 40 | 56 | 11 | 10 | 424,31 |
| 14516 | SN 25 | TPU | 40 | 60 | 11 | 10 | 435,60 |
| 14517 | SN 25 | TPU | 40 | 60 | 13 | 12 | 435,60 |
| 14695 | SN 25 | TPU | 40 | 60 | 14 | 13 | 435,60 |
| 14518 | SN 25 | TPU | 40 | 60 | 19 | 18 | 435,60 |
| 169186 | SN 25 | TPU | 40 | 65 | 11 | 10 | 449,15 |
| 14519 | SN 25 | TPU | 40 | 65 | 13 | 12 | 449,15 |
| 169217 | SN 25 | TPU | 40 | 70 | 16 | 15 | 471,72 |
| 169251 | SN 25 | TPU | 40 | 75 | 11 | 10,5 | 496,54 |
| 66836 | SN 25 | TPU | 41,27 | 57,15 | 11,11 | 0 | 424,31 |
| 14520 | SN 25 | TPU | 42 | 50 | 9 | 8 | 381,89 |
| 171035 | SN 25 | TPU | 42 | 52 | 7 | 6 | 381,89 |
| 169116 | SN 25 | TPU | 42 | 52 | 10 | 9 | 381,89 |
| 14521 | SN 25 | TPU | 42 | 52 | 11 | 10 | 381,89 |
| 14729 | SN 25 | TPU | 42 | 62 | 13 | 12 | 435,60 |
| 66834 | SN 25 | TPU | 44,45 | 53,97 | 9,52 | 0 | 424,31 |
| 89986 | SN 25 | TPU | 45 | 53 | 6,5 | 5,7 | 381,89 |
| 67826 | SN 25 | TPU | 45 | 53 | 9 | 8 | 381,89 |
| 20958 | SN 25 | TPU | 45 | 53 | 13 | 12 | 381,89 |
| 29542 | SN 25 | TPU | 45 | 55 | 6 | 5 | 404,11 |
| 66362 | SN 25 | TPU | 45 | 55 | 7 | 6 | 404,11 |
| 14697 | SN 25 | TPU | 45 | 55 | 7,5 | 6,5 | 404,11 |
| 14522 | SN 25 | TPU | 45 | 55 | 11 | 10 | 404,11 |
| 66364 | SN 25 | TPU | 45 | 56 | 8 | 7 | 424,31 |
| 152586 | SN 25 | TPU | 45 | 57,7 | 10,5 | 9,5 | 424,31 |
| 14523 | SN 25 | TPU | 45 | 60 | 11 | 10 | 435,60 |
| 14698 | SN 25 | TPU | 45 | 63 | 11 | 10 | 435,60 |
| 14524 | SN 25 | TPU | 45 | 63 | 13 | 12 | 435,60 |
| 14699 | SN 25 | TPU | 45 | 65 | 11 | 10 | 449,15 |
| 14525 | SN 25 | TPU | 45 | 65 | 13 | 12 | 449,15 |
| 169219 | SN 25 | TPU | 45 | 70 | 13 | 12 | 471,72 |
| 66372 | SN 25 | TPU | 45 | 75 | 15 | 0 | 496,54 |
| 117422 | SN 25 | TPU | 47 | 65 | 12 | 0 | 449,14 |
| 66841 | SN 25 | TPU | 47,62 | 63,5 | 7,93 | 0 | 449,14 |
| 14526 | SN 25 | TPU | 48 | 58 | 11 | 10 | 424,31 |
| 169152 | SN 25 | TPU | 48 | 60 | 10 | 9 | 435,60 |
| 66378 | SN 25 | TPU | 48 | 63 | 11 | 10 | 435,60 |
| 56008 | SN 25 | TPU | 48 | 68 | 11 | 10 | 471,72 |
| 169139 | SN 25 | TPU | 50 | 57 | 11 | 10 | 424,31 |
| 26574 | SN 25 | TPU | 50 | 58 | 9 | 8 | 424,31 |
| 14528 | SN 25 | TPU | 50 | 60 | 6 | 5 | 435,60 |
| 56453 | SN 25 | TPU | 50 | 60 | 7 | 6 | 435,60 |
| 66379 | SN 25 | TPU | 50 | 60 | 8 | 7 | 435,60 |

| CODICE | TIPO | MAT. | d mm | D mm | L mm | H mm | LISTINO 5-2016 X 100 PCS € |
|---|---|---|---|---|---|---|---|
| 117423 | SN 25 | TPU | 50 | 60 | 9 | 8 | 435,60 |
| 14432 | SN 25 | TPU | 50 | 60 | 11 | 10 | 435,60 |
| 14700 | SN 25 | TPU | 50 | 60 | 12 | 11 | 435,60 |
| 14529 | SN 25 | TPU | 50 | 60 | 13 | 12 | 435,60 |
| 14731 | SN 25 | TPU | 50 | 60 | 14 | 13 | 435,60 |
| 14530 | SN 25 | TPU | 50 | 62 | 10 | 9 | 435,60 |
| 14531 | SN 25 | TPU | 50 | 63 | 7 | 6 | 435,60 |
| 68342 | SN 25 | TPU | 50 | 63 | 9 | 8 | 435,60 |
| 169175 | SN 25 | TPU | 50 | 63 | 10 | 9 | 435,60 |
| 14532 | SN 25 | TPU | 50 | 63 | 11 | 10 | 435,60 |
| 14411 | SN 25 | TPU | 50 | 65 | 11 | 10 | 449,15 |
| 169202 | SN 25 | TPU | 50 | 65 | 13 | 12 | 449,15 |
| 14533 | SN 25 | TPU | 50 | 70 | 11 | 10 | 471,72 |
| 14534 | SN 25 | TPU | 50 | 70 | 13 | 12 | 471,72 |
| 14535 | SN 25 | TPU | 50 | 70 | 19 | 18 | 471,72 |
| 14536 | SN 25 | TPU | 50 | 75 | 13 | 12 | 496,54 |
| 36408 | SN 25 | TPU | 50,8 | 60,32 | 4,76 | 0 | 436,64 |
| 162624 | SN 25 | TPU | 50,8 | 60,32 | 7,14 | 6,35 | 435,60 |
| 162625 | SN 25 | TPU | 50,8 | 60,32 | 8,72 | 7,93 | 435,60 |
| 66839 | SN 25 | TPU | 50,8 | 60,32 | 10,31 | 9,52 | 435,60 |
| 66846 | SN 25 | TPU | 50,8 | 66,67 | 14,28 | 0 | 471,72 |
| 14537 | SN 25 | TPU | 52 | 62 | 13 | 12 | 435,60 |
| 67830 | SN 25 | TPU | 53 | 63 | 6 | 5 | 435,60 |
| 14701 | SN 25 | TPU | 53 | 63 | 7,5 | 6,5 | 435,60 |
| 67833 | SN 25 | TPU | 55 | 65 | 6 | 5 | 449,15 |
| 67834 | SN 25 | TPU | 55 | 65 | 7 | 6 | 449,15 |
| 14539 | SN 25 | TPU | 55 | 65 | 11 | 10 | 449,15 |
| 14540 | SN 25 | TPU | 55 | 65 | 13 | 12 | 449,15 |
| 117425 | SN 25 | TPU | 55 | 70 | 11 | 10 | 471,72 |
| 14424 | SN 25 | TPU | 55 | 70 | 13 | 12 | 471,72 |
| 14417 | SN 25 | TPU | 55 | 75 | 11 | 10 | 496,54 |
| 14541 | SN 25 | TPU | 55 | 75 | 13 | 12 | 496,54 |
| 14542 | SN 25 | TPU | 55 | 80 | 13 | 12 | 510,08 |
| 67853 | SN 25 | TPU | 55 | 80 | 19 | 18 | 510,08 |
| 89987 | SN 25 | TPU | 56 | 66 | 7,5 | 6,7 | 471,72 |
| 67838 | SN 25 | TPU | 56 | 70 | 12 | 0 | 471,72 |
| 39173 | SN 25 | TPU | 56 | 71 | 11 | 10 | 471,72 |
| 36419 | SN 25 | TPU | 57,15 | 69,85 | 10,31 | 9,52 | 471,72 |
| 14543 | SN 25 | TPU | 60 | 68 | 9 | 8 | 471,72 |
| 79746 | SN 25 | TPU | 60 | 68 | 12 | 0 | 471,72 |
| 14544 | SN 25 | TPU | 60 | 70 | 6 | 5 | 471,72 |
| 67839 | SN 25 | TPU | 60 | 70 | 7 | 6 | 471,72 |
| 14702 | SN 25 | TPU | 60 | 70 | 9 | 8 | 471,72 |
| 14545 | SN 25 | TPU | 60 | 70 | 11 | 10 | 471,72 |
| 14546 | SN 25 | TPU | 60 | 70 | 13 | 12 | 471,72 |
| 14703 | SN 25 | TPU | 60 | 75 | 11 | 10 | 496,54 |
| 14547 | SN 25 | TPU | 60 | 75 | 13 | 12 | 496,54 |
| 14548 | SN 25 | TPU | 60 | 80 | 11 | 10 | 510,08 |
| 14549 | SN 25 | TPU | 60 | 80 | 13 | 12 | 510,08 |

# GUARNIZIONE STELO - SN 25

TPU

| CODICE | TIPO | MAT. | d mm | D mm | L mm | H mm | LISTINO 5-2016 X 100 PCS € |
|---|---|---|---|---|---|---|---|
| 14550 | SN 25 | TPU | 60 | 80 | 19 | 18 | 510,08 |
| 67861 | SN 25 | TPU | 60 | 85 | 11 | 10 | 532,67 |
| 72795 | SN 25 | TPU | 60 | 85 | 13 | 12 | 532,67 |
| 169304 | SN 25 | TPU | 60 | 85 | 13,5 | 12,5 | 532,67 |
| 14551 | SN 25 | TPU | 60 | 90 | 16 | 15 | 532,67 |
| 36414 | SN 25 | TPU | 60,32 | 73,02 | 9,52 | 0 | 496,54 |
| 29545 | SN 25 | TPU | 63 | 73 | 6 | 5 | 471,72 |
| 125953 | SN 25 | TPU | 63 | 75 | 10 | 9 | 496,54 |
| 14705 | SN 25 | TPU | 63 | 75 | 11 | 10 | 496,54 |
| 14554 | SN 25 | TPU | 63 | 75 | 13 | 12 | 496,54 |
| 14555 | SN 25 | TPU | 63 | 78 | 11 | 10 | 510,08 |
| 67854 | SN 25 | TPU | 63 | 80 | 10 | 9 | 510,08 |
| 79747 | SN 25 | TPU | 63 | 83 | 12 | 0 | 532,67 |
| 14556 | SN 25 | TPU | 63 | 83 | 16 | 15 | 532,67 |
| 36423 | SN 25 | TPU | 63,5 | 76,2 | 10,31 | 9,52 | 533,29 |
| 171042 | SN 25 | TPU | 63,5 | 82,55 | 14,3 | 12,7 | 532,67 |
| 67846 | SN 25 | TPU | 65 | 75 | 7 | 6 | 496,54 |
| 67847 | SN 25 | TPU | 65 | 75 | 11 | 10 | 496,54 |
| 14557 | SN 25 | TPU | 65 | 75 | 13 | 12 | 496,54 |
| 35468 | SN 25 | TPU | 65 | 80 | 11 | 10 | 510,08 |
| 14706 | SN 25 | TPU | 65 | 80 | 12 | 11 | 510,08 |
| 14426 | SN 25 | TPU | 65 | 80 | 13 | 12 | 510,08 |
| 14552 | SN 25 | TPU | 65 | 85 | 11 | 10 | 532,67 |
| 14422 | SN 25 | TPU | 65 | 85 | 13 | 12 | 532,67 |
| 67867 | SN 25 | TPU | 65 | 90 | 13 | 12 | 532,67 |
| 67868 | SN 25 | TPU | 65 | 90 | 19 | 18 | 532,67 |
| 169266 | SN 25 | TPU | 66 | 76 | 9 | 8 | 510,08 |
| 66860 | SN 25 | TPU | 66,67 | 82,55 | 7,93 | 0 | 532,67 |
| 65495 | SN 25 | TPU | 67 | 77 | 11 | 10 | 510,08 |
| 14558 | SN 25 | TPU | 67 | 77 | 13 | 12 | 510,08 |
| 36420 | SN 25 | TPU | 69,85 | 82,55 | 9,52 | 0 | 532,67 |
| 66867 | SN 25 | TPU | 69,85 | 88,9 | 12,7 | 0 | 532,67 |
| 14746 | SN 25 | TPU | 70 | 80 | 11 | 10 | 510,08 |
| 14412 | SN 25 | TPU | 70 | 80 | 13 | 12 | 510,08 |
| 77490 | SN 25 | TPU | 100 | 110 | 6 | 5 | 659,03 |
| 169392 | SN 25 | TPU | 100 | 110 | 9 | 8 | 659,04 |
| 67901 | SN 25 | TPU | 100 | 115 | 10 | 9 | 712,22 |
| 14581 | SN 25 | TPU | 100 | 115 | 13 | 12 | 712,22 |
| 44858 | SN 25 | TPU | 100 | 120 | 11 | 10 | 783,02 |
| 14582 | SN 25 | TPU | 100 | 120 | 13 | 12 | 783,02 |
| 14583 | SN 25 | TPU | 100 | 120 | 16 | 15 | 783,02 |
| 14733 | SN 25 | TPU | 100 | 120 | 19 | 18 | 783,02 |
| 14642 | SN 25 | TPU | 100 | 125 | 13 | 12 | 783,02 |
| 14584 | SN 25 | TPU | 100 | 125 | 16 | 15 | 783,02 |
| 22667 | SN 25 | TPU | 100 | 130 | 13 | 12 | 915,72 |
| 169431 | SN 25 | TPU | 100 | 130 | 16 | 15 | 915,73 |
| 14748 | SN 25 | TPU | 105 | 120 | 9 | 8 | 783,02 |
| 14718 | SN 25 | TPU | 105 | 120 | 16 | 15 | 783,02 |
| 78529 | SN 25 | TPU | 105 | 125 | 11 | 10 | 783,02 |

| CODICE | TIPO | MAT. | d mm | D mm | L mm | H mm | LISTINO 5-2016 X 100 PCS € |
|---|---|---|---|---|---|---|---|
| 14749 | SN 25 | TPU | 105 | 125 | 13 | 12 | 783,02 |
| 66751 | SN 25 | TPU | 105 | 125 | 15 | 14 | 783,02 |
| 14585 | SN 25 | TPU | 105 | 125 | 16 | 15 | 783,02 |
| 66752 | SN 25 | TPU | 106 | 120 | 9,5 | 8,5 | 783,02 |
| 14719 | SN 25 | TPU | 110 | 125 | 13 | 12 | 783,02 |
| 14431 | SN 25 | TPU | 110 | 125 | 16 | 15 | 783,02 |
| 67906 | SN 25 | TPU | 110 | 130 | 13 | 12 | 915,72 |
| 14586 | SN 25 | TPU | 110 | 130 | 16 | 15 | 915,72 |
| 14720 | SN 25 | TPU | 110 | 130 | 19 | 18 | 915,72 |
| 169449 | SN 25 | TPU | 110 | 135 | 19 | 18 | 915,73 |
| 14721 | SN 25 | TPU | 113 | 125 | 10,5 | 9,5 | 783,02 |
| 66904 | SN 25 | TPU | 114,3 | 133,35 | 9,52 | 0 | 915,73 |
| 171050 | SN 25 | TPU | 115 | 125 | 16 | 15 | 915,73 |
| 171051 | SN 25 | TPU | 115 | 126 | 16 | 15 | 915,72 |
| 169441 | SN 25 | TPU | 115 | 130 | 11 | 10 | 915,73 |
| 14589 | SN 25 | TPU | 115 | 130 | 16 | 15 | 915,72 |
| 67909 | SN 25 | TPU | 115 | 135 | 13 | 12 | 915,72 |
| 14590 | SN 25 | TPU | 115 | 135 | 16 | 15 | 915,72 |
| 21683 | SN 25 | TPU | 115 | 140 | 16 | 15 | 1.056,80 |
| 67907 | SN 25 | TPU | 120 | 130 | 6 | 5 | 915,72 |
| 169445 | SN 25 | TPU | 120 | 130 | 15 | 14 | 915,73 |
| 14591 | SN 25 | TPU | 120 | 135 | 16 | 15 | 915,72 |
| 14592 | SN 25 | TPU | 120 | 140 | 11 | 10 | 1.056,80 |
| 72796 | SN 25 | TPU | 120 | 140 | 13 | 12 | 1.056,80 |
| 14593 | SN 25 | TPU | 120 | 140 | 16 | 15 | 1.056,80 |
| 67919 | SN 25 | TPU | 120 | 150 | 16 | 15 | 1.108,40 |
| 79755 | SN 25 | TPU | 125 | 135 | 10 | 0 | 915,73 |
| 14723 | SN 25 | TPU | 125 | 140 | 12 | 11 | 1.056,80 |
| 14594 | SN 25 | TPU | 125 | 140 | 16 | 15 | 1.056,80 |
| 14595 | SN 25 | TPU | 125 | 145 | 16 | 15 | 1.108,40 |
| 67920 | SN 25 | TPU | 125 | 150 | 13 | 12 | 1.108,40 |
| 14751 | SN 25 | TPU | 125 | 155 | 16 | 15 | 1.307,47 |
| 14598 | SN 25 | TPU | 130 | 150 | 16 | 15 | 1.108,40 |
| 79756 | SN 25 | TPU | 130 | 160 | 16 | 15 | 1.332,05 |
| 169488 | SN 25 | TPU | 130 | 160 | 19 | 18 | 1.332,05 |
| 14599 | SN 25 | TPU | 135 | 150 | 16 | 15 | 1.108,40 |
| 14600 | SN 25 | TPU | 135 | 155 | 16 | 15 | 1.307,47 |
| 14755 | SN 25 | TPU | 135 | 160 | 16 | 15 | 1.332,05 |
| 67923 | SN 25 | TPU | 140 | 150 | 6 | 5 | 1.108,40 |
| 46129 | SN 25 | TPU | 140 | 155 | 16 | 15 | 1.307,47 |
| 72797 | SN 25 | TPU | 140 | 160 | 6 | 0 | 1.332,05 |
| 169491 | SN 25 | TPU | 140 | 160 | 11 | 10 | 1.332,05 |
| 14603 | SN 25 | TPU | 140 | 160 | 13 | 12 | 1.332,05 |
| 14604 | SN 25 | TPU | 140 | 160 | 16 | 15 | 1.332,05 |
| 14605 | SN 25 | TPU | 145 | 165 | 16 | 15 | 1.332,05 |
| 14606 | SN 25 | TPU | 150 | 170 | 16 | 15 | 1.452,48 |
| 169511 | SN 25 | TPU | 150 | 180 | 16 | 15 | 1.332,05 |
| 67933 | SN 25 | TPU | 150 | 180 | 19 | 18 | 1.742,48 |
| 14608 | SN 25 | TPU | 155 | 175 | 16 | 15 | 1.742,48 |

# GUARNIZIONE STELO - SN 25

TPU

| CODICE | TIPO | MAT. | d mm | D mm | L mm | H mm | LISTINO 5-2016 X 100 PCS € |
|---|---|---|---|---|---|---|---|
| 38529 | SN 25 | TPU | 160 | 175 | 8,5 | 7,5 | 1.742,48 |
| 14609 | SN 25 | TPU | 160 | 180 | 16 | 15 | 1.742,48 |
| 46383 | SN 25 | TPU | 160 | 185 | 16 | 15 | 2.329,85 |
| 67935 | SN 25 | TPU | 160 | 190 | 16 | 15 | 2.329,85 |
| 156842 | SN 25 | TPU | 160 | 190 | 20 | 19 | 2.329,85 |
| 46384 | SN 25 | TPU | 165 | 190 | 16 | 15 | 2.329,85 |
| 14610 | SN 25 | TPU | 170 | 190 | 16 | 15 | 2.329,85 |
| 169530 | SN 25 | TPU | 170 | 200 | 16 | 15 | 2.329,85 |
| 21108 | SN 25 | TPU | 170 | 200 | 19 | 18 | 2.329,85 |
| 14756 | SN 25 | TPU | 175 | 200 | 16 | 15 | 2.329,85 |
| 66928 | SN 25 | TPU | 177,8 | 203,2 | 12,7 | 0 | 2.693,58 |
| 14430 | SN 25 | TPU | 180 | 200 | 16 | 15 | 2.329,85 |
| 67936 | SN 25 | TPU | 185 | 200 | 8,5 | 7,5 | 2.329,85 |
| 14613 | SN 25 | TPU | 190 | 210 | 16 | 15 | 2.693,59 |
| 14616 | SN 25 | TPU | 200 | 220 | 16 | 15 | 2.772,24 |
| 169556 | SN 25 | TPU | 200 | 225 | 19 | 18 | 3.642,37 |
| 14617 | SN 25 | TPU | 200 | 230 | 18 | 17 | 3.642,37 |
| 38196 | SN 25 | TPU | 205 | 235 | 19 | 18 | 3.919,96 |
| 14619 | SN 25 | TPU | 220 | 250 | 19 | 18 | 4.354,97 |
| 169583 | SN 25 | TPU | 225 | 245 | 16 | 15 | 4.076,75 |

# Guarnizione stelo

TPU

SN 36

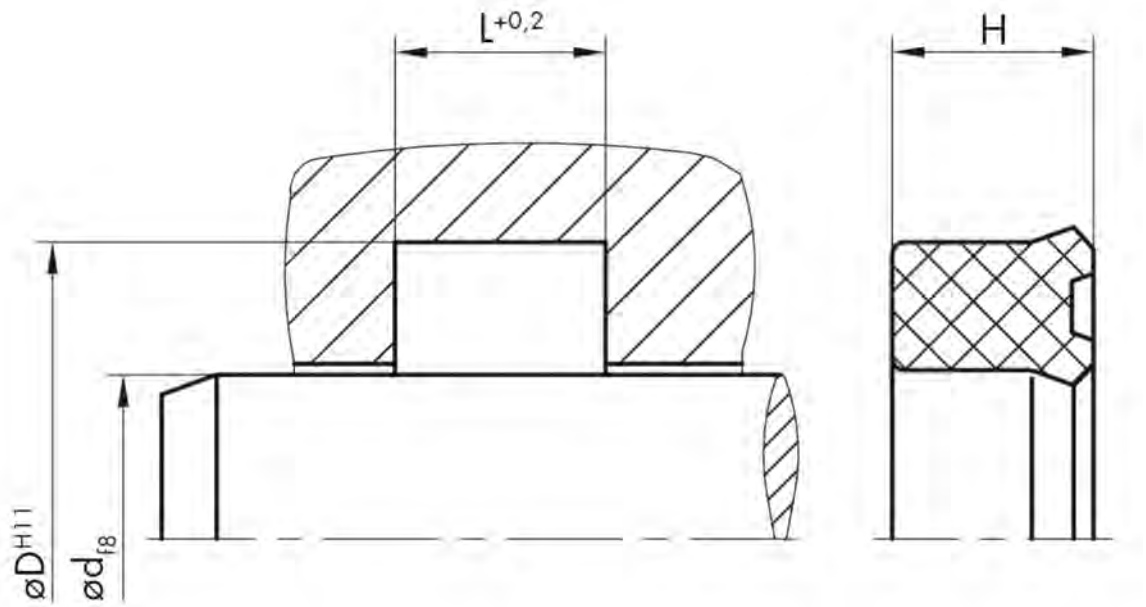
L+0,2
H
øDH11
ødf8

# GUARNIZIONE STELO - SN 36

| CODICE | TIPO | MAT. | d mm | D mm | L mm | H mm | LISTINO 5-2016 X 100 PCS € |
|---|---|---|---|---|---|---|---|
| 125303 | SN 36 | TPU | 10 | 18 | 6,3 | 5,7 | 194,28 |
| 65475 | SN 36 | TPU | 12 | 18 | 5 | 4,5 | 194,28 |
| 80613 | SN 36 | TPU | 12 | 20 | 6,3 | 5,5 | 194,28 |
| 80614 | SN 36 | TPU | 14 | 22 | 6,3 | 5,5 | 238,74 |
| 168336 | SN 36 | TPU | 16 | 22 | 4,5 | 4 | 238,74 |
| 22438 | SN 36 | TPU | 16 | 24 | 7 | 6 | 238,74 |
| 168341 | SN 36 | TPU | 18 | 25 | 5,7 | 5,1 | 276,19 |
| 22439 | SN 36 | TPU | 18 | 26 | 7 | 6 | 276,19 |
| 168357 | SN 36 | TPU | 18 | 28 | 6,3 | 5,8 | 276,19 |
| 168359 | SN 36 | TPU | 18 | 28 | 8 | 7 | 276,19 |
| 80615 | SN 36 | TPU | 20 | 26 | 5,8 | 5 | 276,19 |
| 168351 | SN 36 | TPU | 20 | 26 | 6 | 5,5 | 276,19 |
| 168353 | SN 36 | TPU | 20 | 27 | 6,5 | 5,7 | 276,19 |
| 22442 | SN 36 | TPU | 20 | 28 | 6,3 | 5,8 | 276,19 |
| 80616 | SN 36 | TPU | 20 | 28 | 7 | 6 | 276,19 |
| 173334 | SN 36 | TPU | 20 | 28 | 8 | 7 | 276,19 |
| 168369 | SN 36 | TPU | 20 | 30 | 8 | 7,2 | 276,19 |
| 168371 | SN 36 | TPU | 20 | 30 | 9 | 8 | 276,19 |
| 168373 | SN 36 | TPU | 20 | 30 | 11 | 10 | 276,19 |
| 168355 | SN 36 | TPU | 21 | 27 | 5 | 4 | 276,19 |
| 168365 | SN 36 | TPU | 22 | 28 | 5,5 | 5 | 276,19 |
| 168367 | SN 36 | TPU | 22 | 29 | 5,6 | 5 | 276,19 |
| 22444 | SN 36 | TPU | 22 | 30 | 7 | 6 | 276,19 |
| 22445 | SN 36 | TPU | 22 | 30 | 8 | 7 | 276,19 |
| 22446 | SN 36 | TPU | 22 | 32 | 8 | 7 | 301,95 |
| 22447 | SN 36 | TPU | 22 | 32 | 9 | 8 | 301,95 |
| 80619 | SN 36 | TPU | 24 | 30 | 9 | 8 | 276,19 |
| 80620 | SN 36 | TPU | 24 | 32 | 7 | 6 | 301,95 |
| 168389 | SN 36 | TPU | 24 | 34 | 6,5 | 6 | 301,95 |
| 168384 | SN 36 | TPU | 25 | 32 | 5 | 4 | 301,95 |
| 22448 | SN 36 | TPU | 25 | 33 | 6,3 | 5,8 | 301,95 |
| 80621 | SN 36 | TPU | 25 | 33 | 7 | 6 | 301,95 |
| 22449 | SN 36 | TPU | 25 | 33 | 9 | 8 | 301,95 |
| 168391 | SN 36 | TPU | 25 | 35 | 6 | 5 | 301,95 |
| 168393 | SN 36 | TPU | 25 | 35 | 8 | 7 | 301,95 |
| 168395 | SN 36 | TPU | 25 | 35 | 9 | 8 | 301,95 |
| 168397 | SN 36 | TPU | 25 | 35 | 10 | 9 | 301,95 |
| 168399 | SN 36 | TPU | 25 | 35 | 11 | 10 | 301,95 |
| 168401 | SN 36 | TPU | 25 | 36 | 6 | 5 | 301,95 |
| 168405 | SN 36 | TPU | 25 | 38 | 11 | 10 | 301,95 |
| 22453 | SN 36 | TPU | 28 | 36 | 6,3 | 5,8 | 301,95 |
| 22454 | SN 36 | TPU | 28 | 36 | 9 | 8 | 301,95 |
| 168407 | SN 36 | TPU | 28 | 38 | 8 | 7 | 301,95 |
| 168409 | SN 36 | TPU | 30 | 38 | 6,3 | 5,8 | 301,95 |
| 22457 | SN 36 | TPU | 30 | 38 | 9 | 8 | 301,95 |
| 22458 | SN 36 | TPU | 30 | 40 | 8 | 7 | 313,65 |
| 168414 | SN 36 | TPU | 30 | 40 | 11 | 10 | 313,65 |
| 168416 | SN 36 | TPU | 32 | 40 | 6,3 | 5,8 | 313,65 |
| 80624 | SN 36 | TPU | 32 | 40 | 7 | 6 | 313,65 |

# GUARNIZIONE STELO - SN 36

TPU

| CODICE | TIPO | MAT. | d mm | D mm | L mm | H mm | LISTINO 5-2016 X 100 PCS € |
|---|---|---|---|---|---|---|---|
| 22461 | SN 36 | TPU | 32 | 40 | 9 | 8 | 313,65 |
| 168421 | SN 36 | TPU | 32 | 42 | 8 | 7 | 327,68 |
| 24314 | SN 36 | TPU | 32 | 42 | 9 | 8 | 327,68 |
| 168424 | SN 36 | TPU | 32 | 42 | 11 | 10 | 327,68 |
| 22463 | SN 36 | TPU | 35 | 43 | 7 | 6 | 327,68 |
| 22465 | SN 36 | TPU | 35 | 45 | 8 | 7 | 414,30 |
| 168432 | SN 36 | TPU | 35 | 45 | 11 | 10 | 414,30 |
| 22467 | SN 36 | TPU | 36 | 44 | 7 | 6 | 327,68 |
| 22468 | SN 36 | TPU | 36 | 44 | 9 | 8 | 327,68 |
| 168440 | SN 36 | TPU | 36 | 46 | 8 | 7 | 414,30 |
| 168442 | SN 36 | TPU | 36 | 46 | 11 | 10 | 414,30 |
| 37419 | SN 36 | TPU | 38 | 45 | 7 | 6 | 414,30 |
| 22471 | SN 36 | TPU | 40 | 48 | 6,3 | 5,8 | 414,30 |
| 79848 | SN 36 | TPU | 40 | 48 | 7 | 6 | 414,30 |
| 22472 | SN 36 | TPU | 40 | 48 | 9 | 8 | 414,30 |
| 168447 | SN 36 | TPU | 40 | 50 | 7 | 6 | 414,30 |
| 168449 | SN 36 | TPU | 40 | 50 | 8 | 7 | 414,30 |
| 22474 | SN 36 | TPU | 40 | 50 | 11 | 10 | 414,30 |
| 79852 | SN 36 | TPU | 42 | 50 | 7 | 6 | 414,30 |
| 168455 | SN 36 | TPU | 42 | 53 | 10 | 9 | 414,30 |
| 168457 | SN 36 | TPU | 45 | 53 | 7 | 6 | 414,30 |
| 22476 | SN 36 | TPU | 45 | 53 | 9 | 8 | 414,30 |
| 168460 | SN 36 | TPU | 45 | 53 | 11 | 10 | 414,30 |
| 22478 | SN 36 | TPU | 45 | 55 | 8 | 7 | 440,04 |
| 168465 | SN 36 | TPU | 45 | 55 | 11 | 10 | 440,04 |
| 168462 | SN 36 | TPU | 46 | 54 | 9 | 8 | 414,30 |
| 22480 | SN 36 | TPU | 50 | 58 | 9 | 8 | 451,75 |
| 22481 | SN 36 | TPU | 50 | 60 | 8 | 7 | 451,75 |
| 22482 | SN 36 | TPU | 50 | 60 | 11 | 10 | 451,75 |
| 168475 | SN 36 | TPU | 50 | 62 | 9 | 8 | 451,75 |
| 168477 | SN 36 | TPU | 50 | 62 | 11 | 10 | 451,75 |
| 168481 | SN 36 | TPU | 50 | 65 | 11 | 10 | 465,78 |
| 22483 | SN 36 | TPU | 55 | 63 | 9 | 8 | 465,78 |
| 168483 | SN 36 | TPU | 55 | 65 | 8 | 7,2 | 465,78 |
| 79860 | SN 36 | TPU | 55 | 65 | 8,5 | 7,5 | 465,78 |
| 22485 | SN 36 | TPU | 55 | 65 | 11 | 10 | 465,78 |
| 168487 | SN 36 | TPU | 55 | 65 | 13 | 12 | 465,78 |
| 6426 | SN 36 | TPU | 56 | 66 | 7,5 | 6,5 | 465,78 |
| 168491 | SN 36 | TPU | 56 | 66 | 11 | 10 | 465,78 |
| 125315 | SN 36 | TPU | 56 | 71 | 9,5 | 8,5 | 489,19 |
| 22486 | SN 36 | TPU | 60 | 68 | 9 | 8 | 489,19 |
| 65492 | SN 36 | TPU | 60 | 68 | 14 | 13 | 489,19 |
| 79863 | SN 36 | TPU | 60 | 70 | 8 | 7 | 489,19 |
| 22487 | SN 36 | TPU | 60 | 70 | 8 | 7,2 | 489,19 |
| 115701 | SN 36 | TPU | 60 | 70 | 8,5 | 7,5 | 489,19 |
| 168507 | SN 36 | TPU | 60 | 70 | 11 | 10 | 489,19 |
| 168509 | SN 36 | TPU | 60 | 70 | 13 | 12 | 489,19 |
| 22490 | SN 36 | TPU | 60 | 72 | 10 | 9 | 489,19 |
| 168498 | SN 36 | TPU | 61 | 69 | 9 | 8 | 489,19 |

TPU

# GUARNIZIONE STELO - SN 36

| CODICE | TIPO | MAT. | d mm | D mm | L mm | H mm | LISTINO 5-2016 X 100 PCS € |
|---|---|---|---|---|---|---|---|
| 22491 | SN 36 | TPU | 63 | 71 | 9 | 8 | 489,19 |
| 24320 | SN 36 | TPU | 63 | 75 | 11 | 10 | 540,69 |
| 79868 | SN 36 | TPU | 65 | 73 | 9 | 8 | 540,69 |
| 22492 | SN 36 | TPU | 65 | 75 | 13 | 12 | 540,69 |
| 115702 | SN 36 | TPU | 65 | 77 | 10 | 9 | 540,69 |
| 168528 | SN 36 | TPU | 66 | 80 | 11 | 10,5 | 540,69 |
| 168496 | SN 36 | TPU | 68 | 76 | 9 | 8 | 540,69 |
| 79871 | SN 36 | TPU | 70 | 78 | 9 | 8 | 540,69 |
| 168532 | SN 36 | TPU | 70 | 80 | 11 | 10 | 540,69 |
| 168534 | SN 36 | TPU | 70 | 80 | 13 | 12 | 540,69 |
| 77611 | SN 36 | TPU | 100 | 108 | 9 | 8 | 673,79 |
| 168580 | SN 36 | TPU | 107 | 115 | 9 | 8 | 741,29 |
| 66744 | SN 36 | TPU | 118 | 126 | 14 | 13 | 865,02 |
| 168585 | SN 36 | TPU | 120 | 135 | 16 | 15 | 897,64 |
| 168583 | SN 36 | TPU | 126 | 134 | 9 | 8 | 897,64 |
| 61441 | SN 36 | TPU | 143 | 151 | 14 | 13 | 1.157,49 |
| 168590 | SN 36 | TPU | 145 | 153 | 9 | 8 | 1.157,49 |

# Guarnizione stelo

TPU

SNI 30

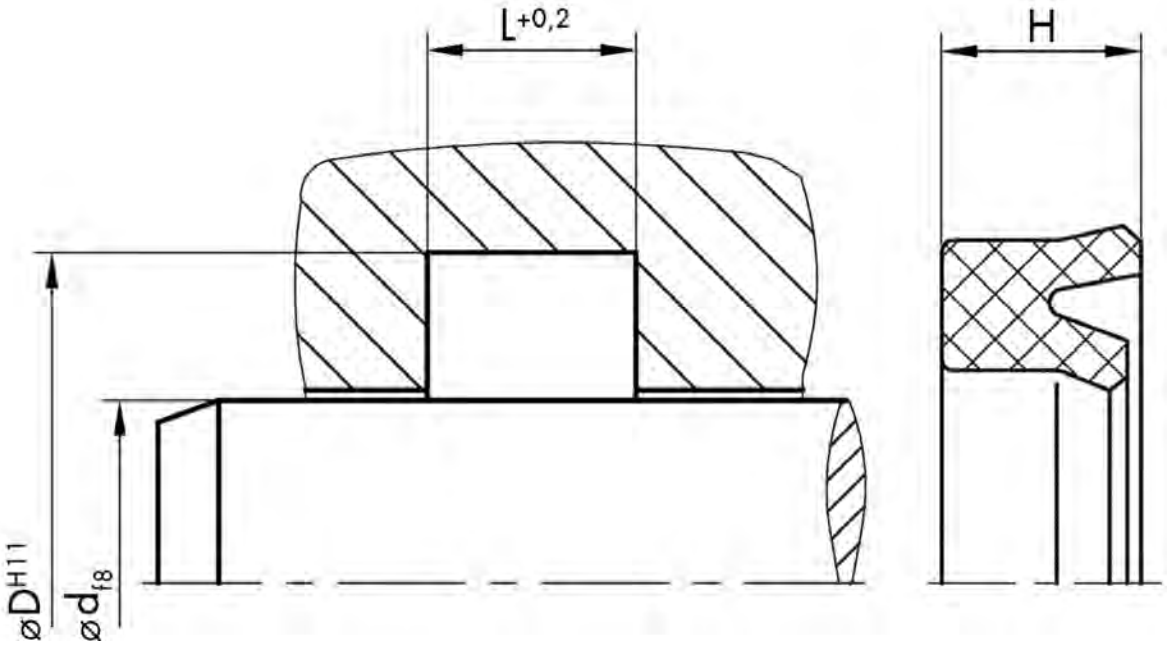
L+0,2
H
øDH11
ød f8

TPU

# GUARNIZIONE STELO - SNI 30

| CODICE | TIPO | MAT. | d mm | D mm | L mm | H mm | LISTINO 5-2016 X 100 PCS € |
|---|---|---|---|---|---|---|---|
| 171058 | SNI 30 | TPU | 6 | 12 | 5,8 | 5,3 | 147,46 |
| 16008 | SNI 30 | TPU | 6 | 14 | 6,3 | 5,7 | 147,46 |
| 157093 | SNI 30 | TPU | 8 | 14 | 6 | 5 | 147,46 |
| 16010 | SNI 30 | TPU | 8 | 16 | 6,3 | 5,7 | 170,63 |
| 16194 | SNI 30 | TPU | 8 | 16 | 9 | 8 | 170,63 |
| 171059 | SNI 30 | TPU | 8 | 18 | 9 | 8 | 170,63 |
| 16192 | SNI 30 | TPU | 10 | 16 | 5,2 | 4,5 | 170,63 |
| 16011 | SNI 30 | TPU | 10 | 18 | 6,3 | 5,7 | 170,63 |
| 16012 | SNI 30 | TPU | 10 | 20 | 8 | 7,2 | 191,69 |
| 171060 | SNI 30 | TPU | 10 | 20 | 9 | 8 | 204,33 |
| 16013 | SNI 30 | TPU | 12 | 20 | 6,3 | 5,7 | 204,33 |
| 16014 | SNI 30 | TPU | 12 | 22 | 8 | 7,2 | 204,33 |
| 15920 | SNI 30 | TPU | 12 | 22 | 9 | 8 | 204,33 |
| 16015 | SNI 30 | TPU | 14 | 22 | 6,3 | 5,7 | 204,33 |
| 16016 | SNI 30 | TPU | 14 | 24 | 8 | 7,2 | 214,86 |
| 15913 | SNI 30 | TPU | 14 | 24 | 9 | 8 | 214,86 |
| 16017 | SNI 30 | TPU | 15 | 23 | 6,3 | 5,7 | 214,86 |
| 15980 | SNI 30 | TPU | 15 | 25 | 9 | 8 | 214,86 |
| 171061 | SNI 30 | TPU | 16 | 20,6 | 3,6 | 3,3 | 214,86 |
| 15914 | SNI 30 | TPU | 16 | 22 | 5,5 | 5 | 214,86 |
| 171062 | SNI 30 | TPU | 16 | 22 | 6 | 5,5 | 214,86 |
| 16018 | SNI 30 | TPU | 16 | 24 | 6,3 | 5,7 | 214,86 |
| 171063 | SNI 30 | TPU | 16 | 24 | 7 | 6,2 | 214,86 |
| 16020 | SNI 30 | TPU | 16 | 26 | 8 | 7,2 | 238,03 |
| 15915 | SNI 30 | TPU | 16 | 26 | 9 | 8 | 238,03 |
| 65479 | SNI 30 | TPU | 16 | 26 | 10 | 9 | 238,03 |
| 171064 | SNI 30 | TPU | 18 | 24 | 5,2 | 4,7 | 238,03 |
| 16022 | SNI 30 | TPU | 18 | 26 | 6,3 | 5,7 | 238,03 |
| 16176 | SNI 30 | TPU | 18 | 26 | 9 | 8 | 238,03 |
| 16023 | SNI 30 | TPU | 18 | 28 | 8 | 7,2 | 238,04 |
| 15916 | SNI 30 | TPU | 18 | 28 | 9 | 8 | 238,03 |
| 16024 | SNI 30 | TPU | 20 | 26 | 5,6 | 4,6 | 238,04 |
| 16199 | SNI 30 | TPU | 20 | 27 | 7 | 6 | 238,03 |
| 16025 | SNI 30 | TPU | 20 | 28 | 6,3 | 5,7 | 238,03 |
| 16026 | SNI 30 | TPU | 20 | 28 | 7 | 6,2 | 238,03 |
| 171066 | SNI 30 | TPU | 20 | 28 | 8 | 7,2 | 238,03 |
| 16028 | SNI 30 | TPU | 20 | 30 | 8 | 7,2 | 248,58 |
| 15917 | SNI 30 | TPU | 20 | 30 | 9 | 8 | 248,58 |
| 15918 | SNI 30 | TPU | 20 | 30 | 11 | 10 | 248,58 |
| 171067 | SNI 30 | TPU | 20 | 32 | 8,5 | 7,5 | 248,58 |
| 171068 | SNI 30 | TPU | 20 | 35 | 11 | 10 | 248,58 |
| 16029 | SNI 30 | TPU | 22 | 30 | 6,3 | 5,7 | 248,58 |
| 16197 | SNI 30 | TPU | 22 | 30 | 8 | 7 | 248,58 |
| 117377 | SNI 30 | TPU | 22 | 30 | 9 | 8 | 248,58 |
| 16030 | SNI 30 | TPU | 22 | 32 | 8 | 7,2 | 248,58 |
| 15919 | SNI 30 | TPU | 22 | 32 | 9 | 8 | 248,58 |
| 171069 | SNI 30 | TPU | 22 | 32 | 10 | 9 | 248,58 |
| 171070 | SNI 30 | TPU | 22 | 32 | 11 | 10 | 248,58 |
| 171071 | SNI 30 | TPU | 24 | 34 | 8 | 7,2 | 271,76 |

# GUARNIZIONE STELO - SNI 30

TPU

| CODICE | TIPO | MAT. | d mm | D mm | L mm | H mm | LISTINO 5-2016 X 100 PCS € |
|---|---|---|---|---|---|---|---|
| 171072 | SNI 30 | TPU | 24 | 34 | 9,5 | 8,5 | 271,76 |
| 83381 | SNI 30 | TPU | 25 | 32 | 7 | 6 | 271,76 |
| 16033 | SNI 30 | TPU | 25 | 33 | 6,3 | 5,7 | 271,76 |
| 16177 | SNI 30 | TPU | 25 | 33 | 7 | 6,2 | 271,76 |
| 16034 | SNI 30 | TPU | 25 | 33 | 8 | 7,2 | 271,76 |
| 80843 | SNI 30 | TPU | 25 | 33 | 9 | 8 | 271,76 |
| 16035 | SNI 30 | TPU | 25 | 33 | 11 | 10 | 271,76 |
| 16036 | SNI 30 | TPU | 25 | 35 | 8 | 7,2 | 271,76 |
| 15922 | SNI 30 | TPU | 25 | 35 | 9 | 8 | 271,76 |
| 15923 | SNI 30 | TPU | 25 | 35 | 11 | 10 | 271,76 |
| 171073 | SNI 30 | TPU | 25 | 38 | 10 | 9 | 271,76 |
| 15924 | SNI 30 | TPU | 25 | 40 | 11 | 10 | 271,76 |
| 16037 | SNI 30 | TPU | 28 | 36 | 6,3 | 5,7 | 271,76 |
| 16038 | SNI 30 | TPU | 28 | 38 | 8 | 7,2 | 271,76 |
| 15925 | SNI 30 | TPU | 28 | 38 | 9 | 8 | 271,76 |
| 171074 | SNI 30 | TPU | 28 | 38 | 11 | 10 | 271,76 |
| 171075 | SNI 30 | TPU | 28 | 40 | 9,5 | 8,5 | 271,76 |
| 80848 | SNI 30 | TPU | 28 | 40 | 11 | 10 | 271,76 |
| 16040 | SNI 30 | TPU | 28 | 43 | 12,5 | 11,5 | 271,76 |
| 171076 | SNI 30 | TPU | 29 | 35 | 6,3 | 4,8 | 271,76 |
| 16041 | SNI 30 | TPU | 30 | 38 | 6,3 | 5,7 | 271,76 |
| 16179 | SNI 30 | TPU | 30 | 38 | 9 | 8 | 271,76 |
| 171077 | SNI 30 | TPU | 30 | 40 | 6,3 | 5,7 | 282,28 |
| 80230 | SNI 30 | TPU | 30 | 40 | 8 | 7 | 282,28 |
| 16043 | SNI 30 | TPU | 30 | 40 | 8,2 | 7,2 | 282,28 |
| 171078 | SNI 30 | TPU | 30 | 40 | 10,5 | 9,5 | 282,28 |
| 15927 | SNI 30 | TPU | 30 | 40 | 11 | 10 | 282,28 |
| 171079 | SNI 30 | TPU | 30 | 43 | 10 | 9 | 294,93 |
| 171080 | SNI 30 | TPU | 30 | 45 | 9 | 8 | 294,93 |
| 15910 | SNI 30 | TPU | 30 | 45 | 11 | 10 | 294,93 |
| 150523 | SNI 30 | TPU | 30,95 | 45,24 | 11,5 | 10,31 | 294,92 |
| 16047 | SNI 30 | TPU | 32 | 40 | 6,3 | 5,7 | 294,93 |
| 16048 | SNI 30 | TPU | 32 | 40 | 9 | 8 | 294,93 |
| 90530 | SNI 30 | TPU | 32 | 42 | 8 | 7 | 294,93 |
| 16049 | SNI 30 | TPU | 32 | 42 | 8 | 7,2 | 294,93 |
| 80849 | SNI 30 | TPU | 32 | 42 | 9 | 8 | 294,93 |
| 15929 | SNI 30 | TPU | 32 | 42 | 11 | 10 | 294,93 |
| 171081 | SNI 30 | TPU | 32 | 42,53 | 9 | 8,5 | 339,16 |
| 171082 | SNI 30 | TPU | 32 | 45 | 10,5 | 9,5 | 339,16 |
| 74321 | SNI 30 | TPU | 32 | 45 | 11 | 10 | 339,16 |
| 15930 | SNI 30 | TPU | 32 | 47 | 11 | 10 | 339,16 |
| 171083 | SNI 30 | TPU | 33 | 43 | 11 | 10 | 339,16 |
| 16052 | SNI 30 | TPU | 35 | 43 | 6,3 | 5,7 | 339,16 |
| 16180 | SNI 30 | TPU | 35 | 43 | 9 | 8 | 339,16 |
| 171084 | SNI 30 | TPU | 35 | 45 | 7 | 6 | 339,16 |
| 148964 | SNI 30 | TPU | 35 | 45 | 8 | 7 | 339,16 |
| 16053 | SNI 30 | TPU | 35 | 45 | 8 | 7,2 | 339,16 |
| 15979 | SNI 30 | TPU | 35 | 45 | 11 | 10 | 339,16 |
| 171085 | SNI 30 | TPU | 35 | 45 | 13,5 | 13 | 339,16 |

# GUARNIZIONE STELO - SNI 30

| CODICE | TIPO | MAT. | d mm | D mm | L mm | H mm | LISTINO 5-2016 X 100 PCS € |
|---|---|---|---|---|---|---|---|
| 171086 | SNI 30 | TPU | 35 | 46 | 9 | 8 | 351,80 |
| 171087 | SNI 30 | TPU | 35 | 46 | 10 | 9 | 351,80 |
| 171088 | SNI 30 | TPU | 35 | 47 | 9 | 8,5 | 351,80 |
| 15981 | SNI 30 | TPU | 35 | 50 | 11 | 10 | 351,80 |
| 171089 | SNI 30 | TPU | 35 | 55 | 13 | 12 | 351,80 |
| 5016 | SNI 30 | TPU | 36 | 44 | 6,3 | 5,7 | 351,80 |
| 80752 | SNI 30 | TPU | 36 | 44 | 9 | 8 | 351,80 |
| 16058 | SNI 30 | TPU | 36 | 46 | 8 | 7 | 351,80 |
| 15931 | SNI 30 | TPU | 36 | 46 | 11 | 10 | 351,80 |
| 171098 | SNI 30 | TPU | 36 | 48 | 8 | 7,5 | 372,86 |
| 16059 | SNI 30 | TPU | 36 | 48 | 9 | 8 | 372,86 |
| 171099 | SNI 30 | TPU | 36 | 51 | 11 | 10 | 372,86 |
| 16060 | SNI 30 | TPU | 36 | 51 | 12,5 | 11,5 | 372,86 |
| 171100 | SNI 30 | TPU | 37 | 45 | 6,3 | 5,7 | 372,86 |
| 64925 | SNI 30 | TPU | 37 | 47 | 11 | 10 | 372,86 |
| 171101 | SNI 30 | TPU | 38 | 44,5 | 5,3 | 4,8 | 372,86 |
| 171102 | SNI 30 | TPU | 38 | 45 | 5,5 | 5 | 372,86 |
| 171103 | SNI 30 | TPU | 38 | 45 | 7 | 6,2 | 372,86 |
| 16064 | SNI 30 | TPU | 40 | 48 | 6,3 | 5,7 | 372,86 |
| 80235 | SNI 30 | TPU | 40 | 48 | 9 | 8 | 372,86 |
| 171104 | SNI 30 | TPU | 40 | 49,52 | 10,5 | 10 | 372,86 |
| 16066 | SNI 30 | TPU | 40 | 50 | 8 | 7,2 | 372,86 |
| 117385 | SNI 30 | TPU | 40 | 50 | 9 | 8 | 372,86 |
| 171105 | SNI 30 | TPU | 40 | 50 | 10 | 9 | 372,86 |
| 15933 | SNI 30 | TPU | 40 | 50 | 11 | 10 | 372,86 |
| 171106 | SNI 30 | TPU | 40 | 50 | 13,5 | 12,5 | 372,86 |
| 16068 | SNI 30 | TPU | 40 | 52 | 9 | 8 | 372,86 |
| 43071 | SNI 30 | TPU | 40 | 55 | 8 | 7,2 | 396,03 |
| 15934 | SNI 30 | TPU | 40 | 55 | 11 | 10 | 396,03 |
| 16069 | SNI 30 | TPU | 40 | 55 | 12,5 | 11,5 | 396,03 |
| 171107 | SNI 30 | TPU | 40 | 60 | 13 | 12 | 396,03 |
| 171108 | SNI 30 | TPU | 42 | 62 | 11 | 10,5 | 396,03 |
| 171109 | SNI 30 | TPU | 42 | 62 | 13 | 12,5 | 396,03 |
| 16070 | SNI 30 | TPU | 45 | 53 | 6,3 | 5,7 | 396,03 |
| 73773 | SNI 30 | TPU | 45 | 53 | 9 | 8 | 396,03 |
| 16071 | SNI 30 | TPU | 45 | 53 | 11 | 10 | 396,03 |
| 16072 | SNI 30 | TPU | 45 | 53 | 13 | 12 | 396,03 |
| 125030 | SNI 30 | TPU | 45 | 55 | 6,3 | 5,7 | 396,03 |
| 148582 | SNI 30 | TPU | 45 | 55 | 6,5 | 5,8 | 396,03 |
| 16073 | SNI 30 | TPU | 45 | 55 | 8 | 7,2 | 396,03 |
| 15936 | SNI 30 | TPU | 45 | 55 | 11 | 10 | 396,03 |
| 16074 | SNI 30 | TPU | 45 | 57,7 | 10,5 | 9,5 | 396,03 |
| 171110 | SNI 30 | TPU | 45 | 58 | 10 | 9 | 396,03 |
| 15937 | SNI 30 | TPU | 45 | 60 | 11 | 10 | 396,03 |
| 16076 | SNI 30 | TPU | 45 | 60 | 12,5 | 11,5 | 396,03 |
| 171111 | SNI 30 | TPU | 45 | 65 | 11 | 10 | 396,03 |
| 15938 | SNI 30 | TPU | 45 | 65 | 13 | 12 | 396,03 |
| 16077 | SNI 30 | TPU | 45 | 65 | 14,5 | 13,5 | 396,03 |
| 171112 | SNI 30 | TPU | 46 | 56 | 8 | 7,5 | 396,03 |

# GUARNIZIONE STELO - SNI 30

TPU

| CODICE | TIPO | MAT. | d mm | D mm | L mm | H mm | LISTINO 5-2016 X 100 PCS € |
|---|---|---|---|---|---|---|---|
| 16079 | SNI 30 | TPU | 50 | 60 | 8 | 7 | 406,57 |
| 15939 | SNI 30 | TPU | 50 | 60 | 11 | 10 | 406,57 |
| 171113 | SNI 30 | TPU | 50 | 60 | 13 | 12 | 406,57 |
| 171114 | SNI 30 | TPU | 50 | 62 | 9 | 8 | 406,57 |
| 171115 | SNI 30 | TPU | 50 | 62,7 | 10,5 | 10 | 419,20 |
| 15940 | SNI 30 | TPU | 50 | 65 | 11 | 10 | 419,20 |
| 16082 | SNI 30 | TPU | 50 | 65 | 12,5 | 11,5 | 419,20 |
| 171116 | SNI 30 | TPU | 50 | 68 | 10 | 9 | 419,20 |
| 171117 | SNI 30 | TPU | 50 | 70 | 11 | 10 | 419,20 |
| 15941 | SNI 30 | TPU | 50 | 70 | 13 | 12 | 419,20 |
| 125147 | SNI 30 | TPU | 50,8 | 63,5 | 10,31 | 9,52 | 419,20 |
| 49540 | SNI 30 | TPU | 52 | 62 | 11 | 10 | 419,20 |
| 56791 | SNI 30 | TPU | 55 | 63 | 9 | 8 | 419,20 |
| 16086 | SNI 30 | TPU | 55 | 63 | 13 | 12 | 419,20 |
| 16087 | SNI 30 | TPU | 55 | 65 | 8 | 7 | 419,20 |
| 15982 | SNI 30 | TPU | 55 | 65 | 11 | 10 | 419,20 |
| 15942 | SNI 30 | TPU | 55 | 65 | 13 | 12 | 419,20 |
| 171118 | SNI 30 | TPU | 55 | 65 | 14,5 | 13,5 | 419,20 |
| 16183 | SNI 30 | TPU | 55 | 67 | 11 | 10 | 419,20 |
| 171119 | SNI 30 | TPU | 55 | 68 | 11 | 10,5 | 419,20 |
| 15983 | SNI 30 | TPU | 55 | 70 | 11 | 10 | 419,20 |
| 15984 | SNI 30 | TPU | 55 | 70 | 13 | 12 | 419,20 |
| 171120 | SNI 30 | TPU | 55 | 75 | 13 | 12 | 419,20 |
| 16088 | SNI 30 | TPU | 55 | 75 | 14,5 | 13,5 | 419,20 |
| 15943 | SNI 30 | TPU | 56 | 66 | 11 | 10 | 419,20 |
| 15944 | SNI 30 | TPU | 56 | 71 | 11 | 10 | 419,20 |
| 16089 | SNI 30 | TPU | 56 | 71 | 12,5 | 11,5 | 419,20 |
| 171121 | SNI 30 | TPU | 56 | 76 | 13 | 12 | 452,92 |
| 171122 | SNI 30 | TPU | 56 | 76 | 14,5 | 13,5 | 452,92 |
| 171123 | SNI 30 | TPU | 56 | 76 | 16 | 15 | 452,92 |
| 16092 | SNI 30 | TPU | 60 | 70 | 8 | 7 | 452,92 |
| 15986 | SNI 30 | TPU | 60 | 70 | 11 | 10 | 452,92 |
| 15987 | SNI 30 | TPU | 60 | 70 | 13 | 12 | 452,92 |
| 125692 | SNI 30 | TPU | 60 | 70 | 14 | 13 | 452,92 |
| 171124 | SNI 30 | TPU | 60 | 72 | 9 | 8 | 452,92 |
| 171125 | SNI 30 | TPU | 60 | 72 | 10 | 9 | 452,92 |
| 15988 | SNI 30 | TPU | 60 | 75 | 11 | 10 | 452,92 |
| 43028 | SNI 30 | TPU | 60 | 75 | 12,5 | 11,5 | 452,92 |
| 15946 | SNI 30 | TPU | 60 | 75 | 13 | 12 | 452,92 |
| 171126 | SNI 30 | TPU | 60 | 77 | 12 | 11 | 452,92 |
| 15947 | SNI 30 | TPU | 60 | 80 | 13 | 12 | 497,14 |
| 171127 | SNI 30 | TPU | 60 | 80 | 14,5 | 13,5 | 497,14 |
| 171128 | SNI 30 | TPU | 62 | 74 | 14 | 13 | 452,92 |
| 171129 | SNI 30 | TPU | 63 | 73 | 11 | 10 | 452,92 |
| 15948 | SNI 30 | TPU | 63 | 73 | 13 | 12 | 452,92 |
| 116125 | SNI 30 | TPU | 63 | 75 | 9,6 | 8,6 | 476,09 |
| 15949 | SNI 30 | TPU | 63 | 78 | 11 | 10 | 476,09 |
| 16100 | SNI 30 | TPU | 63 | 78 | 12,5 | 11,5 | 476,09 |
| 171130 | SNI 30 | TPU | 63 | 78 | 13 | 12 | 476,09 |

# GUARNIZIONE STELO - SNI 30

| CODICE | TIPO | MAT. | d mm | D mm | L mm | H mm | LISTINO 5-2016 X 100 PCS € |
|---|---|---|---|---|---|---|---|
| 15950 | SNI 30 | TPU | 63 | 83 | 13 | 12 | 497,14 |
| 171131 | SNI 30 | TPU | 63 | 83 | 14,5 | 13,5 | 497,14 |
| 16103 | SNI 30 | TPU | 63 | 83 | 16 | 15 | 497,14 |
| 16184 | SNI 30 | TPU | 65 | 75 | 11 | 10 | 476,09 |
| 15989 | SNI 30 | TPU | 65 | 75 | 13 | 12 | 476,09 |
| 171133 | SNI 30 | TPU | 65 | 75 | 14,5 | 13,5 | 476,09 |
| 171134 | SNI 30 | TPU | 65 | 77 | 10 | 9 | 476,09 |
| 46040 | SNI 30 | TPU | 65 | 78 | 11 | 10 | 476,09 |
| 171136 | SNI 30 | TPU | 65 | 80 | 11 | 10 | 497,14 |
| 15991 | SNI 30 | TPU | 65 | 80 | 13 | 12 | 497,14 |
| 15992 | SNI 30 | TPU | 65 | 85 | 13 | 12 | 497,14 |
| 16106 | SNI 30 | TPU | 65 | 85 | 14,5 | 13,5 | 497,14 |
| 80781 | SNI 30 | TPU | 69,85 | 82,55 | 10,31 | 9,52 | 497,14 |
| 22433 | SNI 30 | TPU | 70 | 80 | 6,5 | 6 | 497,14 |
| 16107 | SNI 30 | TPU | 70 | 80 | 8 | 7,2 | 497,14 |
| 16108 | SNI 30 | TPU | 70 | 80 | 11 | 10 | 497,14 |
| 15951 | SNI 30 | TPU | 70 | 80 | 13 | 12 | 497,14 |
| 116124 | SNI 30 | TPU | 70 | 82 | 9,6 | 8,6 | 497,14 |
| 15952 | SNI 30 | TPU | 70 | 85 | 11 | 10 | 497,14 |
| 16109 | SNI 30 | TPU | 70 | 85 | 12,5 | 11,5 | 497,14 |
| 15953 | SNI 30 | TPU | 70 | 85 | 13 | 12 | 497,14 |
| 15954 | SNI 30 | TPU | 70 | 90 | 13 | 12 | 509,79 |
| 16111 | SNI 30 | TPU | 70 | 90 | 16 | 15 | 509,79 |
| 171139 | SNI 30 | TPU | 73 | 82,5 | 8 | 7,5 | 520,32 |
| 16113 | SNI 30 | TPU | 75 | 85 | 8 | 7,2 | 520,32 |
| 15993 | SNI 30 | TPU | 75 | 85 | 13 | 12 | 520,32 |
| 22684 | SNI 30 | TPU | 75 | 87 | 9,6 | 8,6 | 520,32 |
| 15994 | SNI 30 | TPU | 75 | 90 | 11 | 10 | 520,32 |
| 15995 | SNI 30 | TPU | 75 | 90 | 13 | 12 | 520,32 |
| 171140 | SNI 30 | TPU | 75 | 95 | 13 | 12 | 520,32 |
| 16115 | SNI 30 | TPU | 75 | 95 | 14,5 | 13,5 | 520,32 |
| 16116 | SNI 30 | TPU | 76 | 84 | 8,5 | 7,5 | 520,32 |
| 16117 | SNI 30 | TPU | 80 | 90 | 8 | 7,2 | 520,32 |
| 73786 | SNI 30 | TPU | 80 | 90 | 11 | 10,5 | 520,32 |
| 15955 | SNI 30 | TPU | 80 | 90 | 13 | 12 | 520,32 |
| 171141 | SNI 30 | TPU | 80 | 90 | 15 | 14 | 520,32 |
| 80850 | SNI 30 | TPU | 80 | 92 | 9,6 | 8,6 | 520,32 |
| 46154 | SNI 30 | TPU | 80 | 93 | 11 | 10 | 520,32 |
| 15956 | SNI 30 | TPU | 80 | 95 | 11 | 10 | 520,32 |
| 16119 | SNI 30 | TPU | 80 | 95 | 12,5 | 11,5 | 520,32 |
| 15957 | SNI 30 | TPU | 80 | 95 | 13 | 12 | 520,32 |
| 15958 | SNI 30 | TPU | 80 | 100 | 13 | 12 | 577,20 |
| 16120 | SNI 30 | TPU | 80 | 100 | 14,5 | 13,5 | 577,20 |
| 171142 | SNI 30 | TPU | 80 | 100 | 16 | 15 | 577,20 |
| 171143 | SNI 30 | TPU | 85 | 95 | 8 | 7,2 | 577,20 |
| 171144 | SNI 30 | TPU | 85 | 100 | 12 | 11 | 577,20 |
| 76464 | SNI 30 | TPU | 85 | 100 | 12,5 | 11,5 | 577,20 |
| 15996 | SNI 30 | TPU | 85 | 100 | 13 | 12 | 577,20 |
| 171145 | SNI 30 | TPU | 85 | 105 | 13 | 12 | 577,20 |

# GUARNIZIONE STELO - SNI 30

TPU

| CODICE | TIPO | MAT. | d mm | D mm | L mm | H mm | LISTINO 5-2016 X 100 PCS € |
|---|---|---|---|---|---|---|---|
| 16124 | SNI 30 | TPU | 85 | 105 | 14,5 | 13,5 | 577,20 |
| 4854 | SNI 30 | TPU | 90 | 100 | 11 | 10 | 577,20 |
| 171146 | SNI 30 | TPU | 90 | 100 | 12,5 | 11,5 | 577,20 |
| 125043 | SNI 30 | TPU | 90 | 102 | 10 | 9 | 577,20 |
| 16126 | SNI 30 | TPU | 90 | 105 | 9,5 | 8,5 | 577,20 |
| 46039 | SNI 30 | TPU | 90 | 105 | 11 | 10 | 577,20 |
| 16127 | SNI 30 | TPU | 90 | 105 | 12,5 | 11,5 | 577,20 |
| 15959 | SNI 30 | TPU | 90 | 105 | 13 | 12 | 577,20 |
| 15960 | SNI 30 | TPU | 90 | 110 | 13 | 12 | 621,43 |
| 16128 | SNI 30 | TPU | 90 | 110 | 16 | 15 | 621,43 |
| 171147 | SNI 30 | TPU | 91 | 99 | 8,5 | 8 | 621,43 |
| 169573 | SNI 30 | TPU | 93 | 104 | 11 | 10,5 | 621,43 |
| 169571 | SNI 30 | TPU | 95 | 105 | 11 | 10 | 621,43 |
| 169157 | SNI 30 | TPU | 95 | 105 | 13 | 12 | 621,43 |
| 125045 | SNI 30 | TPU | 95 | 110 | 10 | 9 | 621,43 |
| 43053 | SNI 30 | TPU | 95 | 110 | 13 | 12 | 621,43 |
| 16131 | SNI 30 | TPU | 95 | 115 | 13 | 12 | 621,43 |
| 169360 | SNI 30 | TPU | 100 | 110 | 15 | 14 | 657,25 |
| 169359 | SNI 30 | TPU | 100 | 113 | 13,5 | 13 | 702,20 |
| 169403 | SNI 30 | TPU | 100 | 115 | 10 | 9 | 702,20 |
| 125046 | SNI 30 | TPU | 100 | 115 | 11 | 10 | 702,20 |
| 16133 | SNI 30 | TPU | 100 | 115 | 11,5 | 10,5 | 702,20 |
| 80238 | SNI 30 | TPU | 100 | 115 | 12 | 11 | 702,20 |
| 15961 | SNI 30 | TPU | 100 | 115 | 13 | 12 | 702,20 |
| 15962 | SNI 30 | TPU | 100 | 120 | 13 | 12 | 702,20 |
| 169402 | SNI 30 | TPU | 100 | 120 | 14,5 | 13,5 | 702,20 |
| 15963 | SNI 30 | TPU | 100 | 120 | 16 | 15 | 702,20 |
| 169458 | SNI 30 | TPU | 100 | 125 | 20 | 19 | 702,20 |
| 169457 | SNI 30 | TPU | 105 | 115 | 11 | 10 | 702,20 |
| 169546 | SNI 30 | TPU | 105 | 115 | 12,5 | 11,5 | 702,20 |
| 169545 | SNI 30 | TPU | 105 | 115 | 14,5 | 13,5 | 702,20 |
| 169542 | SNI 30 | TPU | 105 | 120 | 13 | 12 | 702,20 |
| 169541 | SNI 30 | TPU | 105 | 125 | 13 | 12 | 702,20 |
| 73794 | SNI 30 | TPU | 110 | 120 | 13 | 12 | 702,20 |
| 125048 | SNI 30 | TPU | 110 | 125 | 10,6 | 9,6 | 735,20 |
| 16139 | SNI 30 | TPU | 110 | 125 | 12 | 11 | 735,20 |
| 169547 | SNI 30 | TPU | 110 | 125 | 16 | 15 | 735,20 |
| 15966 | SNI 30 | TPU | 110 | 130 | 13 | 12 | 808,78 |
| 15967 | SNI 30 | TPU | 110 | 130 | 16 | 15 | 808,78 |
| 169538 | SNI 30 | TPU | 110 | 135 | 20 | 19 | 832,28 |
| 169537 | SNI 30 | TPU | 115 | 135 | 13 | 12 | 832,28 |
| 169552 | SNI 30 | TPU | 120 | 130 | 8 | 7,2 | 808,78 |
| 16143 | SNI 30 | TPU | 120 | 130 | 12,5 | 11,5 | 808,78 |
| 169564 | SNI 30 | TPU | 120 | 132 | 11 | 10,5 | 808,78 |
| 169563 | SNI 30 | TPU | 120 | 135 | 12,5 | 11,5 | 832,28 |
| 15998 | SNI 30 | TPU | 120 | 135 | 16 | 15 | 832,28 |
| 15999 | SNI 30 | TPU | 120 | 140 | 13 | 12 | 1.007,99 |
| 16000 | SNI 30 | TPU | 120 | 140 | 16 | 15 | 1.007,99 |
| 171155 | SNI 30 | TPU | 125 | 135 | 14,5 | 13,5 | 832,28 |

TPU

# GUARNIZIONE STELO - SNI 30

| CODICE | TIPO | MAT. | d mm | D mm | L mm | H mm | LISTINO 5-2016 X 100 PCS € |
|---|---|---|---|---|---|---|---|
| 15969 | SNI 30 | TPU | 125 | 145 | 13 | 12 | 1.045,00 |
| 15968 | SNI 30 | TPU | 125 | 145 | 16 | 15 | 1.045,00 |
| 171156 | SNI 30 | TPU | 125 | 150 | 15 | 14 | 1.214,85 |
| 171157 | SNI 30 | TPU | 125 | 150 | 20 | 19 | 1.214,85 |
| 16147 | SNI 30 | TPU | 130 | 140 | 8 | 7,2 | 1.007,99 |
| 171158 | SNI 30 | TPU | 130 | 140 | 14,5 | 13,5 | 1.007,99 |
| 6550 | SNI 30 | TPU | 130 | 145 | 13 | 12 | 1.045,00 |
| 16148 | SNI 30 | TPU | 130 | 145 | 15 | 14 | 1.045,00 |
| 171159 | SNI 30 | TPU | 130 | 150 | 13 | 12 | 1.214,85 |
| 16002 | SNI 30 | TPU | 130 | 150 | 16 | 15 | 1.214,85 |
| 171160 | SNI 30 | TPU | 140 | 150 | 12,5 | 11,5 | 1.214,85 |
| 16151 | SNI 30 | TPU | 140 | 155 | 13 | 12 | 1.467,95 |
| 15971 | SNI 30 | TPU | 140 | 160 | 13 | 12 | 1.467,95 |
| 15972 | SNI 30 | TPU | 140 | 160 | 16 | 15 | 1.467,95 |
| 16153 | SNI 30 | TPU | 140 | 165 | 20 | 19 | 1.467,95 |
| 76474 | SNI 30 | TPU | 145 | 157,7 | 10 | 9 | 1.467,95 |
| 73798 | SNI 30 | TPU | 150 | 160 | 14,5 | 13,5 | 1.467,95 |
| 16156 | SNI 30 | TPU | 150 | 170 | 13 | 12 | 1.529,82 |
| 16003 | SNI 30 | TPU | 150 | 170 | 16 | 15 | 1.529,82 |
| 171162 | SNI 30 | TPU | 160 | 170 | 13 | 12 | 1.529,82 |
| 171163 | SNI 30 | TPU | 160 | 180 | 13 | 12 | 1.652,43 |
| 15973 | SNI 30 | TPU | 160 | 180 | 16 | 15 | 1.652,43 |
| 80240 | SNI 30 | TPU | 160 | 185 | 16 | 15 | 2.131,62 |
| 35465 | SNI 30 | TPU | 160 | 190 | 19 | 18 | 2.131,62 |
| 171164 | SNI 30 | TPU | 170 | 190 | 13 | 12 | 2.131,62 |
| 16004 | SNI 30 | TPU | 170 | 190 | 16 | 15 | 2.131,62 |
| 171165 | SNI 30 | TPU | 180 | 200 | 13 | 12 | 2.705,30 |
| 15974 | SNI 30 | TPU | 180 | 200 | 16 | 15 | 2.705,30 |
| 16161 | SNI 30 | TPU | 180 | 200 | 20 | 19 | 2.705,30 |
| 125053 | SNI 30 | TPU | 180 | 205 | 16 | 15 | 2.941,52 |
| 171166 | SNI 30 | TPU | 190 | 210 | 13 | 12,5 | 2.941,52 |
| 16163 | SNI 30 | TPU | 190 | 210 | 16 | 15 | 2.941,52 |
| 16164 | SNI 30 | TPU | 200 | 220 | 13 | 12 | 3.272,74 |
| 171169 | SNI 30 | TPU | 200 | 220 | 16 | 15 | 3.272,74 |
| 171170 | SNI 30 | TPU | 200 | 225 | 16 | 15 | 3.599,45 |
| 16165 | SNI 30 | TPU | 200 | 225 | 20 | 19 | 3.599,45 |
| 16005 | SNI 30 | TPU | 210 | 230 | 16 | 15 | 3.599,45 |
| 15976 | SNI 30 | TPU | 220 | 240 | 16 | 15 | 4.088,88 |

# Guarnizione stelo

TPU

SNI 39

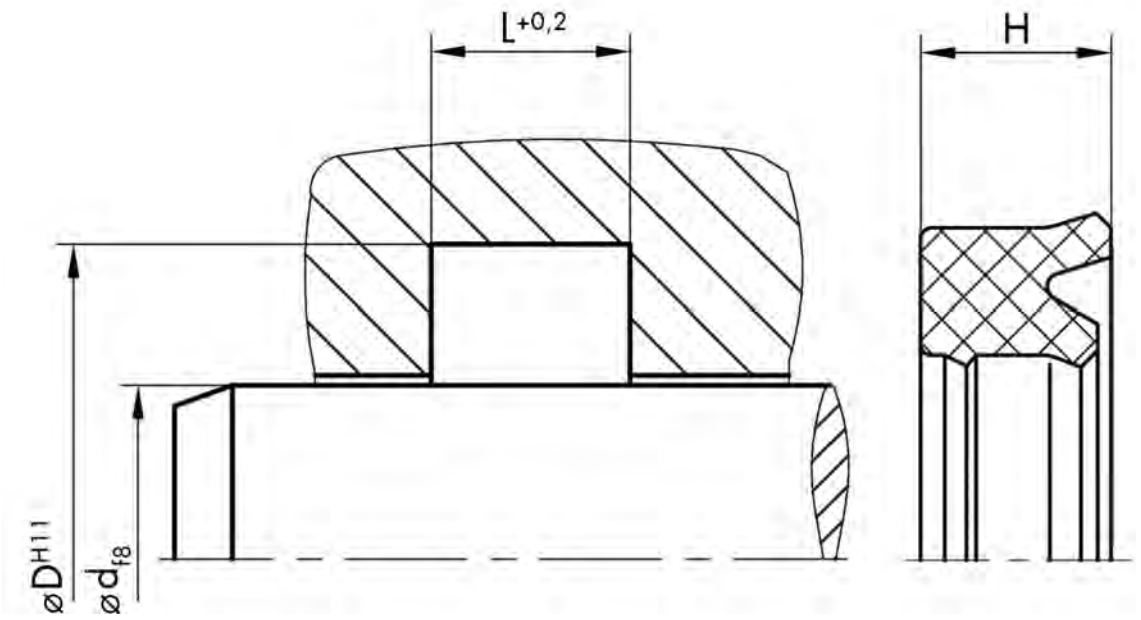
L+0,2
H
øDH11
ød f8

TPU

# GUARNIZIONE STELO - SNI 39

| CODICE | TIPO | MAT. | d mm | D mm | L mm | H mm | LISTINO 5-2016 X 100 PCS € |
|---|---|---|---|---|---|---|---|
| 125056 | SNI 39 | TPU | 8 | 16 | 6,3 | 5,7 | 182,53 |
| 80268 | SNI 39 | TPU | 8 | 16 | 6,5 | 5,5 | 182,53 |
| 159096 | SNI 39 | TPU | 9,52 | 19,05 | 8,72 | 7,93 | 182,53 |
| 46908 | SNI 39 | TPU | 10 | 16 | 5,3 | 4,5 | 182,53 |
| 125059 | SNI 39 | TPU | 10 | 18 | 6,3 | 5,7 | 182,53 |
| 80272 | SNI 39 | TPU | 10 | 18 | 6,5 | 5,5 | 182,53 |
| 80271 | SNI 39 | TPU | 10 | 20 | 8 | 7 | 182,53 |
| 125060 | SNI 39 | TPU | 12 | 20 | 6,3 | 5,7 | 182,53 |
| 125061 | SNI 39 | TPU | 12 | 20 | 6,5 | 5,5 | 182,53 |
| 80275 | SNI 39 | TPU | 12 | 20 | 9 | 8 | 182,53 |
| 125062 | SNI 39 | TPU | 12 | 22 | 8 | 7,3 | 182,53 |
| 159097 | SNI 39 | TPU | 12,7 | 19,05 | 6,35 | 4,76 | 182,53 |
| 125063 | SNI 39 | TPU | 14 | 22 | 6,3 | 5,7 | 182,53 |
| 80277 | SNI 39 | TPU | 14 | 22 | 6,5 | 5,5 | 182,53 |
| 120825 | SNI 39 | TPU | 14 | 24 | 8 | 7,3 | 231,93 |
| 159098 | SNI 39 | TPU | 14,28 | 20,63 | 6,35 | 4,76 | 231,92 |
| 80276 | SNI 39 | TPU | 15 | 25 | 9 | 8 | 233,05 |
| 170883 | SNI 39 | TPU | 15 | 26 | 8 | 7,5 | 231,93 |
| 68107 | SNI 39 | TPU | 15,4 | 25,5 | 7,4 | 6,5 | 231,93 |
| 159099 | SNI 39 | TPU | 15,87 | 22,22 | 6,35 | 4,76 | 231,92 |
| 125064 | SNI 39 | TPU | 16 | 24 | 6,3 | 5,8 | 231,93 |
| 80280 | SNI 39 | TPU | 16 | 24 | 6,5 | 5,5 | 231,92 |
| 80283 | SNI 39 | TPU | 16 | 26 | 8 | 7,3 | 257,70 |
| 80281 | SNI 39 | TPU | 16 | 26 | 9 | 8 | 257,70 |
| 159101 | SNI 39 | TPU | 17,46 | 23,81 | 6,35 | 4,76 | 257,70 |
| 89161 | SNI 39 | TPU | 18 | 25 | 5,5 | 5 | 257,70 |
| 80278 | SNI 39 | TPU | 18 | 26 | 6,3 | 5,5 | 257,70 |
| 68108 | SNI 39 | TPU | 18 | 26 | 7 | 6,3 | 257,70 |
| 170884 | SNI 39 | TPU | 18 | 26 | 7 | 6,5 | 257,70 |
| 170885 | SNI 39 | TPU | 18 | 26 | 9 | 8,5 | 257,70 |
| 80284 | SNI 39 | TPU | 18 | 28 | 8 | 7,3 | 257,70 |
| 80282 | SNI 39 | TPU | 18 | 28 | 9 | 8 | 257,70 |
| 159103 | SNI 39 | TPU | 19,05 | 25,4 | 6,35 | 4,76 | 270,59 |
| 159104 | SNI 39 | TPU | 19,05 | 25,4 | 7,14 | 6,35 | 270,59 |
| 159105 | SNI 39 | TPU | 19,05 | 28,57 | 8,72 | 7,93 | 270,59 |
| 170886 | SNI 39 | TPU | 19,5 | 27,5 | 9 | 8,5 | 270,58 |
| 89162 | SNI 39 | TPU | 20 | 26 | 5,3 | 4,8 | 257,70 |
| 119003 | SNI 39 | TPU | 20 | 28 | 6,5 | 5,5 | 257,70 |
| 80287 | SNI 39 | TPU | 20 | 30 | 8 | 7 | 268,44 |
| 82079 | SNI 39 | TPU | 20 | 30 | 9 | 8 | 268,43 |
| 80288 | SNI 39 | TPU | 20 | 30 | 11 | 10 | 268,44 |
| 80289 | SNI 39 | TPU | 20 | 35 | 11 | 10 | 268,44 |
| 159106 | SNI 39 | TPU | 20,63 | 26,98 | 6,35 | 4,76 | 268,44 |
| 159107 | SNI 39 | TPU | 20,63 | 26,98 | 7,14 | 6,35 | 268,44 |
| 152165 | SNI 39 | TPU | 22 | 30 | 6,3 | 5,7 | 268,43 |
| 6294 | SNI 39 | TPU | 22 | 30 | 7 | 6 | 268,44 |
| 170887 | SNI 39 | TPU | 22 | 32 | 7 | 6 | 294,21 |
| 125065 | SNI 39 | TPU | 22 | 32 | 8 | 7,3 | 294,21 |
| 125066 | SNI 39 | TPU | 22 | 35 | 11 | 10 | 294,21 |

# GUARNIZIONE STELO - SNI 39

TPU

| CODICE | TIPO | MAT. | d mm | D mm | L mm | H mm | LISTINO 5-2016 X 100 PCS € |
|---|---|---|---|---|---|---|---|
| 159108 | SNI 39 | TPU | 22,22 | 28,57 | 6,35 | 4,76 | 294,21 |
| 159109 | SNI 39 | TPU | 22,22 | 28,57 | 7,14 | 6,35 | 294,21 |
| 89163 | SNI 39 | TPU | 25 | 32 | 11 | 10 | 294,21 |
| 170890 | SNI 39 | TPU | 25 | 33 | 6,3 | 4,8 | 294,21 |
| 80920 | SNI 39 | TPU | 25 | 33 | 6,5 | 5,5 | 294,20 |
| 68112 | SNI 39 | TPU | 25 | 33 | 7,3 | 6,5 | 294,20 |
| 170889 | SNI 39 | TPU | 25 | 33 | 7,5 | 7 | 294,21 |
| 170888 | SNI 39 | TPU | 25 | 33 | 8 | 7,3 | 294,20 |
| 80380 | SNI 39 | TPU | 25 | 33 | 11 | 10 | 294,20 |
| 80290 | SNI 39 | TPU | 25 | 35 | 8 | 7 | 294,21 |
| 125068 | SNI 39 | TPU | 25 | 35 | 8 | 7,3 | 294,20 |
| 89164 | SNI 39 | TPU | 25 | 35 | 9 | 8 | 294,20 |
| 80291 | SNI 39 | TPU | 25 | 35 | 11 | 10 | 294,20 |
| 80296 | SNI 39 | TPU | 25 | 40 | 11 | 10 | 294,21 |
| 80315 | SNI 39 | TPU | 25 | 45 | 13 | 12 | 294,21 |
| 159110 | SNI 39 | TPU | 25,4 | 31,75 | 6,35 | 4,76 | 294,21 |
| 159111 | SNI 39 | TPU | 25,4 | 31,75 | 7,14 | 6,35 | 294,21 |
| 159112 | SNI 39 | TPU | 25,4 | 34,92 | 7,14 | 6,35 | 294,21 |
| 159113 | SNI 39 | TPU | 25,4 | 34,92 | 8,72 | 7,93 | 294,21 |
| 159114 | SNI 39 | TPU | 25,4 | 38,1 | 10,31 | 9,52 | 294,21 |
| 159115 | SNI 39 | TPU | 26,98 | 33,34 | 6,35 | 4,76 | 294,21 |
| 125069 | SNI 39 | TPU | 28 | 36 | 8 | 7,3 | 294,21 |
| 125071 | SNI 39 | TPU | 28 | 38 | 8 | 0 | 294,21 |
| 125070 | SNI 39 | TPU | 28 | 38 | 8 | 7,3 | 294,20 |
| 80293 | SNI 39 | TPU | 28 | 38 | 11 | 10 | 294,21 |
| 159116 | SNI 39 | TPU | 28,57 | 34,92 | 6,35 | 4,76 | 304,94 |
| 159117 | SNI 39 | TPU | 28,57 | 34,92 | 7,14 | 6,35 | 304,94 |
| 159118 | SNI 39 | TPU | 28,57 | 38,1 | 8,72 | 7,93 | 304,94 |
| 159119 | SNI 39 | TPU | 28,57 | 41,27 | 7,14 | 6,35 | 304,94 |
| 170891 | SNI 39 | TPU | 30 | 38 | 6,3 | 4,8 | 304,94 |
| 170892 | SNI 39 | TPU | 30 | 40 | 7,5 | 7 | 304,94 |
| 68114 | SNI 39 | TPU | 30 | 40 | 8 | 7,3 | 304,94 |
| 80297 | SNI 39 | TPU | 30 | 40 | 11 | 10 | 317,83 |
| 80298 | SNI 39 | TPU | 30 | 45 | 11 | 10 | 377,95 |
| 159120 | SNI 39 | TPU | 30,16 | 39,68 | 7,14 | 6,35 | 377,95 |
| 159121 | SNI 39 | TPU | 31,75 | 38,1 | 7,14 | 6,35 | 377,95 |
| 159122 | SNI 39 | TPU | 31,75 | 41,27 | 6,35 | 4,76 | 377,95 |
| 159123 | SNI 39 | TPU | 31,75 | 41,27 | 7,14 | 6,35 | 377,95 |
| 159124 | SNI 39 | TPU | 31,75 | 41,27 | 8,72 | 7,93 | 377,95 |
| 159125 | SNI 39 | TPU | 31,75 | 44,45 | 7,14 | 6,35 | 377,95 |
| 159126 | SNI 39 | TPU | 31,75 | 44,45 | 10,31 | 9,52 | 377,95 |
| 68115 | SNI 39 | TPU | 32 | 40 | 7,5 | 6,7 | 317,83 |
| 170893 | SNI 39 | TPU | 32 | 40 | 7,7 | 7,2 | 317,83 |
| 80299 | SNI 39 | TPU | 32 | 40 | 9 | 8 | 317,83 |
| 68116 | SNI 39 | TPU | 32 | 41,5 | 8,9 | 7,9 | 317,83 |
| 125074 | SNI 39 | TPU | 32 | 42 | 8 | 7,3 | 317,83 |
| 80303 | SNI 39 | TPU | 32 | 42 | 11 | 10 | 317,83 |
| 80304 | SNI 39 | TPU | 32 | 45 | 11 | 10 | 317,83 |
| 125075 | SNI 39 | TPU | 32 | 47 | 11 | 10 | 317,83 |

| CODICE | TIPO | MAT. | d mm | D mm | L mm | H mm | LISTINO 5-2016 X 100 PCS € |
|---|---|---|---|---|---|---|---|
| 159127 | SNI 39 | TPU | 34,92 | 41,27 | 7,14 | 6,35 | 367,21 |
| 159128 | SNI 39 | TPU | 34,92 | 44,45 | 6,35 | 4,76 | 367,21 |
| 159129 | SNI 39 | TPU | 34,92 | 44,45 | 8,72 | 7,93 | 367,21 |
| 159130 | SNI 39 | TPU | 34,92 | 47,62 | 10,31 | 9,52 | 367,21 |
| 170894 | SNI 39 | TPU | 35 | 43 | 8 | 7,2 | 367,22 |
| 125077 | SNI 39 | TPU | 35 | 45 | 8 | 7 | 390,84 |
| 89169 | SNI 39 | TPU | 35 | 45 | 9 | 8 | 390,83 |
| 80305 | SNI 39 | TPU | 35 | 45 | 11 | 10 | 403,72 |
| 89170 | SNI 39 | TPU | 35 | 50 | 11 | 10 | 403,72 |
| 68118 | SNI 39 | TPU | 36 | 44 | 7 | 6,3 | 377,95 |
| 76441 | SNI 39 | TPU | 36 | 46 | 8 | 7 | 377,95 |
| 125078 | SNI 39 | TPU | 36 | 46 | 8 | 7,3 | 377,95 |
| 80308 | SNI 39 | TPU | 36 | 46 | 8,5 | 7,5 | 377,95 |
| 81952 | SNI 39 | TPU | 36 | 46 | 11 | 10 | 377,95 |
| 80309 | SNI 39 | TPU | 36 | 51 | 11 | 10 | 403,72 |
| 80306 | SNI 39 | TPU | 36 | 56 | 13 | 12 | 403,72 |
| 159131 | SNI 39 | TPU | 36,51 | 46,04 | 8,72 | 7,93 | 403,72 |
| 80310 | SNI 39 | TPU | 37 | 47 | 9 | 8 | 403,72 |
| 80311 | SNI 39 | TPU | 38 | 55 | 11 | 10 | 403,72 |
| 159132 | SNI 39 | TPU | 38,1 | 44,45 | 7,14 | 6,35 | 403,72 |
| 159133 | SNI 39 | TPU | 38,1 | 47,62 | 6,35 | 4,76 | 403,72 |
| 159134 | SNI 39 | TPU | 38,1 | 47,62 | 7,14 | 6,35 | 403,72 |
| 159135 | SNI 39 | TPU | 38,1 | 47,62 | 8,72 | 7,93 | 403,72 |
| 159136 | SNI 39 | TPU | 38,1 | 47,62 | 10,31 | 9,52 | 403,72 |
| 159137 | SNI 39 | TPU | 38,1 | 50,8 | 7,14 | 6,35 | 403,72 |
| 159138 | SNI 39 | TPU | 38,1 | 50,8 | 10,31 | 9,52 | 403,72 |
| 159139 | SNI 39 | TPU | 38,1 | 53,97 | 10,31 | 9,52 | 403,72 |
| 125079 | SNI 39 | TPU | 40 | 48 | 6,3 | 5,7 | 403,72 |
| 68119 | SNI 39 | TPU | 40 | 49,5 | 10,5 | 9,5 | 403,72 |
| 68120 | SNI 39 | TPU | 40 | 50 | 8 | 7 | 403,73 |
| 78880 | SNI 39 | TPU | 40 | 50 | 11 | 10 | 403,72 |
| 68121 | SNI 39 | TPU | 40 | 55 | 11 | 10 | 427,35 |
| 80312 | SNI 39 | TPU | 40 | 55 | 12,5 | 11,5 | 403,72 |
| 80313 | SNI 39 | TPU | 40 | 60 | 13 | 12 | 403,72 |
| 159140 | SNI 39 | TPU | 41,27 | 47,62 | 7,14 | 6,35 | 403,72 |
| 159141 | SNI 39 | TPU | 41,27 | 50,8 | 7,93 | 7,14 | 403,72 |
| 159142 | SNI 39 | TPU | 41,27 | 50,8 | 8,72 | 7,93 | 403,72 |
| 159144 | SNI 39 | TPU | 41,27 | 53,97 | 10,31 | 9,52 | 403,72 |
| 36691 | SNI 39 | TPU | 42 | 50 | 12,5 | 11,5 | 403,72 |
| 89171 | SNI 39 | TPU | 42 | 52 | 11 | 10 | 403,72 |
| 68123 | SNI 39 | TPU | 42 | 53 | 10 | 9 | 427,35 |
| 159145 | SNI 39 | TPU | 44,45 | 50,8 | 7,14 | 6,35 | 427,35 |
| 159146 | SNI 39 | TPU | 44,45 | 53,97 | 7,14 | 6,35 | 440,23 |
| 159148 | SNI 39 | TPU | 44,45 | 53,97 | 8,72 | 7,93 | 440,23 |
| 159149 | SNI 39 | TPU | 44,45 | 53,97 | 10,31 | 9,52 | 440,23 |
| 159150 | SNI 39 | TPU | 44,45 | 57,15 | 7,14 | 6,35 | 440,23 |
| 159151 | SNI 39 | TPU | 44,45 | 57,15 | 10,31 | 9,52 | 440,23 |
| 159152 | SNI 39 | TPU | 44,45 | 57,15 | 14,3 | 12,7 | 440,23 |
| 125081 | SNI 39 | TPU | 45 | 53 | 6,3 | 5,6 | 403,72 |

# GUARNIZIONE STELO - SNI 39

TPU

| CODICE | TIPO | MAT. | d mm | D mm | L mm | H mm | LISTINO 5-2016 X 100 PCS € |
|---|---|---|---|---|---|---|---|
| 68125 | SNI 39 | TPU | 45 | 53 | 12,5 | 11,5 | 427,35 |
| 125082 | SNI 39 | TPU | 45 | 55 | 8 | 7 | 427,35 |
| 22938 | SNI 39 | TPU | 45 | 55 | 11 | 10 | 427,35 |
| 170895 | SNI 39 | TPU | 45 | 55 | 12,5 | 11,5 | 427,35 |
| 68127 | SNI 39 | TPU | 45 | 57,7 | 10,5 | 9,5 | 427,35 |
| 78881 | SNI 39 | TPU | 45 | 60 | 11 | 10 | 440,23 |
| 125083 | SNI 39 | TPU | 45 | 60 | 12,5 | 11,5 | 440,23 |
| 89172 | SNI 39 | TPU | 45 | 65 | 11 | 10 | 440,23 |
| 159153 | SNI 39 | TPU | 47,62 | 57,15 | 10,31 | 9,52 | 440,23 |
| 68129 | SNI 39 | TPU | 48 | 56 | 12,5 | 11,5 | 427,35 |
| 170896 | SNI 39 | TPU | 48 | 56 | 13 | 12 | 427,35 |
| 42379 | SNI 39 | TPU | 48 | 63 | 11 | 10 | 440,23 |
| 80323 | SNI 39 | TPU | 48 | 68 | 13 | 12 | 440,23 |
| 170897 | SNI 39 | TPU | 50 | 57 | 11 | 10 | 427,35 |
| 76449 | SNI 39 | TPU | 50 | 58 | 12,5 | 11,5 | 440,23 |
| 125085 | SNI 39 | TPU | 50 | 60 | 8 | 7,3 | 440,23 |
| 80320 | SNI 39 | TPU | 50 | 60 | 11 | 10 | 440,23 |
| 80319 | SNI 39 | TPU | 50 | 62 | 11 | 10 | 440,23 |
| 68135 | SNI 39 | TPU | 50 | 62,7 | 10,5 | 9,5 | 453,12 |
| 68136 | SNI 39 | TPU | 50 | 65 | 11 | 10 | 453,12 |
| 46914 | SNI 39 | TPU | 50 | 65 | 12 | 11 | 453,12 |
| 125086 | SNI 39 | TPU | 50 | 65 | 12,5 | 11,5 | 453,12 |
| 68139 | SNI 39 | TPU | 50 | 65 | 16,5 | 15,5 | 453,12 |
| 46915 | SNI 39 | TPU | 50 | 70 | 13 | 12 | 489,62 |
| 170898 | SNI 39 | TPU | 50 | 70 | 15 | 14 | 489,62 |
| 159155 | SNI 39 | TPU | 50,8 | 57,15 | 7,14 | 6,35 | 453,12 |
| 159156 | SNI 39 | TPU | 50,8 | 60,32 | 7,14 | 6,35 | 453,12 |
| 159157 | SNI 39 | TPU | 50,8 | 60,32 | 8,72 | 7,93 | 453,12 |
| 159158 | SNI 39 | TPU | 50,8 | 60,32 | 10,31 | 9,52 | 453,12 |
| 159159 | SNI 39 | TPU | 50,8 | 63,5 | 7,14 | 6,35 | 453,12 |
| 159160 | SNI 39 | TPU | 50,8 | 63,5 | 8,72 | 7,93 | 453,12 |
| 159161 | SNI 39 | TPU | 50,8 | 63,5 | 10,31 | 9,52 | 453,12 |
| 159162 | SNI 39 | TPU | 50,8 | 66,67 | 8,72 | 7,93 | 453,12 |
| 159163 | SNI 39 | TPU | 50,8 | 66,67 | 14,3 | 12,7 | 453,12 |
| 159164 | SNI 39 | TPU | 50,8 | 69,85 | 17,47 | 15,87 | 453,12 |
| 80321 | SNI 39 | TPU | 52 | 62 | 11 | 10 | 453,12 |
| 159165 | SNI 39 | TPU | 53,97 | 63,5 | 10,31 | 9,52 | 453,12 |
| 68142 | SNI 39 | TPU | 55 | 62,5 | 10 | 9 | 453,12 |
| 170899 | SNI 39 | TPU | 55 | 63 | 12,5 | 11,5 | 453,12 |
| 170900 | SNI 39 | TPU | 55 | 65 | 9,5 | 9 | 453,12 |
| 68145 | SNI 39 | TPU | 55 | 65 | 11 | 10 | 453,12 |
| 80322 | SNI 39 | TPU | 55 | 65 | 13 | 12 | 453,12 |
| 48501 | SNI 39 | TPU | 55 | 70 | 11 | 10 | 489,62 |
| 80325 | SNI 39 | TPU | 55 | 70 | 13 | 12 | 489,62 |
| 80326 | SNI 39 | TPU | 55 | 75 | 13 | 12 | 489,62 |
| 80327 | SNI 39 | TPU | 56 | 66 | 11 | 10 | 453,12 |
| 125088 | SNI 39 | TPU | 56 | 71 | 12,5 | 11,5 | 476,74 |
| 80329 | SNI 39 | TPU | 56 | 76 | 13 | 12 | 500,36 |
| 170901 | SNI 39 | TPU | 57,1 | 66,7 | 10,5 | 10 | 453,12 |

| CODICE | TIPO | MAT. | d mm | D mm | L mm | H mm | LISTINO 5-2016 X 100 PCS € |
|---|---|---|---|---|---|---|---|
| 170902 | SNI 39 | TPU | 57,1 | 69,8 | 10,5 | 10 | 453,12 |
| 68147 | SNI 39 | TPU | 57,15 | 66,67 | 10,31 | 9,52 | 453,12 |
| 68148 | SNI 39 | TPU | 57,15 | 69,85 | 10,31 | 9,52 | 453,12 |
| 6412 | SNI 39 | TPU | 58 | 68 | 12,5 | 11,5 | 453,12 |
| 40622 | SNI 39 | TPU | 60 | 68 | 12,5 | 11,5 | 476,74 |
| 80598 | SNI 39 | TPU | 60 | 70 | 8 | 7,5 | 489,62 |
| 80324 | SNI 39 | TPU | 60 | 70 | 11 | 10 | 489,62 |
| 68152 | SNI 39 | TPU | 60 | 70 | 12,5 | 11,5 | 489,62 |
| 68153 | SNI 39 | TPU | 60 | 70 | 13 | 12 | 489,62 |
| 127312 | SNI 39 | TPU | 60 | 72 | 11 | 10 | 489,62 |
| 68154 | SNI 39 | TPU | 60 | 75 | 11 | 10 | 500,36 |
| 86721 | SNI 39 | TPU | 60 | 75 | 12,5 | 11,5 | 500,36 |
| 46917 | SNI 39 | TPU | 60 | 75 | 13 | 12 | 500,36 |
| 68155 | SNI 39 | TPU | 60 | 75 | 16,5 | 15,5 | 526,13 |
| 80331 | SNI 39 | TPU | 60 | 80 | 13 | 12 | 539,01 |
| 159166 | SNI 39 | TPU | 60,32 | 69,85 | 10,31 | 9,52 | 489,62 |
| 159169 | SNI 39 | TPU | 60,32 | 73,02 | 10,31 | 9,52 | 489,62 |
| 46919 | SNI 39 | TPU | 63 | 73 | 13 | 12 | 489,62 |
| 80330 | SNI 39 | TPU | 63 | 78 | 11 | 10 | 513,24 |
| 68173 | SNI 39 | TPU | 63 | 78 | 12,5 | 11,5 | 513,24 |
| 80334 | SNI 39 | TPU | 63 | 83 | 13 | 12 | 539,01 |
| 68164 | SNI 39 | TPU | 63 | 83 | 14,5 | 13,5 | 539,01 |
| 159171 | SNI 39 | TPU | 63,5 | 73,02 | 8,72 | 7,93 | 513,24 |
| 159174 | SNI 39 | TPU | 63,5 | 73,02 | 10,31 | 9,52 | 513,24 |
| 159175 | SNI 39 | TPU | 63,5 | 76,2 | 7,14 | 6,35 | 513,24 |
| 68165 | SNI 39 | TPU | 63,5 | 76,2 | 10,31 | 9,52 | 513,24 |
| 170903 | SNI 39 | TPU | 63,5 | 76,2 | 10,5 | 10 | 513,24 |
| 159177 | SNI 39 | TPU | 63,5 | 79,37 | 14,3 | 12,7 | 513,24 |
| 159178 | SNI 39 | TPU | 63,5 | 82,55 | 17,47 | 15,87 | 513,24 |
| 170904 | SNI 39 | TPU | 65 | 73 | 12,5 | 11,5 | 513,24 |
| 170905 | SNI 39 | TPU | 65 | 75 | 11 | 10 | 489,62 |
| 80600 | SNI 39 | TPU | 65 | 75 | 12,5 | 11,5 | 500,36 |
| 80921 | SNI 39 | TPU | 65 | 75 | 13 | 12 | 500,36 |
| 68167 | SNI 39 | TPU | 65 | 77,7 | 10,5 | 9,5 | 513,24 |
| 80333 | SNI 39 | TPU | 65 | 80 | 11 | 10 | 539,01 |
| 80335 | SNI 39 | TPU | 65 | 80 | 13 | 12 | 539,01 |
| 73974 | SNI 39 | TPU | 65 | 85 | 13 | 12 | 539,01 |
| 170906 | SNI 39 | TPU | 66 | 80 | 11 | 10,5 | 539,01 |
| 159179 | SNI 39 | TPU | 66,67 | 76,2 | 10,31 | 9,52 | 539,01 |
| 159180 | SNI 39 | TPU | 66,67 | 79,37 | 14,3 | 12,7 | 539,01 |
| 159182 | SNI 39 | TPU | 66,67 | 82,55 | 17,47 | 15,87 | 539,01 |
| 68169 | SNI 39 | TPU | 67 | 75 | 12,5 | 11,5 | 500,36 |
| 170907 | SNI 39 | TPU | 69,8 | 82,5 | 10,5 | 10 | 539,01 |
| 159183 | SNI 39 | TPU | 69,85 | 79,37 | 10,31 | 9,52 | 539,01 |
| 159184 | SNI 39 | TPU | 69,85 | 85,72 | 10,31 | 9,52 | 549,75 |
| 68171 | SNI 39 | TPU | 70 | 77,5 | 10 | 9 | 539,01 |
| 170908 | SNI 39 | TPU | 70 | 78 | 12,5 | 11,5 | 513,24 |
| 68172 | SNI 39 | TPU | 70 | 79 | 14 | 13 | 539,01 |
| 170909 | SNI 39 | TPU | 70 | 80 | 12,5 | 11,5 | 539,01 |

# GUARNIZIONE STELO - SNI 39

TPU

| CODICE | TIPO | MAT. | d mm | D mm | L mm | H mm | LISTINO 5-2016 X 100 PCS € |
|---|---|---|---|---|---|---|---|
| 22132 | SNI 39 | TPU | 70 | 80 | 13 | 12 | 539,01 |
| 37968 | SNI 39 | TPU | 70 | 85 | 11 | 10 | 539,01 |
| 68177 | SNI 39 | TPU | 70 | 85 | 12,5 | 11,5 | 539,01 |
| 118988 | SNI 39 | TPU | 70 | 85 | 13 | 12 | 539,01 |
| 68179 | SNI 39 | TPU | 70 | 90 | 13 | 12 | 549,75 |
| 80338 | SNI 39 | TPU | 70 | 90 | 16 | 15 | 549,75 |
| 170910 | SNI 39 | TPU | 73 | 82,4 | 7,8 | 7,3 | 526,13 |
| 159187 | SNI 39 | TPU | 73,02 | 82,55 | 10,31 | 9,52 | 549,42 |
| 68181 | SNI 39 | TPU | 75 | 83 | 12,5 | 11,5 | 526,13 |
| 170911 | SNI 39 | TPU | 75 | 85 | 11 | 10,5 | 526,13 |
| 68184 | SNI 39 | TPU | 75 | 85 | 12,5 | 11,5 | 526,13 |
| 46922 | SNI 39 | TPU | 75 | 85 | 13 | 12 | 526,13 |
| 80336 | SNI 39 | TPU | 75 | 90 | 11 | 10 | 549,75 |
| 80337 | SNI 39 | TPU | 75 | 90 | 13 | 12 | 549,75 |
| 159188 | SNI 39 | TPU | 76,2 | 85,72 | 10,31 | 9,52 | 562,63 |
| 68186 | SNI 39 | TPU | 76,2 | 88,9 | 10,31 | 9,52 | 562,63 |
| 170912 | SNI 39 | TPU | 76,2 | 88,9 | 10,5 | 10 | 562,64 |
| 159191 | SNI 39 | TPU | 76,2 | 95,25 | 17,47 | 15,87 | 562,63 |
| 68187 | SNI 39 | TPU | 77 | 86 | 15 | 14 | 562,63 |
| 61440 | SNI 39 | TPU | 78 | 86 | 12,5 | 11,5 | 539,01 |
| 68189 | SNI 39 | TPU | 78 | 86 | 14,5 | 13,5 | 539,01 |
| 170913 | SNI 39 | TPU | 78 | 88 | 13 | 12 | 562,64 |
| 170914 | SNI 39 | TPU | 78 | 90 | 13 | 12,5 | 562,64 |
| 170915 | SNI 39 | TPU | 79,4 | 88,9 | 10,5 | 10 | 562,64 |
| 170916 | SNI 39 | TPU | 80 | 88 | 12,5 | 11,5 | 562,64 |
| 22965 | SNI 39 | TPU | 80 | 90 | 13 | 12 | 562,64 |
| 59321 | SNI 39 | TPU | 80 | 95 | 11 | 10 | 562,63 |
| 80610 | SNI 39 | TPU | 80 | 95 | 12,5 | 11,5 | 562,64 |
| 80340 | SNI 39 | TPU | 80 | 95 | 13 | 12 | 562,64 |
| 80341 | SNI 39 | TPU | 80 | 100 | 13 | 12 | 648,54 |
| 80342 | SNI 39 | TPU | 80 | 100 | 16 | 15 | 648,54 |
| 170917 | SNI 39 | TPU | 82,5 | 97,5 | 13 | 12,5 | 648,54 |
| 159193 | SNI 39 | TPU | 82,55 | 92,07 | 10,31 | 9,52 | 648,54 |
| 159194 | SNI 39 | TPU | 82,55 | 92,07 | 15,72 | 14,28 | 648,54 |
| 89892 | SNI 39 | TPU | 82,55 | 95,25 | 10,31 | 9,52 | 648,54 |
| 159195 | SNI 39 | TPU | 82,55 | 98,42 | 14,3 | 12,7 | 648,54 |
| 68194 | SNI 39 | TPU | 85 | 92,5 | 10 | 9 | 562,64 |
| 37769 | SNI 39 | TPU | 85 | 93 | 12,5 | 11,5 | 562,64 |
| 191823 | SNI 39 | TPU | 85 | 95 | 12,5 | 11,5 | 618,80 |
| 125091 | SNI 39 | TPU | 85 | 100 | 12,5 | 11,5 | 657,74 |
| 89157 | SNI 39 | TPU | 85 | 100 | 13 | 12 | 657,74 |
| 80343 | SNI 39 | TPU | 85 | 105 | 13 | 12 | 657,74 |
| 159196 | SNI 39 | TPU | 88,9 | 98,42 | 10,31 | 9,52 | 670,01 |
| 159197 | SNI 39 | TPU | 88,9 | 101,6 | 8,72 | 7,93 | 670,01 |
| 68195 | SNI 39 | TPU | 88,9 | 101,6 | 10,31 | 9,52 | 670,01 |
| 170918 | SNI 39 | TPU | 88,9 | 101,6 | 10,5 | 10 | 670,01 |
| 159199 | SNI 39 | TPU | 88,9 | 107,95 | 17,47 | 15,87 | 670,01 |
| 170919 | SNI 39 | TPU | 90 | 98 | 12,5 | 11,5 | 670,01 |
| 170921 | SNI 39 | TPU | 90 | 100 | 8 | 7,5 | 670,01 |

| CODICE | TIPO | MAT. | d mm | D mm | L mm | H mm | LISTINO 5-2016 X 100 PCS € |
|---|---|---|---|---|---|---|---|
| 170920 | SNI 39 | TPU | 90 | 100 | 10 | 9 | 670,01 |
| 68196 | SNI 39 | TPU | 90 | 100 | 12,5 | 11,5 | 670,01 |
| 124684 | SNI 39 | TPU | 90 | 100 | 13 | 12 | 670,01 |
| 68197 | SNI 39 | TPU | 90 | 105 | 12,5 | 11,5 | 711,73 |
| 22361 | SNI 39 | TPU | 90 | 105 | 13 | 12 | 711,74 |
| 68198 | SNI 39 | TPU | 90 | 110 | 13 | 12 | 768,18 |
| 159200 | SNI 39 | TPU | 92,07 | 104,77 | 10,31 | 9,52 | 768,18 |
| 7483 | SNI 39 | TPU | 93 | 101 | 12,5 | 11,5 | 768,18 |
| 170923 | SNI 39 | TPU | 95 | 105 | 9,5 | 9 | 670,01 |
| 68201 | SNI 39 | TPU | 95 | 105 | 13 | 12 | 670,01 |
| 118863 | SNI 39 | TPU | 95 | 115 | 13 | 12 | 768,18 |
| 159201 | SNI 39 | TPU | 95,25 | 104,77 | 10,31 | 9,52 | 768,18 |
| 159202 | SNI 39 | TPU | 95,25 | 107,95 | 10,31 | 9,52 | 768,18 |
| 159203 | SNI 39 | TPU | 95,25 | 107,95 | 14,3 | 12,7 | 768,18 |
| 159204 | SNI 39 | TPU | 95,25 | 107,95 | 15,72 | 14,28 | 768,18 |
| 170924 | SNI 39 | TPU | 97 | 105 | 12,5 | 11,5 | 670,01 |
| 68203 | SNI 39 | TPU | 97 | 105 | 14,5 | 13,5 | 670,01 |
| 170925 | SNI 39 | TPU | 97 | 106 | 15 | 14 | 670,01 |
| 170926 | SNI 39 | TPU | 99 | 109 | 13 | 12,5 | 741,18 |
| 170927 | SNI 39 | TPU | 100 | 108 | 12,5 | 11,5 | 741,18 |
| 170929 | SNI 39 | TPU | 100 | 110 | 11 | 10,5 | 741,18 |
| 170928 | SNI 39 | TPU | 100 | 110 | 12,5 | 11,5 | 741,18 |
| 160456 | SNI 39 | TPU | 100 | 110 | 15 | 14 | 741,18 |
| 167044 | SNI 39 | TPU | 100 | 115 | 11 | 10 | 741,19 |
| 80349 | SNI 39 | TPU | 100 | 115 | 13 | 12 | 741,18 |
| 80350 | SNI 39 | TPU | 100 | 120 | 13 | 12 | 922,80 |
| 80612 | SNI 39 | TPU | 100 | 120 | 16 | 14,5 | 922,79 |
| 80351 | SNI 39 | TPU | 100 | 120 | 16 | 15 | 922,79 |
| 80346 | SNI 39 | TPU | 100 | 125 | 16 | 15 | 922,79 |
| 159206 | SNI 39 | TPU | 101,6 | 114,3 | 8,72 | 7,93 | 922,79 |
| 159207 | SNI 39 | TPU | 101,6 | 114,3 | 10,31 | 9,52 | 922,79 |
| 159211 | SNI 39 | TPU | 101,6 | 120,65 | 14,3 | 12,7 | 922,79 |
| 159212 | SNI 39 | TPU | 101,6 | 120,65 | 17,47 | 15,87 | 922,79 |
| 170931 | SNI 39 | TPU | 105 | 113 | 12,5 | 11,5 | 741,18 |
| 170930 | SNI 39 | TPU | 105 | 113 | 14,5 | 13,5 | 741,18 |
| 68211 | SNI 39 | TPU | 105 | 115 | 12,5 | 11,5 | 741,18 |
| 59451 | SNI 39 | TPU | 105 | 120 | 10,9 | 9,9 | 768,18 |
| 170932 | SNI 39 | TPU | 110 | 118 | 12,5 | 11,5 | 851,62 |
| 187736 | SNI 39 | TPU | 110 | 120 | 13 | 12 | 922,79 |
| 22363 | SNI 39 | TPU | 110 | 125 | 16 | 15 | 1.006,24 |
| 80356 | SNI 39 | TPU | 110 | 130 | 13 | 12 | 1.047,96 |
| 80358 | SNI 39 | TPU | 110 | 130 | 16 | 14,5 | 1.047,97 |
| 80357 | SNI 39 | TPU | 110 | 130 | 16 | 15 | 1.047,97 |
| 80354 | SNI 39 | TPU | 110 | 135 | 16 | 15 | 1.047,97 |
| 170933 | SNI 39 | TPU | 112 | 122 | 11 | 10,5 | 881,08 |
| 170934 | SNI 39 | TPU | 113 | 123 | 9,5 | 9 | 881,08 |
| 159214 | SNI 39 | TPU | 114,3 | 127 | 10,31 | 9,52 | 1.047,97 |
| 68228 | SNI 39 | TPU | 115 | 123 | 12,5 | 11,5 | 881,08 |
| 68229 | SNI 39 | TPU | 115 | 125 | 13 | 12 | 881,08 |

# GUARNIZIONE STELO - SNI 39

TPU

| CODICE | TIPO | MAT. | d mm | D mm | L mm | H mm | LISTINO 5-2016 X 100 PCS € |
|---|---|---|---|---|---|---|---|
| 170935 | SNI 39 | TPU | 115 | 125 | 15 | 14 | 881,08 |
| 170936 | SNI 39 | TPU | 115 | 130 | 11 | 10,5 | 893,35 |
| 68230 | SNI 39 | TPU | 117 | 126 | 15 | 14 | 893,35 |
| 68232 | SNI 39 | TPU | 118 | 126 | 14,5 | 13,5 | 893,35 |
| 68233 | SNI 39 | TPU | 120 | 128 | 12,5 | 11,5 | 922,80 |
| 68234 | SNI 39 | TPU | 120 | 130 | 12,5 | 11,5 | 893,35 |
| 170937 | SNI 39 | TPU | 120 | 130 | 13 | 12 | 893,35 |
| 77703 | SNI 39 | TPU | 120 | 135 | 16 | 15 | 1.006,24 |
| 80359 | SNI 39 | TPU | 120 | 140 | 13 | 12 | 1.116,68 |
| 22134 | SNI 39 | TPU | 120 | 140 | 16 | 15 | 1.116,69 |
| 159220 | SNI 39 | TPU | 120,65 | 130,17 | 10,31 | 9,52 | 1.047,97 |
| 159221 | SNI 39 | TPU | 120,65 | 130,17 | 17,47 | 15,87 | 1.047,97 |
| 68236 | SNI 39 | TPU | 121 | 135 | 10 | 9 | 949,79 |
| 76472 | SNI 39 | TPU | 125 | 133 | 12,5 | 11,5 | 922,80 |
| 170938 | SNI 39 | TPU | 125 | 135 | 11 | 10 | 922,80 |
| 80361 | SNI 39 | TPU | 125 | 145 | 13 | 12 | 1.202,58 |
| 80365 | SNI 39 | TPU | 125 | 145 | 16 | 15 | 1.202,58 |
| 80367 | SNI 39 | TPU | 125 | 150 | 16 | 15 | 1.202,58 |
| 80369 | SNI 39 | TPU | 125 | 155 | 19 | 18 | 1.202,58 |
| 159222 | SNI 39 | TPU | 127 | 139,7 | 10,31 | 9,52 | 1.202,58 |
| 159225 | SNI 39 | TPU | 127 | 146,05 | 17,47 | 15,87 | 1.202,58 |
| 170939 | SNI 39 | TPU | 128 | 136 | 12,5 | 11,5 | 991,52 |
| 170940 | SNI 39 | TPU | 130 | 138 | 12,5 | 11,5 | 991,52 |
| 80362 | SNI 39 | TPU | 130 | 150 | 13 | 12 | 1.202,58 |
| 80363 | SNI 39 | TPU | 130 | 150 | 16 | 15 | 1.202,58 |
| 159227 | SNI 39 | TPU | 130,17 | 152,4 | 14,3 | 12,7 | 1.229,58 |
| 76473 | SNI 39 | TPU | 131 | 150 | 14 | 13 | 1.229,58 |
| 170941 | SNI 39 | TPU | 135 | 143 | 12,5 | 11,5 | 1.006,24 |
| 68301 | SNI 39 | TPU | 135 | 150 | 12,5 | 11,5 | 1.160,86 |
| 170942 | SNI 39 | TPU | 135 | 150 | 16 | 15 | 1.160,86 |
| 68303 | SNI 39 | TPU | 137 | 146 | 15 | 14 | 1.074,96 |
| 159231 | SNI 39 | TPU | 139,7 | 152,4 | 10,31 | 9,52 | 1.229,58 |
| 159230 | SNI 39 | TPU | 139,7 | 152,4 | 15,72 | 14,28 | 1.229,58 |
| 170943 | SNI 39 | TPU | 140 | 148 | 12,5 | 11,5 | 1.131,41 |
| 68305 | SNI 39 | TPU | 140 | 150 | 12,5 | 11,5 | 1.160,86 |
| 80314 | SNI 39 | TPU | 140 | 160 | 13 | 12 | 1.229,58 |
| 80364 | SNI 39 | TPU | 140 | 160 | 16 | 15 | 1.229,58 |
| 80353 | SNI 39 | TPU | 140 | 165 | 16 | 15 | 1.536,36 |
| 80332 | SNI 39 | TPU | 140 | 170 | 19 | 18 | 1.536,36 |
| 170944 | SNI 39 | TPU | 141 | 151 | 13 | 12,5 | 1.229,58 |
| 159234 | SNI 39 | TPU | 142,87 | 155,57 | 10,31 | 9,52 | 1.229,58 |
| 68308 | SNI 39 | TPU | 143 | 151 | 12,5 | 11,5 | 1.160,86 |
| 170945 | SNI 39 | TPU | 145 | 155 | 13 | 12,5 | 1.187,86 |
| 170946 | SNI 39 | TPU | 145 | 160 | 13 | 12 | 1.229,58 |
| 80345 | SNI 39 | TPU | 150 | 170 | 16 | 15 | 1.536,36 |
| 80348 | SNI 39 | TPU | 150 | 180 | 19 | 18 | 2.012,49 |
| 69589 | SNI 39 | TPU | 160 | 168 | 12,5 | 11,5 | 1.595,79 |
| 22137 | SNI 39 | TPU | 160 | 180 | 16 | 15 | 1.415,01 |
| 191821 | SNI 39 | TPU | 165 | 175 | 12,5 | 11,5 | 1.693,12 |

TPU

# GUARNIZIONE STELO - SNI 39

| CODICE | TIPO | MAT. | d mm | D mm | L mm | H mm | LISTINO 5-2016 X 100 PCS € |
|---|---|---|---|---|---|---|---|
| 80590 | SNI 39 | TPU | 170 | 190 | 16 | 15 | 1.472,55 |
| 80592 | SNI 39 | TPU | 180 | 205 | 20 | 19 | 3.568,76 |
| 80595 | SNI 39 | TPU | 200 | 230 | 19 | 18 | 4.251,69 |
| 80373 | SNI 39 | TPU | 210 | 240 | 19 | 18 | 5.037,50 |

# Raschiatore

FKM 90/METAL

AM 43

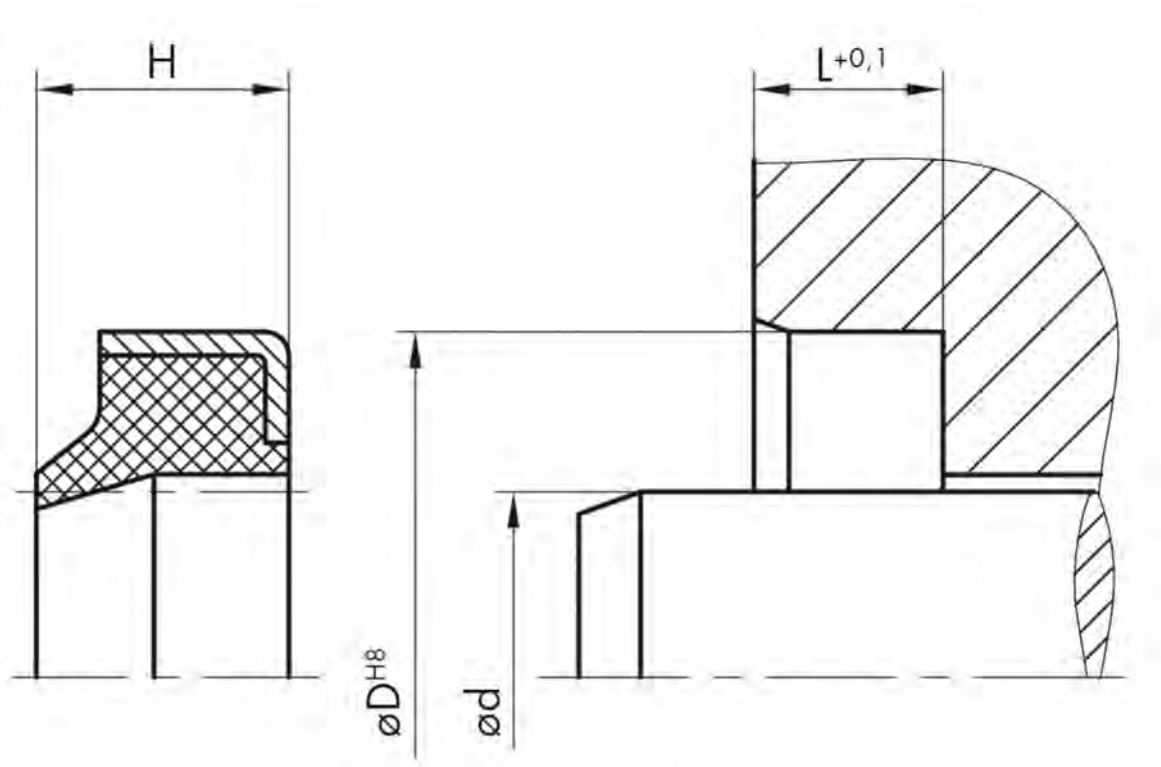
H
L+0,1
øD H8
ød

| CODICE | TIPO | MAT | d mm | D mm | L mm | H mm | LISTINO 5-2016 X 1 PCS € |
|---|---|---|---|---|---|---|---|
| 48918 | AM 43 | FKM | 12 | 22 | 5 | 8 | A RICHIESTA |
| 82978 | AM 43 | FKM | 16 | 22 | 3 | 4 | A RICHIESTA |
| 134133 | AM 43 | FKM | 20 | 30 | 4 | 6 | A RICHIESTA |
| 46339 | AM 43 | FKM | 25 | 35 | 5 | 7 | A RICHIESTA |
| 89136 | AM 43 | FKM | 25 | 35 | 7 | 10 | A RICHIESTA |
| 83518 | AM 43 | FKM | 30 | 40 | 5 | 8 | A RICHIESTA |
| 89137 | AM 43 | FKM | 30 | 40 | 7 | 10 | A RICHIESTA |
| 134113 | AM 43 | FKM | 36 | 45 | 7 | 10 | A RICHIESTA |
| 134755 | AM 43 | FKM | 36 | 46 | 5 | 7 | A RICHIESTA |
| 37266 | AM 43 | FKM | 40 | 50 | 7 | 10 | A RICHIESTA |
| 89138 | AM 43 | FKM | 45 | 55 | 7 | 10 | A RICHIESTA |
| 90784 | AM 43 | FKM | 50 | 60 | 7 | 10 | A RICHIESTA |
| 117648 | AM 43 | FKM | 56 | 66 | 7 | 10 | A RICHIESTA |
| 77672 | AM 43 | FKM | 60 | 70 | 7 | 10 | A RICHIESTA |
| 117649 | AM 43 | FKM | 65 | 75 | 7 | 10 | A RICHIESTA |
| 44078 | AM 43 | FKM | 70 | 80 | 7 | 10 | A RICHIESTA |
| 84197 | AM 43 | FKM | 80 | 90 | 7 | 10 | A RICHIESTA |
| 48921 | AM 43 | FKM | 90 | 100 | 7 | 10 | A RICHIESTA |
| 44412 | AM 43 | FKM | 100 | 110 | 7 | 10 | A RICHIESTA |
| 59657 | AM 43 | FKM | 110 | 120 | 7 | 10 | A RICHIESTA |
| 121790 | AM 43 | FKM | 130 | 145 | 9 | 12 | A RICHIESTA |
| 118379 | AM 43 | FKM | 160 | 175 | 9 | 12 | A RICHIESTA |

# Raschiatore

NBR 90

AD 51

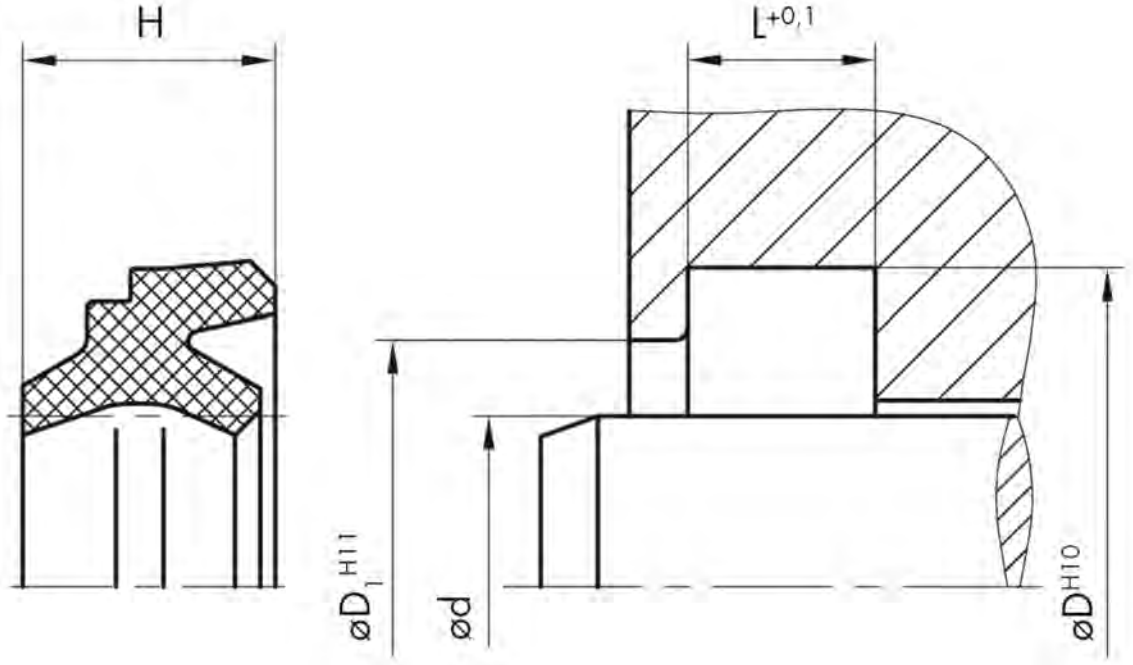
H
L+0,1
øD1 H11
ød
øD H10

| CODICE | TIPO | MAT | d mm | D mm | L mm | H mm | LISTINO 5-2016 X 100 € |
|---|---|---|---|---|---|---|---|
| 190005 | AD 51 | NBR | 8 | 14 | 4 | 5 | 136,41 |
| 188774 | AD 51 | NBR | 10 | 18 | 6 | 8 | 136,41 |
| 192465 | AD 51 | NBR | 12 | 20 | 6 | 8 | 136,41 |
| 192466 | AD 51 | NBR | 14 | 22 | 6 | 8 | 136,41 |
| 188897 | AD 51 | NBR | 15 | 23 | 6 | 8 | 157,62 |
| 188356 | AD 51 | NBR | 16 | 24 | 6 | 7 | 157,62 |
| 190272 | AD 51 | NBR | 16 | 24 | 6 | 8 | 157,62 |
| 188164 | AD 51 | NBR | 18 | 26 | 6 | 8 | 157,62 |
| 188205 | AD 51 | NBR | 20 | 28 | 6 | 8 | 179,75 |
| 188520 | AD 51 | NBR | 22 | 30 | 6 | 8 | 179,75 |
| 84984 | AD 51 | NBR | 24 | 32 | 6 | 8 | 179,75 |
| 188204 | AD 51 | NBR | 25 | 33 | 6 | 8 | 179,75 |
| 189773 | AD 51 | NBR | 28 | 36 | 6 | 8 | 179,75 |
| 188187 | AD 51 | NBR | 30 | 38 | 6 | 8 | 200,04 |
| 188203 | AD 51 | NBR | 32 | 40 | 6 | 8 | 200,04 |
| 188202 | AD 51 | NBR | 35 | 43 | 6 | 8 | 200,04 |
| 188773 | AD 51 | NBR | 36 | 44 | 6 | 8 | 200,04 |
| 188564 | AD 51 | NBR | 38 | 46 | 6 | 8 | 200,04 |
| 192473 | AD 51 | NBR | 40 | 48 | 4 | 5 | 200,04 |
| 188022 | AD 51 | NBR | 40 | 48 | 6 | 8 | 200,04 |
| 188522 | AD 51 | NBR | 42 | 50 | 6 | 8 | 210,27 |
| 188188 | AD 51 | NBR | 45 | 53 | 6 | 8 | 210,27 |
| 188264 | AD 51 | NBR | 46 | 54 | 6 | 8 | 252,53 |
| 188775 | AD 51 | NBR | 48 | 56 | 6 | 8 | 252,53 |
| 189217 | AD 51 | NBR | 50 | 58 | 6 | 8 | 252,53 |
| 188316 | AD 51 | NBR | 52 | 60 | 6 | 8 | 263,68 |
| 190271 | AD 51 | NBR | 55 | 63 | 6 | 8 | 263,68 |
| 192462 | AD 51 | NBR | 56 | 64 | 6 | 8 | 263,68 |
| 188665 | AD 51 | NBR | 60 | 68 | 6 | 8 | 294,18 |
| 188317 | AD 51 | NBR | 63 | 71 | 6 | 8 | 305,17 |
| 188098 | AD 51 | NBR | 65 | 73 | 6 | 8 | 305,17 |
| 190285 | AD 51 | NBR | 68 | 76 | 6 | 8 | 305,17 |
| 188772 | AD 51 | NBR | 70 | 78 | 6 | 8 | 305,17 |
| 188254 | AD 51 | NBR | 75 | 83 | 6 | 8 | 405,93 |
| 192464 | AD 51 | NBR | 80 | 88 | 6 | 8 | 405,93 |
| 189216 | AD 51 | NBR | 85 | 93 | 6 | 8 | 405,93 |
| 193208 | AD 51 | NBR | 90 | 98 | 6 | 8 | 405,93 |
| 192467 | AD 51 | NBR | 95 | 103 | 6 | 8 | 439,97 |
| 192468 | AD 51 | NBR | 100 | 108 | 6 | 8 | 474,12 |
| 189423 | AD 51 | NBR | 105 | 117 | 8,2 | 11 | 812,32 |
| 188175 | AD 51 | NBR | 110 | 122 | 8,2 | 11 | 862,24 |
| 188323 | AD 51 | NBR | 115 | 127 | 8,2 | 11 | 903,06 |
| 192469 | AD 51 | NBR | 120 | 132 | 8,2 | 11 | 986,01 |
| 192463 | AD 51 | NBR | 125 | 137 | 8,2 | 11 | 1.247,01 |
| 189340 | AD 51 | NBR | 130 | 142 | 8,2 | 11 | 1.297,88 |
| 192470 | AD 51 | NBR | 135 | 147 | 8,2 | 11 | 1.297,88 |

# RASCHIATORE - AD 51

NBR 90

| CODICE | TIPO | MAT | d mm | D mm | L mm | H mm | LISTINO 5-2016 X 100 € |
|---|---|---|---|---|---|---|---|
| 189218 | AD 51 | NBR | 140 | 152 | 8,2 | 11 | 1.356,88 |
| 188318 | AD 51 | NBR | 150 | 162 | 8,2 | 11 | 1.356,88 |
| 189339 | AD 51 | NBR | 160 | 172 | 8,2 | 11 | 1.765,31 |
| 188319 | AD 51 | NBR | 165 | 177 | 8,2 | 11 | 1.765,31 |
| 188238 | AD 51 | NBR | 170 | 182 | 8,2 | 11 | 1.901,45 |
| 188521 | AD 51 | NBR | 180 | 192 | 8,2 | 11 | 1.901,45 |
| 188320 | AD 51 | NBR | 190 | 202 | 8,2 | 11 | 2.022,92 |
| 188776 | AD 51 | NBR | 195 | 207 | 8,2 | 11 | 2.221,79 |
| 188132 | AD 51 | NBR | 200 | 212 | 8,2 | 11 | 2.443,97 |
| 189324 | AD 51 | NBR | 205 | 220 | 9,5 | 13 | 2.688,38 |
| 192471 | AD 51 | NBR | 210 | 225 | 9,5 | 13 | 2.957,20 |
| 189800 | AD 51 | NBR | 220 | 235 | 9,5 | 13 | 3.252,92 |
| 189774 | AD 51 | NBR | 225 | 240 | 9,5 | 13 | 3.578,21 |
| 192472 | AD 51 | NBR | 230 | 245 | 9,5 | 13 | 3.936,03 |
| 188324 | AD 51 | NBR | 240 | 255 | 9,5 | 13 | 3.936,03 |
| 188898 | AD 51 | NBR | 250 | 265 | 9,5 | 13 | 4.329,64 |
| 193210 | AD 51 | NBR | 260 | 275 | 9,5 | 13 | 4.762,61 |
| 188325 | AD 51 | NBR | 280 | 295 | 9,5 | 13 | 5.762,75 |
| 188860 | AD 51 | NBR | 300 | 315 | 9,5 | 13 | 6.972,93 |
| 188321 | AD 51 | NBR | 320 | 335 | 9,5 | 13 | 7.670,23 |
| 188322 | AD 51 | NBR | 350 | 365 | 9,5 | 13 | 8.437,24 |
| 194055 | AD 51 | NBR | 360 | 375 | 9,5 | 13 | 9.280,96 |
| 188680 | AD 51 | NBR | 370 | 385 | 9,5 | 13 | 10.209,07 |
| 189776 | AD 51 | NBR | 400 | 415 | 9,5 | 13 | 11.793,04 |

# Raschiatore

NBR 90

AE 40

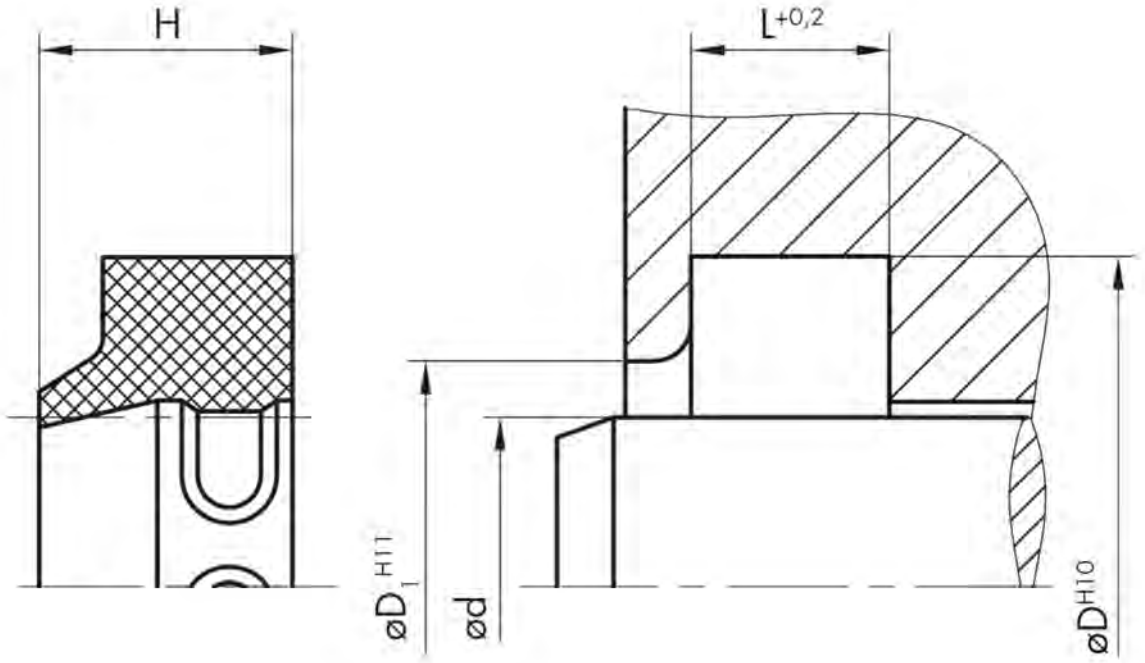
H
L+0,2
øD1 H11
ød
øDH10

| CODICE | TIPO | MAT | d mm | D mm | L mm | H mm | LISTINO 5-2016 X 100 € |
|---|---|---|---|---|---|---|---|
| 192728 | AE 40 | NBR | 12 | 18,6 | 3,8 | 5,5 | 137,64 |
| 189390 | AE 40 | NBR | 15 | 21,6 | 3,8 | 5,5 | 137,64 |
| 188410 | AE 40 | NBR | 16 | 22,6 | 3,7 | 5,5 | 137,64 |
| 192478 | AE 40 | NBR | 18 | 24,6 | 3,8 | 5,5 | 137,64 |
| 188914 | AE 40 | NBR | 18 | 30,6 | 5,3 | 7 | 137,64 |
| 189391 | AE 40 | NBR | 19 | 28,4 | 5,3 | 7 | 137,64 |
| 188417 | AE 40 | NBR | 20 | 28,6 | 5,3 | 7 | 137,64 |
| 188192 | AE 40 | NBR | 22 | 30,6 | 5,3 | 7 | 137,64 |
| 190007 | AE 40 | NBR | 24 | 32,6 | 5,3 | 7 | 142,19 |
| 188196 | AE 40 | NBR | 25 | 33,6 | 5,3 | 7 | 142,19 |
| 192480 | AE 40 | NBR | 27 | 35,6 | 5,3 | 7 | 142,19 |
| 192483 | AE 40 | NBR | 28 | 36,6 | 5,3 | 7 | 142,19 |
| 188903 | AE 40 | NBR | 30 | 38,6 | 5,3 | 7 | 184,32 |
| 188193 | AE 40 | NBR | 32 | 40,6 | 5,3 | 7 | 184,32 |
| 190277 | AE 40 | NBR | 33 | 42,6 | 5,3 | 7 | 184,32 |
| 189377 | AE 40 | NBR | 35 | 43,6 | 5,3 | 7 | 184,32 |
| 192482 | AE 40 | NBR | 35 | 47,2 | 4,3 | 7 | 184,32 |
| 188637 | AE 40 | NBR | 35 | 47,6 | 5,3 | 7 | 184,32 |
| 188306 | AE 40 | NBR | 36 | 44,6 | 5,3 | 7 | 184,32 |
| 188864 | AE 40 | NBR | 38 | 46,6 | 5,3 | 7 | 184,32 |
| 188197 | AE 40 | NBR | 40 | 48,6 | 5,3 | 7 | 184,32 |
| 189769 | AE 40 | NBR | 40 | 52,2 | 6,3 | 8 | 184,32 |
| 188408 | AE 40 | NBR | 42 | 50,6 | 5,3 | 7 | 184,32 |
| 188194 | AE 40 | NBR | 45 | 53,6 | 5,3 | 7 | 184,32 |
| 192048 | AE 40 | NBR | 45 | 55,6 | 5,3 | 7 | 197,48 |
| 192476 | AE 40 | NBR | 46 | 54,6 | 5,3 | 7 | 197,48 |
| 192481 | AE 40 | NBR | 48 | 56,6 | 5,3 | 7 | 197,48 |
| 188195 | AE 40 | NBR | 50 | 58,6 | 5,3 | 7 | 213,29 |
| 190502 | AE 40 | NBR | 50 | 60,6 | 5,3 | 7 | 213,29 |
| 196808 | AE 40 | NBR | 53 | 61,6 | 5,3 | 7 | 213,29 |
| 188178 | AE 40 | NBR | 55 | 63,6 | 5,3 | 7 | 239,62 |
| 188089 | AE 40 | NBR | 55 | 65,6 | 5,3 | 7 | 239,62 |
| 188304 | AE 40 | NBR | 56 | 66,6 | 5,3 | 7 | 239,62 |
| 188243 | AE 40 | NBR | 58 | 68,6 | 5,3 | 7 | 239,62 |
| 188663 | AE 40 | NBR | 60 | 68,6 | 5,3 | 7 | 239,62 |
| 188765 | AE 40 | NBR | 60 | 70,6 | 5,3 | 7 | 239,62 |
| 188146 | AE 40 | NBR | 63 | 71,6 | 5,3 | 7 | 268,58 |
| 188180 | AE 40 | NBR | 63 | 73,6 | 5,3 | 7 | 268,58 |
| 118172 | AE 40 | NBR | 63 | 75,2 | 6,3 | 9 | 268,58 |
| 173607 | AE 40 | NBR | 63 | 75,2 | 6,3 | 9 | 268,58 |
| 192475 | AE 40 | NBR | 65 | 73,6 | 5,3 | 7 | 268,58 |
| 188419 | AE 40 | NBR | 65 | 75,6 | 5,3 | 7 | 268,58 |
| 188766 | AE 40 | NBR | 70 | 78,6 | 5,3 | 7 | 268,58 |
| 188305 | AE 40 | NBR | 70 | 80,6 | 5,3 | 7 | 268,58 |
| 189889 | AE 40 | NBR | 70 | 82,2 | 7,2 | 12 | 268,58 |
| 188090 | AE 40 | NBR | 75 | 83,2 | 5,3 | 7 | 281,76 |

# RASCHIATORE - AE 40

NBR 90

| CODICE | TIPO | MAT | d mm | D mm | L mm | H mm | LISTINO 5-2016 X 100 € |
|---|---|---|---|---|---|---|---|
| 188915 | AE 40 | NBR | 75 | 85,6 | 5,3 | 7 | 281,76 |
| 194052 | AE 40 | NBR | 75 | 87,2 | 7,2 | 12 | 281,76 |
| 188407 | AE 40 | NBR | 80 | 88,6 | 5,3 | 7 | 297,55 |
| 188902 | AE 40 | NBR | 80 | 92,2 | 7,2 | 12 | 297,55 |
| 173609 | AE 40 | NBR | 84 | 92,3 | 5,3 | 7 | 310,72 |
| 188422 | AE 40 | NBR | 85 | 93,6 | 5,3 | 7 | 310,72 |
| 188420 | AE 40 | NBR | 85 | 97,2 | 7,2 | 12 | 310,72 |
| 173605 | AE 40 | NBR | 88 | 100,2 | 7,2 | 12 | 310,72 |
| 189763 | AE 40 | NBR | 90 | 102,2 | 7,2 | 12 | 339,69 |
| 192474 | AE 40 | NBR | 95 | 103,6 | 5,3 | 7 | 339,69 |
| 188235 | AE 40 | NBR | 95 | 107,2 | 7,2 | 12 | 352,86 |
| 189358 | AE 40 | NBR | 100 | 108,6 | 5,3 | 7 | 352,86 |
| 188421 | AE 40 | NBR | 100 | 112,2 | 7,2 | 12 | 368,65 |
| 173597 | AE 40 | NBR | 103 | 115,2 | 7,2 | 12 | 368,65 |
| 188019 | AE 40 | NBR | 105 | 113,6 | 5,3 | 7 | 410,79 |
| 188307 | AE 40 | NBR | 105 | 117,2 | 7,2 | 12 | 410,79 |
| 188636 | AE 40 | NBR | 110 | 118,6 | 5,3 | 7 | 410,79 |
| 189209 | AE 40 | NBR | 110 | 122,2 | 7,2 | 12 | 410,79 |
| 188020 | AE 40 | NBR | 115 | 123,2 | 5,3 | 7 | 423,95 |
| 5383 | AE 40 | NBR | 115 | 125,6 | 5,3 | 7 | 423,95 |
| 188145 | AE 40 | NBR | 115 | 127,2 | 7,2 | 12 | 423,95 |
| 197380 | AE 40 | NBR | 120 | 128,6 | 5,3 | 7 | 452,92 |
| 192477 | AE 40 | NBR | 120 | 132,2 | 7,2 | 12 | 452,92 |
| 189208 | AE 40 | NBR | 125 | 133,6 | 5,3 | 7 | 452,92 |
| 192824 | AE 40 | NBR | 125 | 140 | 10,2 | 16 | 550,34 |
| 189210 | AE 40 | NBR | 130 | 142,6 | 7,2 | 12 | 566,14 |
| 189207 | AE 40 | NBR | 135 | 147 | 7,2 | 12 | 566,14 |
| 173598 | AE 40 | NBR | 135 | 149,2 | 7,2 | 12 | 566,14 |
| 189887 | AE 40 | NBR | 140 | 152,2 | 7,1 | 12 | 595,11 |
| 188883 | AE 40 | NBR | 140 | 155,6 | 10,2 | 16 | 595,11 |
| 188882 | AE 40 | NBR | 150 | 165,6 | 10,2 | 16 | 637,24 |
| 192823 | AE 40 | NBR | 155 | 167,2 | 7,2 | 12 | 637,24 |
| 188668 | AE 40 | NBR | 160 | 175 | 10,2 | 16 | 745,14 |
| 188764 | AE 40 | NBR | 170 | 182,2 | 7,2 | 12 | 821,56 |
| 192123 | AE 40 | NBR | 170 | 185 | 10,2 | 16 | 1.061,19 |
| 188584 | AE 40 | NBR | 180 | 200 | 10,2 | 18 | 1.491,57 |
| 189389 | AE 40 | NBR | 200 | 220 | 10,2 | 18 | 1.662,42 |
| 192486 | AE 40 | NBR | 210 | 225 | 10,2 | 16 | 1.731,72 |
| 188747 | AE 40 | NBR | 220 | 240 | 10,2 | 18 | 2.063,36 |
| 173606 | AE 40 | NBR | 240 | 248 | 5,3 | 7 | 2.166,84 |
| 189359 | AE 40 | NBR | 240 | 260 | 10,2 | 18 | 2.383,31 |
| 193202 | AE 40 | NBR | 250 | 270 | 10,2 | 18 | 2.502,49 |
| 115573 | AE 40 | NBR | 260 | 280 | 10,2 | 18 | 2.702,61 |
| 192485 | AE 40 | NBR | 280 | 300 | 10,2 | 18 | 3.242,62 |
| 188748 | AE 40 | NBR | 300 | 320 | 10,2 | 18 | 3.889,60 |

# Raschiatore

NBR 90

AE 41

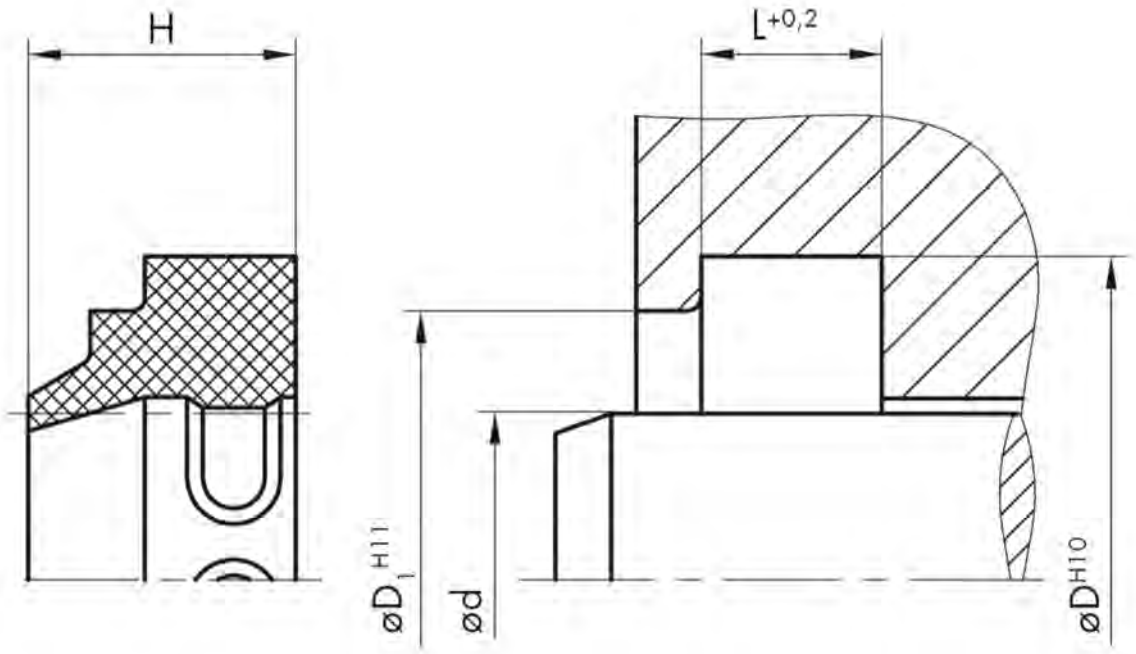
H
L+0,2
øD1 H11
ød
øDH10

| CODICE | TIPO | MAT | d mm | D mm | L mm | H mm | LISTINO 5-2016 X 100 € |
|---|---|---|---|---|---|---|---|
| 188634 | AE 41 | NBR | 4 | 12 | 4 | 7 | 124,37 |
| 188635 | AE 41 | NBR | 8 | 16 | 4 | 7 | 124,37 |
| 194051 | AE 41 | NBR | 10 | 18 | 4 | 7 | 124,37 |
| 189319 | AE 41 | NBR | 12 | 20 | 4 | 7 | 124,37 |
| 188736 | AE 41 | NBR | 14 | 22 | 4 | 7 | 124,37 |
| 195342 | AE 41 | NBR | 15 | 23 | 4 | 7 | 124,37 |
| 188275 | AE 41 | NBR | 16 | 24 | 4 | 7 | 124,37 |
| 64570 | AE 41 | NBR | 17 | 25 | 4 | 7 | 124,37 |
| 188853 | AE 41 | NBR | 18 | 26 | 4 | 7 | 124,37 |
| 188200 | AE 41 | NBR | 20 | 28 | 4 | 7 | 124,37 |
| 192047 | AE 41 | NBR | 22 | 30 | 4 | 7 | 124,37 |
| 188632 | AE 41 | NBR | 24 | 32 | 4 | 7 | 124,37 |
| 188895 | AE 41 | NBR | 25 | 33 | 4 | 7 | 124,37 |
| 158749 | AE 41 | NBR | 25 | 34 | 5 | 8 | 145,09 |
| 189854 | AE 41 | NBR | 26 | 34 | 4 | 7 | 145,09 |
| 188854 | AE 41 | NBR | 28 | 36 | 4 | 7 | 145,09 |
| 188201 | AE 41 | NBR | 30 | 38 | 4 | 7 | 145,09 |
| 188678 | AE 41 | NBR | 32 | 40 | 4 | 7 | 170,99 |
| 189752 | AE 41 | NBR | 33 | 41 | 4 | 7 | 170,99 |
| 189214 | AE 41 | NBR | 34 | 42 | 4 | 7 | 170,99 |
| 188896 | AE 41 | NBR | 35 | 43 | 4 | 7 | 170,99 |
| 188435 | AE 41 | NBR | 36 | 44 | 4 | 7 | 170,99 |
| 188427 | AE 41 | NBR | 38 | 46 | 4 | 7 | 170,99 |
| 188557 | AE 41 | NBR | 40 | 48 | 4 | 7 | 171,19 |
| 188923 | AE 41 | NBR | 40 | 50 | 5 | 8,5 | 171,19 |
| 188437 | AE 41 | NBR | 42 | 50 | 4 | 7 | 171,19 |
| 188912 | AE 41 | NBR | 44 | 52 | 4 | 7 | 191,73 |
| 188092 | AE 41 | NBR | 45 | 53 | 4 | 7 | 191,73 |
| 158742 | AE 41 | NBR | 47 | 58 | 5 | 8 | 191,73 |
| 188631 | AE 41 | NBR | 48 | 56 | 4 | 7 | 191,73 |
| 188679 | AE 41 | NBR | 50 | 58 | 4 | 7 | 191,73 |
| 196663 | AE 41 | NBR | 50 | 62 | 5,5 | 10 | 191,73 |
| 189304 | AE 41 | NBR | 54 | 62 | 4 | 7 | 191,73 |
| 188436 | AE 41 | NBR | 55 | 63 | 4 | 7 | 191,73 |
| 189211 | AE 41 | NBR | 56 | 64 | 4 | 7 | 191,73 |
| 188276 | AE 41 | NBR | 60 | 68 | 4 | 7 | 191,73 |
| 34 | AE 41 | NBR | 62 | 70 | 4 | 7 | 191,73 |
| 188059 | AE 41 | NBR | 63 | 71 | 4 | 7 | 238,35 |
| 188432 | AE 41 | NBR | 65 | 73 | 4 | 7 | 264,15 |
| 189318 | AE 41 | NBR | 68 | 76 | 4 | 7 | 285,02 |
| 188021 | AE 41 | NBR | 70 | 78 | 4 | 7 | 315,49 |
| 189213 | AE 41 | NBR | 75 | 83 | 4 | 7 | 326,74 |
| 194644 | AE 41 | NBR | 78 | 86 | 4 | 7 | 348,34 |
| 188220 | AE 41 | NBR | 80 | 88 | 4 | 7 | 361,10 |
| 188147 | AE 41 | NBR | 85 | 93 | 4 | 7 | 378,93 |
| 173610 | AE 41 | NBR | 88 | 96 | 4 | 7 | 398,64 |

# RASCHIATORE - AE 41

NBR 90

| CODICE | TIPO | MAT | d mm | D mm | L mm | H mm | LISTINO 5-2016 X 100 € |
|---|---|---|---|---|---|---|---|
| 189212 | AE 41 | NBR | 90 | 98 | 4 | 7 | 398,65 |
| 189320 | AE 41 | NBR | 95 | 103 | 4 | 7 | 406,00 |
| 188434 | AE 41 | NBR | 100 | 108 | 4 | 7 | 420,24 |
| 194643 | AE 41 | NBR | 110 | 118 | 4 | 7 | 436,45 |
| 188855 | AE 41 | NBR | 110 | 122 | 5,5 | 10 | 507,82 |
| 188628 | AE 41 | NBR | 115 | 127 | 5,5 | 10 | 530,22 |
| 188161 | AE 41 | NBR | 120 | 132 | 5,5 | 10 | 553,28 |
| 188913 | AE 41 | NBR | 125 | 137 | 5,5 | 10 | 570,00 |
| 173611 | AE 41 | NBR | 128 | 140 | 5,5 | 10 | 589,04 |
| 188633 | AE 41 | NBR | 130 | 142 | 5,5 | 10 | 589,05 |
| 188392 | AE 41 | NBR | 135 | 147 | 5,5 | 10 | 614,29 |
| 189306 | AE 41 | NBR | 140 | 152 | 5,5 | 10 | 649,51 |
| 188433 | AE 41 | NBR | 150 | 162 | 5,5 | 10 | 683,98 |
| 173612 | AE 41 | NBR | 152 | 164 | 5,5 | 10 | 683,98 |
| 188629 | AE 41 | NBR | 155 | 167 | 5,5 | 10 | 807,85 |
| 189307 | AE 41 | NBR | 160 | 172 | 5,5 | 10 | 1.134,82 |
| 188630 | AE 41 | NBR | 165 | 177 | 5,5 | 10 | 1.229,30 |
| 189303 | AE 41 | NBR | 180 | 192 | 5,5 | 10 | 1.362,89 |
| 188737 | AE 41 | NBR | 190 | 202 | 5,5 | 10 | 1.587,04 |
| 188738 | AE 41 | NBR | 200 | 212 | 5,5 | 10 | 1.720,39 |
| 189305 | AE 41 | NBR | 210 | 225 | 6,5 | 13 | 2.028,72 |
| 195602 | AE 41 | NBR | 220 | 235 | 6,5 | 13 | 2.347,35 |
| 192046 | AE 41 | NBR | 250 | 265 | 6,5 | 13 | 3.975,31 |

# Raschiatore

NBR 90/METAL

AM 43

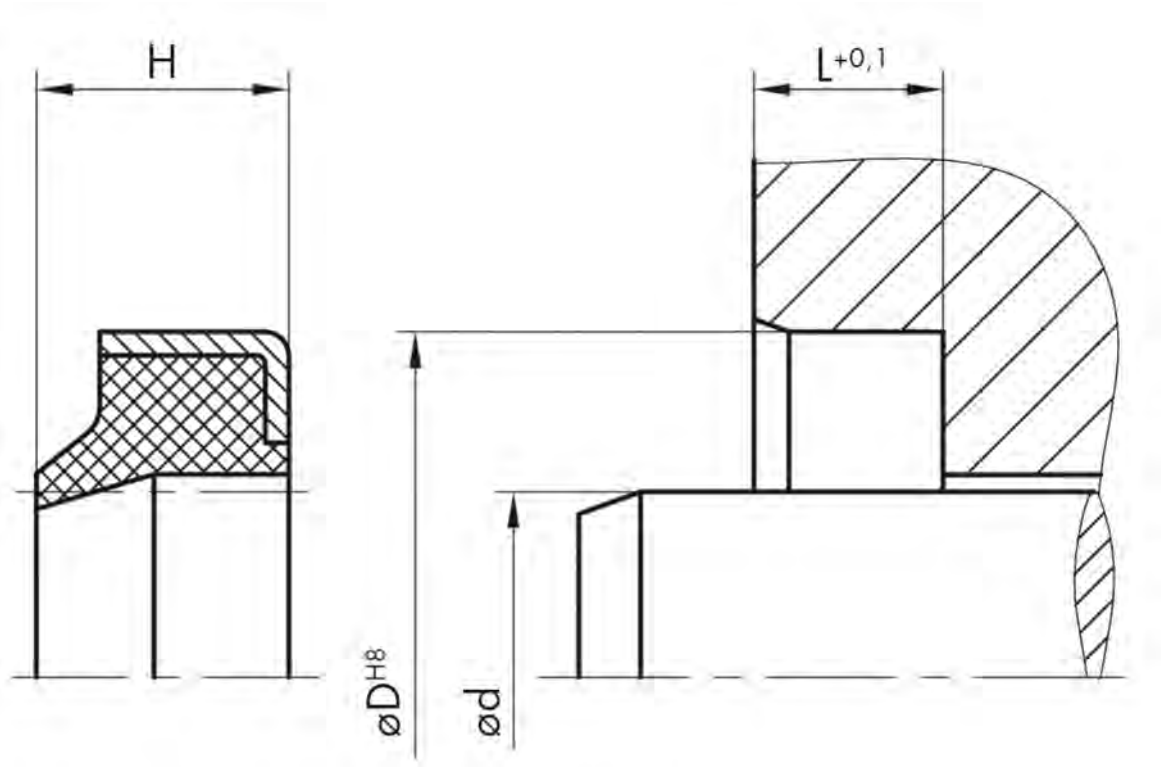
H
L+0,1
øD H8
ød

| CODICE | TIPO | MAT | d mm | D mm | L mm | H mm | LISTINO 5-2016 X 100 € |
|---|---|---|---|---|---|---|---|
| 180383 | AM 43 | NBR | 6 | 13 | 3 | 4,5 | 112,25 |
| 180468 | AM 43 | NBR | 8 | 14 | 3,5 | 5 | 112,25 |
| 180574 | AM 43 | NBR | 8 | 15 | 3 | 5 | 112,25 |
| 180451 | AM 43 | NBR | 8 | 22 | 3 | 4,5 | 112,25 |
| 180327 | AM 43 | NBR | 10 | 16 | 3 | 4,5 | 112,25 |
| 180456 | AM 43 | NBR | 10 | 16 | 5 | 7 | 112,25 |
| 180286 | AM 43 | NBR | 10 | 18 | 5 | 8 | 112,25 |
| 180328 | AM 43 | NBR | 10 | 20 | 5 | 8 | 112,25 |
| 180480 | AM 43 | NBR | 12 | 18 | 3 | 4 | 112,25 |
| 180329 | AM 43 | NBR | 12 | 20 | 4 | 6 | 112,25 |
| 16495 | AM 43 | NBR | 12 | 22 | 5 | 8 | 112,25 |
| 180287 | AM 43 | NBR | 14 | 20 | 4 | 5 | 112,25 |
| 180330 | AM 43 | NBR | 14 | 22 | 3 | 4 | 112,25 |
| 180331 | AM 43 | NBR | 15 | 25 | 5 | 8 | 112,25 |
| 16498 | AM 43 | NBR | 16 | 22 | 3 | 4 | 112,25 |
| 180479 | AM 43 | NBR | 16 | 22 | 3,5 | 5 | 112,25 |
| 180332 | AM 43 | NBR | 16 | 26 | 5 | 8 | 112,25 |
| 180447 | AM 43 | NBR | 16 | 26 | 7 | 10 | 112,25 |
| 180501 | AM 43 | NBR | 18 | 26 | 3 | 4 | 112,25 |
| 180302 | AM 43 | NBR | 18 | 26 | 5 | 7 | 112,25 |
| 180482 | AM 43 | NBR | 18 | 28 | 5 | 6 | 112,25 |
| 180333 | AM 43 | NBR | 18 | 28 | 7 | 10 | 112,25 |
| 180313 | AM 43 | NBR | 20 | 26 | 4 | 7 | 112,25 |
| 180289 | AM 43 | NBR | 20 | 26 | 5 | 8 | 112,25 |
| 180334 | AM 43 | NBR | 20 | 28 | 3,5 | 5 | 112,25 |
| 2951 | AM 43 | NBR | 20 | 28 | 5 | 8 | 112,25 |
| 180335 | AM 43 | NBR | 20 | 30 | 4 | 6 | 112,25 |
| 180495 | AM 43 | NBR | 20 | 30 | 5 | 8 | 112,25 |
| 180336 | AM 43 | NBR | 20 | 30 | 7 | 10 | 112,25 |
| 180476 | AM 43 | NBR | 20 | 35 | 7 | 10 | 112,25 |
| 180564 | AM 43 | NBR | 21 | 28 | 3,5 | 5 | 112,25 |
| 180455 | AM 43 | NBR | 22 | 28 | 5 | 9 | 112,25 |
| 180498 | AM 43 | NBR | 22 | 30 | 5 | 8 | 112,25 |
| 180490 | AM 43 | NBR | 22 | 32 | 5 | 8 | 128,28 |
| 180337 | AM 43 | NBR | 22 | 32 | 7 | 10 | 128,28 |
| 180477 | AM 43 | NBR | 22 | 35 | 5 | 8 | 128,28 |
| 180514 | AM 43 | NBR | 24 | 32 | 5 | 7 | 128,28 |
| 180290 | AM 43 | NBR | 24 | 35 | 7 | 10 | 128,28 |
| 180502 | AM 43 | NBR | 25 | 35 | 3 | 4 | 128,28 |
| 24132 | AM 43 | NBR | 25 | 35 | 5 | 8 | 128,28 |
| 180338 | AM 43 | NBR | 25 | 35 | 7 | 10 | 128,28 |
| 180446 | AM 43 | NBR | 26 | 34 | 5 | 8 | 128,28 |
| 180315 | AM 43 | NBR | 26 | 35 | 7 | 10 | 128,28 |
| 180503 | AM 43 | NBR | 28 | 34 | 5 | 7 | 128,28 |
| 180972 | AM 43 | NBR | 28 | 38 | 5 | 8 | 133,67 |
| 180449 | AM 43 | NBR | 28 | 38 | 7 | 10 | 133,67 |

| CODICE | TIPO | MAT | d mm | D mm | L mm | H mm | LISTINO 5-2016 X 100 € |
|---|---|---|---|---|---|---|---|
| 180339 | AM 43 | NBR | 28 | 40 | 7 | 10 | 133,67 |
| 180489 | AM 43 | NBR | 30 | 40 | 5 | 7 | 133,67 |
| 180340 | AM 43 | NBR | 30 | 40 | 5 | 8 | 133,67 |
| 180341 | AM 43 | NBR | 30 | 40 | 7 | 10 | 133,67 |
| 180517 | AM 43 | NBR | 30 | 42 | 5 | 8 | 133,67 |
| 180463 | AM 43 | NBR | 30 | 42 | 7 | 10 | 133,67 |
| 180464 | AM 43 | NBR | 30 | 45 | 5 | 8 | 133,67 |
| 180457 | AM 43 | NBR | 32 | 40 | 4 | 7 | 133,67 |
| 180466 | AM 43 | NBR | 32 | 40 | 7 | 10 | 133,67 |
| 180460 | AM 43 | NBR | 32 | 42 | 5 | 7 | 160,34 |
| 180381 | AM 43 | NBR | 32 | 42 | 7 | 10 | 160,34 |
| 180342 | AM 43 | NBR | 32 | 45 | 4 | 8 | 165,72 |
| 180382 | AM 43 | NBR | 32 | 45 | 5 | 8 | 165,72 |
| 180343 | AM 43 | NBR | 32 | 45 | 7 | 10 | 165,72 |
| 180527 | AM 43 | NBR | 32 | 50 | 7 | 10 | 165,72 |
| 180481 | AM 43 | NBR | 35 | 45 | 5 | 7 | 165,72 |
| 180344 | AM 43 | NBR | 35 | 45 | 7 | 10 | 165,72 |
| 180462 | AM 43 | NBR | 35 | 47 | 7 | 10 | 176,41 |
| 180472 | AM 43 | NBR | 35 | 50 | 9 | 12 | 176,41 |
| 180292 | AM 43 | NBR | 35 | 52 | 7 | 10 | 176,41 |
| 180345 | AM 43 | NBR | 36 | 45 | 7 | 10 | 176,41 |
| 180487 | AM 43 | NBR | 36 | 46 | 5 | 7 | 176,41 |
| 180293 | AM 43 | NBR | 36 | 46 | 7 | 10 | 176,42 |
| 180346 | AM 43 | NBR | 38 | 48 | 7 | 10 | 176,41 |
| 180347 | AM 43 | NBR | 40 | 50 | 5 | 8 | 176,41 |
| 180348 | AM 43 | NBR | 40 | 50 | 7 | 10 | 176,41 |
| 180349 | AM 43 | NBR | 40 | 52 | 5 | 8 | 203,09 |
| 180448 | AM 43 | NBR | 40 | 52 | 7 | 10 | 203,09 |
| 180473 | AM 43 | NBR | 40 | 55 | 9 | 12 | 203,09 |
| 180519 | AM 43 | NBR | 40 | 62 | 7 | 10 | 203,09 |
| 180350 | AM 43 | NBR | 42 | 52 | 7 | 10 | 203,09 |
| 180483 | AM 43 | NBR | 45 | 55 | 5 | 7 | 203,09 |
| 180351 | AM 43 | NBR | 45 | 55 | 7 | 10 | 203,09 |
| 180352 | AM 43 | NBR | 45 | 60 | 7 | 10 | 229,83 |
| 180353 | AM 43 | NBR | 48 | 60 | 7 | 10 | 229,83 |
| 180492 | AM 43 | NBR | 50 | 56 | 4 | 6 | 229,83 |
| 180354 | AM 43 | NBR | 50 | 56 | 5 | 7 | 229,83 |
| 180484 | AM 43 | NBR | 50 | 60 | 5 | 7 | 229,83 |
| 180355 | AM 43 | NBR | 50 | 60 | 7 | 10 | 229,83 |
| 180575 | AM 43 | NBR | 50 | 62 | 5 | 7 | 251,25 |
| 180439 | AM 43 | NBR | 50 | 65 | 5 | 8 | 251,25 |
| 180356 | AM 43 | NBR | 50 | 65 | 7 | 10 | 251,25 |
| 180440 | AM 43 | NBR | 52 | 62 | 7 | 10 | 251,25 |
| 180357 | AM 43 | NBR | 55 | 63 | 7 | 10 | 251,25 |
| 180453 | AM 43 | NBR | 55 | 65 | 5 | 7 | 251,25 |
| 180358 | AM 43 | NBR | 55 | 65 | 7 | 10 | 251,25 |

| CODICE | TIPO | MAT | d mm | D mm | L mm | H mm | LISTINO 5-2016 X 100 € |
|---|---|---|---|---|---|---|---|
| 180577 | AM 43 | NBR | 55 | 70 | 7 | 10 | 251,25 |
| 59655 | AM 43 | NBR | 56 | 65 | 7 | 10 | 251,25 |
| 180359 | AM 43 | NBR | 56 | 66 | 7 | 10 | 256,56 |
| 180485 | AM 43 | NBR | 60 | 70 | 5 | 7 | 256,56 |
| 180360 | AM 43 | NBR | 60 | 70 | 7 | 10 | 256,56 |
| 180450 | AM 43 | NBR | 60 | 74 | 5 | 8 | 336,75 |
| 180380 | AM 43 | NBR | 60 | 75 | 7 | 10 | 336,75 |
| 180441 | AM 43 | NBR | 60 | 80 | 7 | 10 | 336,75 |
| 180296 | AM 43 | NBR | 63 | 73 | 7 | 10 | 336,74 |
| 180971 | AM 43 | NBR | 63 | 75 | 7 | 10 | 336,75 |
| 180486 | AM 43 | NBR | 65 | 75 | 5 | 7 | 336,75 |
| 180361 | AM 43 | NBR | 65 | 75 | 7 | 10 | 336,75 |
| 180452 | AM 43 | NBR | 70 | 80 | 5 | 7 | 368,80 |
| 180362 | AM 43 | NBR | 70 | 80 | 7 | 10 | 368,80 |
| 180363 | AM 43 | NBR | 75 | 85 | 7 | 10 | 368,80 |
| 180465 | AM 43 | NBR | 75 | 87 | 5 | 7 | 469,80 |
| 180509 | AM 43 | NBR | 78 | 88 | 7 | 10 | 469,80 |
| 180364 | AM 43 | NBR | 80 | 90 | 7 | 10 | 469,80 |
| 180578 | AM 43 | NBR | 80 | 100 | 12 | 15 | 521,99 |
| 180365 | AM 43 | NBR | 85 | 95 | 7 | 10 | 521,99 |
| 180366 | AM 43 | NBR | 90 | 100 | 7 | 10 | 521,99 |
| 180367 | AM 43 | NBR | 95 | 105 | 7 | 10 | 529,20 |
| 4881 | AM 43 | NBR | 100 | 110 | 5 | 8 | 555,94 |
| 180368 | AM 43 | NBR | 100 | 110 | 7 | 10 | 555,94 |
| 180508 | AM 43 | NBR | 100 | 115 | 8 | 10 | 694,87 |
| 16537 | AM 43 | NBR | 105 | 115 | 7 | 10 | 694,87 |
| 180369 | AM 43 | NBR | 110 | 120 | 7 | 10 | 694,87 |
| 180370 | AM 43 | NBR | 115 | 125 | 7 | 10 | 743,00 |
| 180371 | AM 43 | NBR | 120 | 130 | 7 | 10 | 791,08 |
| 180308 | AM 43 | NBR | 125 | 140 | 7 | 10 | 898,02 |
| 180372 | AM 43 | NBR | 125 | 140 | 9 | 12 | 898,02 |
| 180373 | AM 43 | NBR | 130 | 145 | 9 | 12 | 903,35 |
| 180297 | AM 43 | NBR | 135 | 145 | 7 | 10 | 903,35 |
| 180478 | AM 43 | NBR | 135 | 150 | 9 | 12 | 903,35 |
| 180374 | AM 43 | NBR | 140 | 155 | 9 | 12 | 972,83 |
| 180474 | AM 43 | NBR | 145 | 160 | 9 | 12 | 983,53 |
| 180375 | AM 43 | NBR | 150 | 165 | 9 | 12 | 1.138,55 |
| 180376 | AM 43 | NBR | 160 | 175 | 9 | 12 | 1.138,55 |
| 180377 | AM 43 | NBR | 170 | 185 | 10 | 14 | 2.438,41 |
| 180378 | AM 43 | NBR | 180 | 195 | 10 | 14 | 2.438,41 |
| 180535 | AM 43 | NBR | 190 | 210 | 10 | 14 | 2.998,68 |
| 180299 | AM 43 | NBR | 200 | 215 | 9 | 12 | 2.998,68 |
| 180379 | AM 43 | NBR | 200 | 220 | 12 | 16 | 2.998,68 |
| 180316 | AM 43 | NBR | 210 | 230 | 12 | 16 | 3.874,15 |
| 16549 | AM 43 | NBR | 220 | 240 | 12 | 16 | 4.466,24 |
| 180317 | AM 43 | NBR | 240 | 260 | 12 | 16 | 5.017,26 |

# RASCHIATORE - AM 43



| CODICE | TIPO | MAT | d mm | D mm | L mm | H mm | LISTINO 5-2016 X 100 € |
|---|---|---|---|---|---|---|---|
| 180300 | AM 43 | NBR | 250 | 270 | 12 | 16 | 5.185,44 |
| 180497 | AM 43 | NBR | 275 | 300 | 12 | 16 | 7.955,58 |
| 180319 | AM 43 | NBR | 400 | 420 | 12 | 16 | 11.774,69 |

# Raschiatore

NBR 90/METAL

AM 45

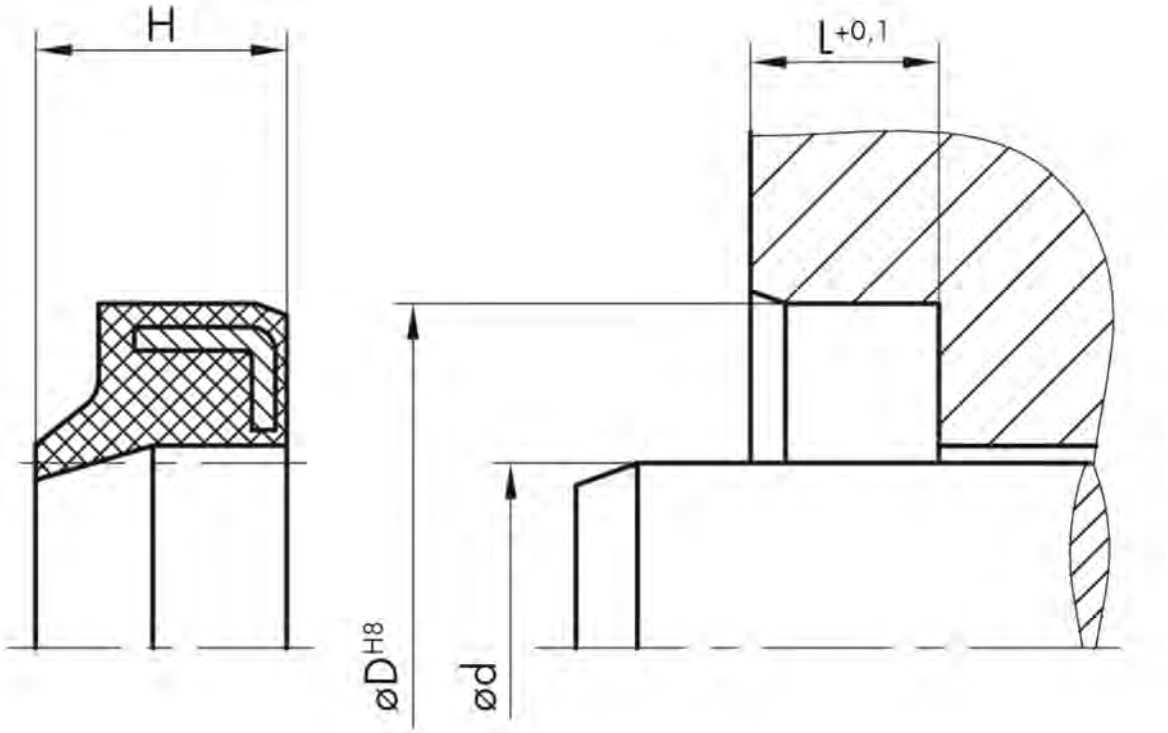
H
L+0,1
øD H8
ød

| CODICE | TIPO | MAT | d mm | D mm | L mm | H mm | LISTINO 5-2016 X 100 € |
|---|---|---|---|---|---|---|---|
| 180384 | AM 45 | NBR | 6 | 13 | 3,5 | 4,5 | 106,75 |
| 21260 | AM 45 | NBR | 8 | 14 | 4 | 5 | 106,75 |
| 21261 | AM 45 | NBR | 10 | 16 | 4 | 5 | 106,75 |
| 180385 | AM 45 | NBR | 10 | 20 | 5,5 | 8 | 106,75 |
| 180417 | AM 45 | NBR | 12 | 18 | 4 | 5 | 106,75 |
| 180536 | AM 45 | NBR | 12 | 20 | 4,5 | 6 | 106,75 |
| 180386 | AM 45 | NBR | 12 | 22 | 5,5 | 8 | 106,75 |
| 180418 | AM 45 | NBR | 14 | 20 | 4 | 5 | 106,75 |
| 180505 | AM 45 | NBR | 14 | 22 | 3,5 | 4 | 106,75 |
| 21264 | AM 45 | NBR | 15 | 21 | 4 | 5 | 106,75 |
| 180387 | AM 45 | NBR | 15 | 25 | 5,5 | 7 | 106,75 |
| 180443 | AM 45 | NBR | 16 | 22 | 3,5 | 4 | 106,75 |
| 180321 | AM 45 | NBR | 16 | 22 | 4 | 5 | 106,75 |
| 65390 | AM 45 | NBR | 16 | 24 | 4 | 5 | 106,75 |
| 180388 | AM 45 | NBR | 16 | 26 | 5,5 | 8 | 106,75 |
| 180419 | AM 45 | NBR | 18 | 28 | 5,5 | 7 | 106,75 |
| 21228 | AM 45 | NBR | 18 | 28 | 7,5 | 10 | 106,75 |
| 180322 | AM 45 | NBR | 20 | 28 | 4 | 5 | 106,75 |
| 149750 | AM 45 | NBR | 20 | 28 | 7,5 | 10 | 106,75 |
| 180324 | AM 45 | NBR | 20 | 30 | 5,5 | 7 | 106,75 |
| 180389 | AM 45 | NBR | 20 | 30 | 7,5 | 10 | 106,75 |
| 180420 | AM 45 | NBR | 22 | 32 | 5,5 | 7 | 106,75 |
| 180390 | AM 45 | NBR | 22 | 32 | 7,5 | 10 | 132,21 |
| 180391 | AM 45 | NBR | 24 | 35 | 5,5 | 8 | 132,21 |
| 180467 | AM 45 | NBR | 25 | 33 | 4,5 | 7 | 132,21 |
| 180421 | AM 45 | NBR | 25 | 35 | 5,5 | 7 | 132,21 |
| 180392 | AM 45 | NBR | 25 | 35 | 7,5 | 10 | 132,21 |
| 180422 | AM 45 | NBR | 28 | 38 | 5,5 | 7 | 132,21 |
| 180393 | AM 45 | NBR | 28 | 40 | 7,5 | 10 | 132,21 |
| 180423 | AM 45 | NBR | 30 | 40 | 5,5 | 7 | 132,21 |
| 180394 | AM 45 | NBR | 30 | 40 | 7,5 | 10 | 132,21 |
| 180424 | AM 45 | NBR | 32 | 42 | 5,5 | 7 | 152,54 |
| 180425 | AM 45 | NBR | 32 | 42 | 7,5 | 10 | 152,54 |
| 180395 | AM 45 | NBR | 32 | 45 | 7,5 | 10 | 152,54 |
| 180530 | AM 45 | NBR | 35 | 45 | 5,5 | 7 | 152,54 |
| 180396 | AM 45 | NBR | 35 | 45 | 7,5 | 10 | 152,54 |
| 180397 | AM 45 | NBR | 36 | 45 | 7,5 | 10 | 152,54 |
| 180426 | AM 45 | NBR | 36 | 46 | 5,5 | 7 | 152,54 |
| 21239 | AM 45 | NBR | 38 | 48 | 7,5 | 10 | 152,54 |
| 180427 | AM 45 | NBR | 40 | 50 | 5,5 | 8 | 152,54 |
| 180398 | AM 45 | NBR | 40 | 50 | 7,5 | 10 | 152,54 |
| 180428 | AM 45 | NBR | 42 | 52 | 5,5 | 7 | 193,23 |
| 180399 | AM 45 | NBR | 42 | 52 | 7,5 | 10 | 193,23 |
| 180429 | AM 45 | NBR | 45 | 55 | 5,5 | 7 | 193,23 |
| 180400 | AM 45 | NBR | 45 | 55 | 7,5 | 10 | 193,23 |
| 180494 | AM 45 | NBR | 45 | 60 | 7,5 | 10 | 213,03 |

# RASCHIATORE - AM 45

NBR 90/METAL

| CODICE | TIPO | MAT | d mm | D mm | L mm | H mm | LISTINO 5-2016 X 100 € |
|---|---|---|---|---|---|---|---|
| 180401 | AM 45 | NBR | 48 | 60 | 7,5 | 10 | 213,03 |
| 180430 | AM 45 | NBR | 50 | 60 | 5,5 | 7 | 213,03 |
| 180532 | AM 45 | NBR | 50 | 60 | 5,5 | 8 | 213,03 |
| 180402 | AM 45 | NBR | 50 | 60 | 7,5 | 10 | 213,03 |
| 180325 | AM 45 | NBR | 50 | 65 | 7,5 | 10 | 213,03 |
| 180431 | AM 45 | NBR | 55 | 65 | 5,5 | 7 | 213,03 |
| 180404 | AM 45 | NBR | 55 | 65 | 7,5 | 10 | 213,03 |
| 180432 | AM 45 | NBR | 56 | 66 | 5,5 | 7 | 259,30 |
| 180433 | AM 45 | NBR | 60 | 70 | 5,5 | 7 | 259,30 |
| 21247 | AM 45 | NBR | 60 | 70 | 7,5 | 10 | 259,30 |
| 180434 | AM 45 | NBR | 63 | 73 | 5,5 | 7 | 294,76 |
| 180326 | AM 45 | NBR | 63 | 75 | 7,5 | 10 | 294,76 |
| 180435 | AM 45 | NBR | 65 | 75 | 5,5 | 7 | 325,45 |
| 180405 | AM 45 | NBR | 65 | 75 | 7,5 | 10 | 325,45 |
| 180436 | AM 45 | NBR | 70 | 80 | 5,5 | 7 | 325,45 |
| 180406 | AM 45 | NBR | 70 | 80 | 7,5 | 10 | 325,45 |
| 180437 | AM 45 | NBR | 75 | 83 | 7,5 | 10 | 325,45 |
| 180407 | AM 45 | NBR | 75 | 85 | 7,5 | 10 | 325,45 |
| 180438 | AM 45 | NBR | 80 | 88 | 7,5 | 10 | 325,45 |
| 180408 | AM 45 | NBR | 80 | 90 | 7,5 | 10 | 325,45 |
| 180410 | AM 45 | NBR | 90 | 100 | 7,5 | 10 | 476,94 |
| 180411 | AM 45 | NBR | 95 | 105 | 7,5 | 10 | 560,37 |
| 180412 | AM 45 | NBR | 100 | 110 | 7,5 | 10 | 596,50 |
| 180413 | AM 45 | NBR | 105 | 115 | 7,5 | 10 | 680,28 |
| 180414 | AM 45 | NBR | 110 | 120 | 7,5 | 10 | 808,45 |
| 180415 | AM 45 | NBR | 115 | 125 | 7,5 | 10 | 925,07 |
| 180416 | AM 45 | NBR | 120 | 130 | 7,5 | 10 | 941,05 |

# Raschiatore

PTFE BRONZO/OR NBR

AD 60

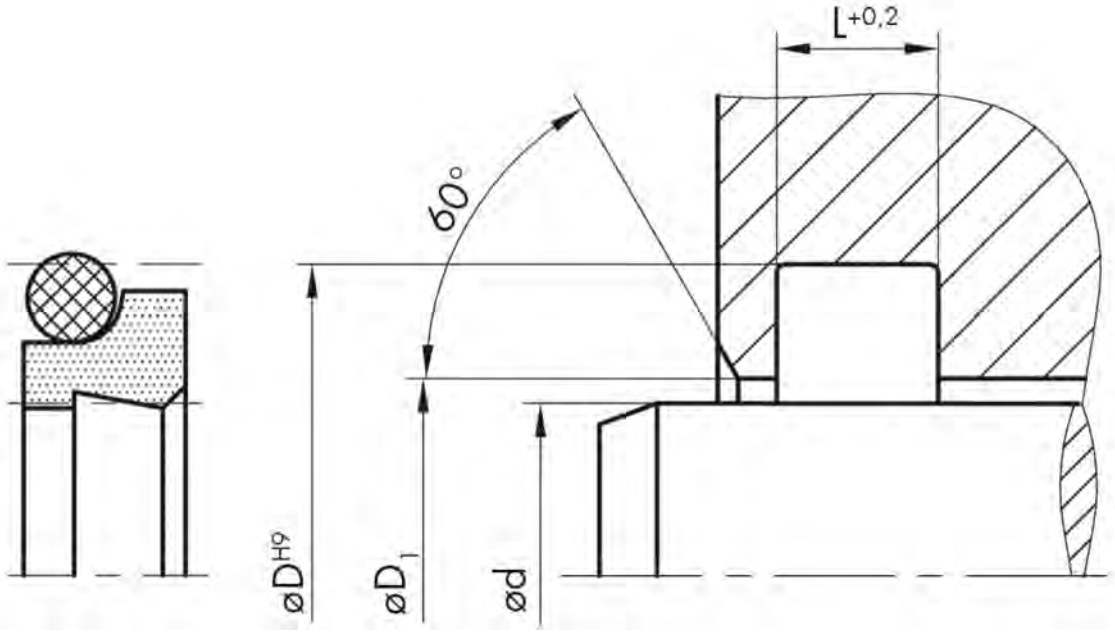
60°
øD H9
øD1
L+0,2
ød

| CODICE | TIPO | MAT | d mm | D mm | L mm | LISTINO 5-2016 X1 € |
|---|---|---|---|---|---|---|
| 174009 | AD 60 | PTFE | 6 | 10,8 | 3,7 | 8,37 |
| 174013 | AD 60 | PTFE | 10 | 14,8 | 3,7 | 8,57 |
| 82862 | AD 60 | PTFE | 12 | 18,8 | 5 | 9,34 |
| 174015 | AD 60 | PTFE | 14 | 20,8 | 5 | 9,65 |
| 82864 | AD 60 | PTFE | 15 | 21,8 | 5 | 9,65 |
| 174018 | AD 60 | PTFE | 16 | 22,8 | 5 | 10,26 |
| 81668 | AD 60 | PTFE | 18 | 24,8 | 5 | 10,58 |
| 82866 | AD 60 | PTFE | 20 | 26,8 | 5 | 10,72 |
| 82867 | AD 60 | PTFE | 22 | 28,8 | 5 | 10,95 |
| 82868 | AD 60 | PTFE | 25 | 31,8 | 5 | 11,33 |
| 82869 | AD 60 | PTFE | 28 | 34,8 | 5 | 12,25 |
| 82870 | AD 60 | PTFE | 30 | 36,8 | 5 | 12,88 |
| 82871 | AD 60 | PTFE | 32 | 38,8 | 5 | 13,47 |
| 83896 | AD 60 | PTFE | 34 | 40,8 | 5 | 14,10 |
| 81483 | AD 60 | PTFE | 35 | 41,8 | 5 | 14,10 |
| 81623 | AD 60 | PTFE | 36 | 42,8 | 5 | 14,19 |
| 82872 | AD 60 | PTFE | 38 | 44,8 | 5 | 14,27 |
| 82873 | AD 60 | PTFE | 40 | 46,8 | 5 | 14,40 |
| 82874 | AD 60 | PTFE | 42 | 48,8 | 5 | 14,40 |
| 82875 | AD 60 | PTFE | 45 | 51,8 | 5 | 15,47 |
| 81484 | AD 60 | PTFE | 50 | 56,8 | 5 | 17,46 |
| 174019 | AD 60 | PTFE | 52 | 58,8 | 5 | 17,63 |
| 174021 | AD 60 | PTFE | 55 | 61,8 | 5 | 18,38 |
| 81485 | AD 60 | PTFE | 56 | 62,8 | 5 | 18,38 |
| 82878 | AD 60 | PTFE | 60 | 66,8 | 5 | 20,53 |
| 82879 | AD 60 | PTFE | 63 | 69,8 | 5 | 21,27 |
| 82880 | AD 60 | PTFE | 65 | 73,8 | 6 | 23,44 |
| 151701 | AD 60 | PTFE | 67 | 75,8 | 6 | 23,44 |
| 82881 | AD 60 | PTFE | 70 | 78,8 | 6 | 29,10 |
| 82467 | AD 60 | PTFE | 75 | 83,8 | 6 | 31,40 |
| 82882 | AD 60 | PTFE | 80 | 88,8 | 6 | 32,94 |
| 174023 | AD 60 | PTFE | 85 | 93,8 | 6 | 33,70 |
| 82887 | AD 60 | PTFE | 90 | 98,8 | 6 | 35,23 |
| 82888 | AD 60 | PTFE | 95 | 103,8 | 6 | 36,75 |
| 82889 | AD 60 | PTFE | 100 | 108,8 | 6 | 37,52 |
| 174025 | AD 60 | PTFE | 105 | 113,8 | 6 | 40,29 |
| 82892 | AD 60 | PTFE | 110 | 118,8 | 6 | 42,89 |
| 174027 | AD 60 | PTFE | 115 | 123,8 | 6 | 48,12 |
| 82894 | AD 60 | PTFE | 120 | 128,8 | 6 | 52,09 |
| 82895 | AD 60 | PTFE | 125 | 133,8 | 6 | 77,62 |
| 82896 | AD 60 | PTFE | 130 | 138,8 | 6 | 77,62 |
| 82898 | AD 60 | PTFE | 140 | 148,8 | 6 | 96,35 |
| 78586 | AD 60 | PTFE | 150 | 158,8 | 6 | 111,07 |
| 174031 | AD 60 | PTFE | 160 | 168,8 | 6 | 125,79 |
| 174033 | AD 60 | PTFE | 170 | 178,8 | 6 | 135,16 |
| 174035 | AD 60 | PTFE | 180 | 188,8 | 6 | 149,88 |

# RASCHIATORE - AD 60

PTFE BRONZO/OR NBR

| CODICE | TIPO | MAT | d mm | D mm | L mm | LISTINO 5-2016 X1 € |
|---|---|---|---|---|---|---|
| 174037 | AD 60 | PTFE | 190 | 198,8 | 6 | 161,92 |
| 82916 | AD 60 | PTFE | 200 | 208,8 | 6 | 206,08 |
| 82917 | AD 60 | PTFE | 210 | 218,8 | 6 | 236,86 |
| 82918 | AD 60 | PTFE | 220 | 228,8 | 6 | 246,12 |
| 82941 | AD 60 | PTFE | 240 | 248,8 | 6 | 287,71 |
| 82943 | AD 60 | PTFE | 260 | 272,2 | 8,4 | 287,71 |
| 174043 | AD 60 | PTFE | 270 | 282,2 | 8,4 | 363,99 |
| 82947 | AD 60 | PTFE | 300 | 312,2 | 8,4 | 390,75 |
| 83032 | AD 60 | PTFE | 320 | 332,2 | 8,4 | 432,24 |
| 83926 | AD 60 | PTFE | 440 | 456 | 11 | 808,27 |
| 83929 | AD 60 | PTFE | 480 | 496 | 11 | 980,08 |

# Raschiatore

PTFE BRONZO/OR NBR

AD 61

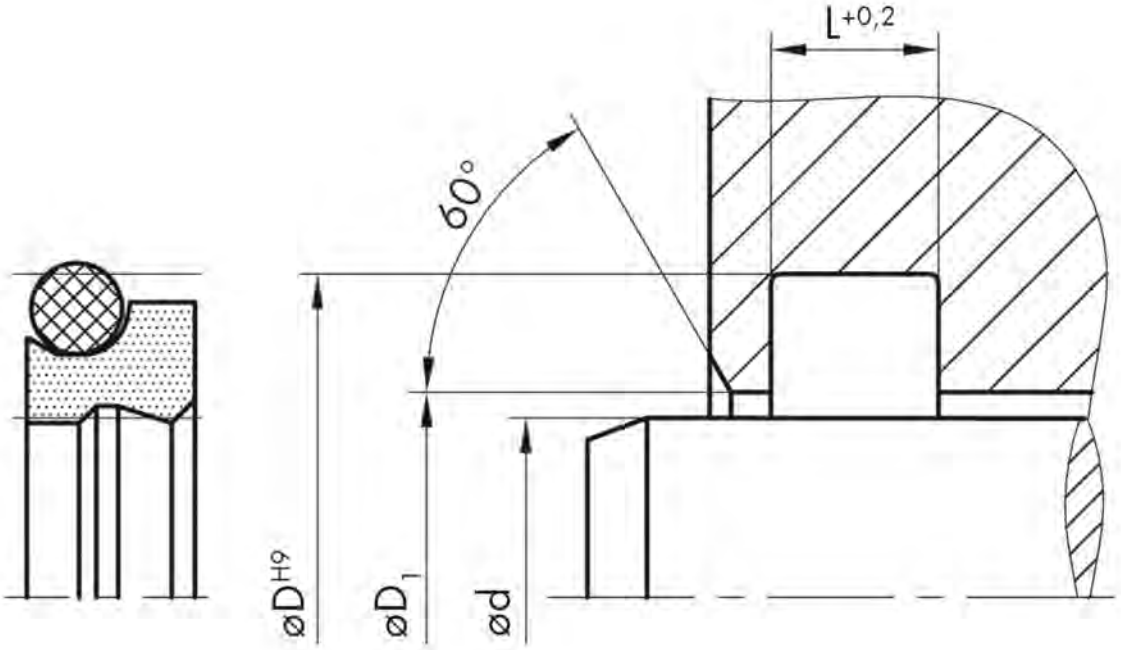
60°
øD H9
øD1
L+0,2
ød

| CODICE | TIPO | MAT | d mm | D mm | L mm | LISTINO 5-2016 X1 € |
|---|---|---|---|---|---|---|
| 82454 | AD 61 | PTFE | 20 | 27,6 | 4,2 | 11,79 |
| 174050 | AD 61 | PTFE | 22 | 29,6 | 4,2 | 12,05 |
| 174052 | AD 61 | PTFE | 24 | 31,6 | 4,2 | 12,47 |
| 82560 | AD 61 | PTFE | 25 | 32,6 | 4,2 | 12,47 |
| 82607 | AD 61 | PTFE | 28 | 35,6 | 4,2 | 13,47 |
| 81480 | AD 61 | PTFE | 30 | 37,6 | 4,2 | 14,17 |
| 82561 | AD 61 | PTFE | 32 | 39,6 | 4,2 | 14,82 |
| 82562 | AD 61 | PTFE | 35 | 42,6 | 4,2 | 15,50 |
| 82563 | AD 61 | PTFE | 36 | 43,6 | 4,2 | 15,61 |
| 174054 | AD 61 | PTFE | 38 | 45,6 | 4,2 | 15,69 |
| 82565 | AD 61 | PTFE | 40 | 48,8 | 6,3 | 15,83 |
| 174056 | AD 61 | PTFE | 42 | 50,8 | 6,3 | 15,83 |
| 82567 | AD 61 | PTFE | 45 | 53,8 | 6,3 | 17,03 |
| 83851 | AD 61 | PTFE | 48 | 56,8 | 6,3 | 18,43 |
| 82568 | AD 61 | PTFE | 50 | 58,8 | 6,3 | 19,20 |
| 174058 | AD 61 | PTFE | 52 | 60,8 | 6,3 | 19,40 |
| 82570 | AD 61 | PTFE | 55 | 63,8 | 6,3 | 20,23 |
| 82571 | AD 61 | PTFE | 56 | 64,8 | 6,3 | 20,23 |
| 82572 | AD 61 | PTFE | 60 | 68,8 | 6,3 | 22,58 |
| 82573 | AD 61 | PTFE | 63 | 71,8 | 6,3 | 23,40 |
| 82574 | AD 61 | PTFE | 65 | 73,8 | 6,3 | 25,78 |
| 82575 | AD 61 | PTFE | 70 | 82,2 | 8,1 | 32,01 |
| 174060 | AD 61 | PTFE | 75 | 87,2 | 8,1 | 34,54 |
| 82577 | AD 61 | PTFE | 80 | 92,2 | 8,1 | 36,23 |
| 82578 | AD 61 | PTFE | 85 | 97,2 | 8,1 | 37,08 |
| 122054 | AD 61 | PTFE | 87 | 99,2 | 8,1 | 38,76 |
| 81486 | AD 61 | PTFE | 90 | 102,2 | 8,1 | 38,76 |
| 174062 | AD 61 | PTFE | 95 | 107,2 | 8,1 | 40,42 |
| 82580 | AD 61 | PTFE | 100 | 112,2 | 8,1 | 41,27 |
| 82581 | AD 61 | PTFE | 105 | 117,2 | 8,1 | 44,32 |
| 82582 | AD 61 | PTFE | 110 | 122,2 | 8,1 | 47,18 |
| 82583 | AD 61 | PTFE | 115 | 127,2 | 8,1 | 52,93 |
| 82584 | AD 61 | PTFE | 120 | 132,2 | 8,1 | 57,29 |
| 82585 | AD 61 | PTFE | 125 | 137,2 | 8,1 | 85,38 |
| 174064 | AD 61 | PTFE | 130 | 142,2 | 8,1 | 85,38 |
| 174066 | AD 61 | PTFE | 135 | 147,2 | 8,1 | 97,15 |
| 82588 | AD 61 | PTFE | 140 | 156 | 9,5 | 105,99 |
| 82589 | AD 61 | PTFE | 150 | 166 | 9,5 | 122,17 |
| 82590 | AD 61 | PTFE | 160 | 176 | 9,5 | 138,50 |
| 82591 | AD 61 | PTFE | 170 | 186 | 9,5 | 148,67 |
| 174068 | AD 61 | PTFE | 175 | 191 | 9,5 | 164,87 |
| 82592 | AD 61 | PTFE | 180 | 196 | 9,5 | 164,87 |
| 174070 | AD 61 | PTFE | 190 | 206 | 9,5 | 178,11 |
| 82594 | AD 61 | PTFE | 200 | 216 | 9,5 | 226,69 |
| 174072 | AD 61 | PTFE | 210 | 226 | 9,5 | 260,55 |
| 82596 | AD 61 | PTFE | 220 | 236 | 9,5 | 270,73 |

# RASCHIATORE - AD 61

PTFE BRONZO/OR NBR

| CODICE | TIPO | MAT | d mm | D mm | L mm | LISTINO 5-2016 X1 € |
|---|---|---|---|---|---|---|
| 82597 | AD 61 | PTFE | 230 | 246 | 9,5 | 282,63 |
| 82598 | AD 61 | PTFE | 240 | 256 | 9,5 | 316,48 |
| 82599 | AD 61 | PTFE | 250 | 266 | 9,5 | 316,48 |
| 82600 | AD 61 | PTFE | 260 | 276 | 9,5 | 316,48 |
| 82601 | AD 61 | PTFE | 270 | 286 | 9,5 | 400,39 |
| 82602 | AD 61 | PTFE | 280 | 296 | 9,5 | 400,39 |
| 174074 | AD 61 | PTFE | 290 | 306 | 9,5 | 400,39 |
| 82604 | AD 61 | PTFE | 300 | 316 | 9,5 | 429,83 |
| 82605 | AD 61 | PTFE | 310 | 326 | 9,5 | 456,33 |
| 82606 | AD 61 | PTFE | 320 | 336 | 9,5 | 475,45 |
| 83874 | AD 61 | PTFE | 350 | 366 | 9,5 | 531,72 |
| 83875 | AD 61 | PTFE | 360 | 376 | 9,5 | 559,24 |
| 83877 | AD 61 | PTFE | 400 | 424 | 14 | 585,69 |
| 83878 | AD 61 | PTFE | 440 | 464 | 14 | 889,10 |
| 160139 | AD 61 | PTFE | 450 | 474 | 14 | 985,64 |
| 157054 | AD 61 | PTFE | 468 | 492 | 14 | 1.073,80 |

# Raschiatore

TPU 90

AE 42

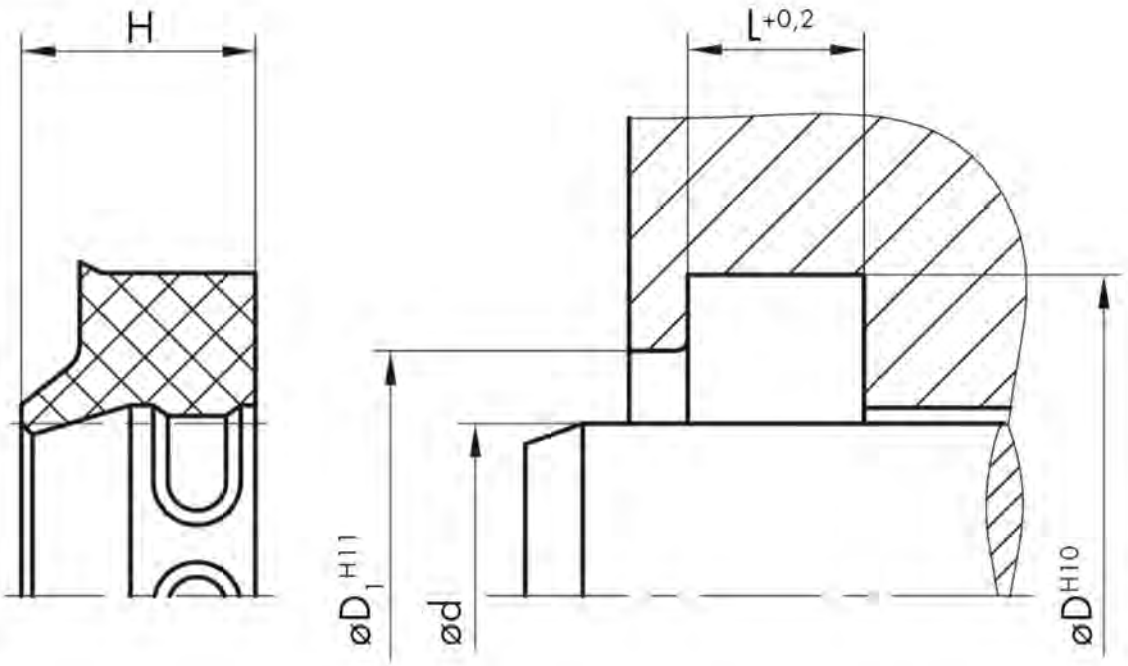
H
L+0,2
øD1 H11
ød
øD H10

| CODICE | TIPO | MAT | d mm | D mm | L mm | H mm | LISTINO 5-2016 X 100 € |
|---|---|---|---|---|---|---|---|
| 188880 | AE 42 | TPU | 8 | 14,6 | 3,8 | 4,5 | 129,40 |
| 192732 | AE 42 | TPU | 12 | 18,6 | 3,8 | 5 | 129,40 |
| 192825 | AE 42 | TPU | 14 | 20,6 | 3,8 | 5 | 144,46 |
| 193203 | AE 42 | TPU | 16 | 22,6 | 3,9 | 5 | 144,46 |
| 188418 | AE 42 | TPU | 16 | 24,6 | 5,3 | 7 | 144,46 |
| 188638 | AE 42 | TPU | 18 | 24,6 | 3,8 | 5 | 144,46 |
| 188901 | AE 42 | TPU | 18 | 26,6 | 5,3 | 7 | 144,46 |
| 188881 | AE 42 | TPU | 20 | 28,3 | 5 | 7 | 144,46 |
| 188413 | AE 42 | TPU | 20 | 28,6 | 5,3 | 7 | 144,46 |
| 190548 | AE 42 | TPU | 22 | 30,6 | 5,3 | 7 | 162,51 |
| 188861 | AE 42 | TPU | 25 | 33,3 | 5 | 7 | 162,51 |
| 188760 | AE 42 | TPU | 25 | 33,6 | 5,3 | 7 | 162,51 |
| 188093 | AE 42 | TPU | 28 | 36,6 | 5,3 | 7 | 162,51 |
| 188414 | AE 42 | TPU | 30 | 38,6 | 5,3 | 7 | 177,56 |
| 188308 | AE 42 | TPU | 32 | 40,6 | 5,3 | 7 | 177,56 |
| 188562 | AE 42 | TPU | 35 | 43,6 | 5,3 | 7 | 177,56 |
| 188309 | AE 42 | TPU | 36 | 44,6 | 5,3 | 7 | 177,56 |
| 122095 | AE 42 | TPU | 40 | 48,6 | 4,3 | 7 | 210,65 |
| 188191 | AE 42 | TPU | 40 | 48,6 | 5,3 | 7 | 210,65 |
| 188563 | AE 42 | TPU | 42 | 50,6 | 5,3 | 7 | 210,65 |
| 188415 | AE 42 | TPU | 45 | 53,6 | 5,3 | 7 | 210,65 |
| 188412 | AE 42 | TPU | 45 | 55,6 | 5,3 | 7 | 210,65 |
| 173629 | AE 42 | TPU | 45 | 60 | 4,3 | 6 | 243,76 |
| 188176 | AE 42 | TPU | 50 | 58,6 | 5,3 | 7 | 243,76 |
| 188899 | AE 42 | TPU | 50 | 60,6 | 5,3 | 7 | 273,85 |
| 173631 | AE 42 | TPU | 53 | 61,6 | 5,3 | 7 | 273,85 |
| 188425 | AE 42 | TPU | 55 | 63,6 | 5,3 | 7 | 273,85 |
| 188411 | AE 42 | TPU | 55 | 65,6 | 5,3 | 7 | 273,85 |
| 189361 | AE 42 | TPU | 56 | 66,6 | 5,3 | 7 | 273,85 |
| 188190 | AE 42 | TPU | 60 | 68,6 | 5,3 | 7 | 273,85 |
| 189398 | AE 42 | TPU | 60 | 70,6 | 5,3 | 7 | 273,85 |
| 192733 | AE 42 | TPU | 60 | 70,6 | 5,5 | 7 | 273,85 |
| 188761 | AE 42 | TPU | 63 | 71,6 | 5,3 | 7 | 273,85 |
| 188423 | AE 42 | TPU | 63 | 73,6 | 5,3 | 7 | 273,85 |
| 192826 | AE 42 | TPU | 65 | 73,6 | 5,3 | 7 | 273,85 |
| 193090 | AE 42 | TPU | 65 | 75,6 | 5,3 | 7 | 273,85 |
| 173634 | AE 42 | TPU | 65 | 76,6 | 6 | 7 | 273,85 |
| 133367 | AE 42 | TPU | 65 | 77,2 | 7,2 | 12 | 273,85 |
| 188416 | AE 42 | TPU | 70 | 78,6 | 5,3 | 7 | 273,85 |
| 188409 | AE 42 | TPU | 70 | 80,6 | 5,3 | 7 | 273,85 |
| 188179 | AE 42 | TPU | 70 | 82,6 | 7,2 | 12 | 273,85 |
| 192862 | AE 42 | TPU | 73 | 81,6 | 5,3 | 7 | 273,85 |
| 173646 | AE 42 | TPU | 73 | 83,6 | 7,2 | 12 | 273,85 |
| 194650 | AE 42 | TPU | 75 | 83,2 | 5,3 | 7 | 273,85 |
| 188171 | AE 42 | TPU | 75 | 87,2 | 7,2 | 12 | 273,85 |
| 173647 | AE 42 | TPU | 78 | 88,6 | 5,5 | 7 | 306,96 |

| CODICE | TIPO | MAT | d mm | D mm | L mm | H mm | LISTINO 5-2016 X 100 € |
|---|---|---|---|---|---|---|---|
| 194058 | AE 42 | TPU | 78 | 92,2 | 7,2 | 12 | 340,07 |
| 189766 | AE 42 | TPU | 80 | 88,6 | 5,3 | 7 | 306,96 |
| 194053 | AE 42 | TPU | 80 | 92,2 | 7,2 | 12 | 340,07 |
| 188310 | AE 42 | TPU | 85 | 93,6 | 5,3 | 7 | 340,07 |
| 192734 | AE 42 | TPU | 85 | 97,2 | 7,2 | 12 | 340,07 |
| 193085 | AE 42 | TPU | 90 | 102,2 | 6 | 8 | 340,07 |
| 192651 | AE 42 | TPU | 90 | 102,2 | 7,2 | 12 | 340,07 |
| 192735 | AE 42 | TPU | 95 | 107,2 | 7,2 | 12 | 388,20 |
| 189362 | AE 42 | TPU | 97 | 105 | 5 | 7 | 403,25 |
| 188311 | AE 42 | TPU | 100 | 112,2 | 7,2 | 12 | 403,25 |
| 22902 | AE 42 | TPU | 105 | 117,2 | 7,2 | 12 | 403,25 |
| 190503 | AE 42 | TPU | 110 | 122,2 | 7,2 | 12 | 403,25 |
| 192740 | AE 42 | TPU | 115 | 127,2 | 7,2 | 12 | 451,41 |
| 173648 | AE 42 | TPU | 118 | 126 | 5 | 7 | 451,41 |
| 192736 | AE 42 | TPU | 120 | 132,2 | 7,2 | 12 | 484,51 |
| 188074 | AE 42 | TPU | 125 | 137,6 | 7,2 | 12 | 502,57 |
| 193694 | AE 42 | TPU | 125 | 140 | 10,2 | 16 | 532,66 |
| 173649 | AE 42 | TPU | 128 | 140,2 | 7,2 | 12 | 532,66 |
| 173393 | AE 42 | TPU | 135 | 147 | 7,2 | 12 | 580,81 |
| 188900 | AE 42 | TPU | 140 | 155 | 10,2 | 16 | 598,87 |
| 173650 | AE 42 | TPU | 143 | 151 | 5,5 | 7 | 628,97 |
| 173640 | AE 42 | TPU | 145 | 157,2 | 7,2 | 12 | 628,97 |
| 189360 | AE 42 | TPU | 150 | 162 | 7,2 | 12 | 710,22 |
| 188426 | AE 42 | TPU | 150 | 165 | 10,2 | 16 | 743,32 |
| 192731 | AE 42 | TPU | 160 | 172 | 7,2 | 12 | 987,08 |
| 188133 | AE 42 | TPU | 160 | 175 | 10,2 | 16 | 987,08 |
| 192830 | AE 42 | TPU | 170 | 185 | 10,2 | 16 | 1.275,98 |
| 188424 | AE 42 | TPU | 180 | 200 | 10,2 | 18 | 1.519,74 |
| 22917 | AE 42 | TPU | 200 | 215,2 | 10,2 | 16 | 1.778,53 |
| 197381 | AE 42 | TPU | 200 | 215,2 | 10,2 | 16 | 1.778,53 |
| 188762 | AE 42 | TPU | 200 | 220 | 10,2 | 18 | 1.778,53 |
| 173642 | AE 42 | TPU | 210 | 225,2 | 10,2 | 16 | 2.091,52 |
| 173643 | AE 42 | TPU | 240 | 255,2 | 10,2 | 16 | 5.979,63 |
| 173644 | AE 42 | TPU | 280 | 300 | 10,2 | 18 | 6.407,23 |

# Raschiatore

TPU 90

AE 47

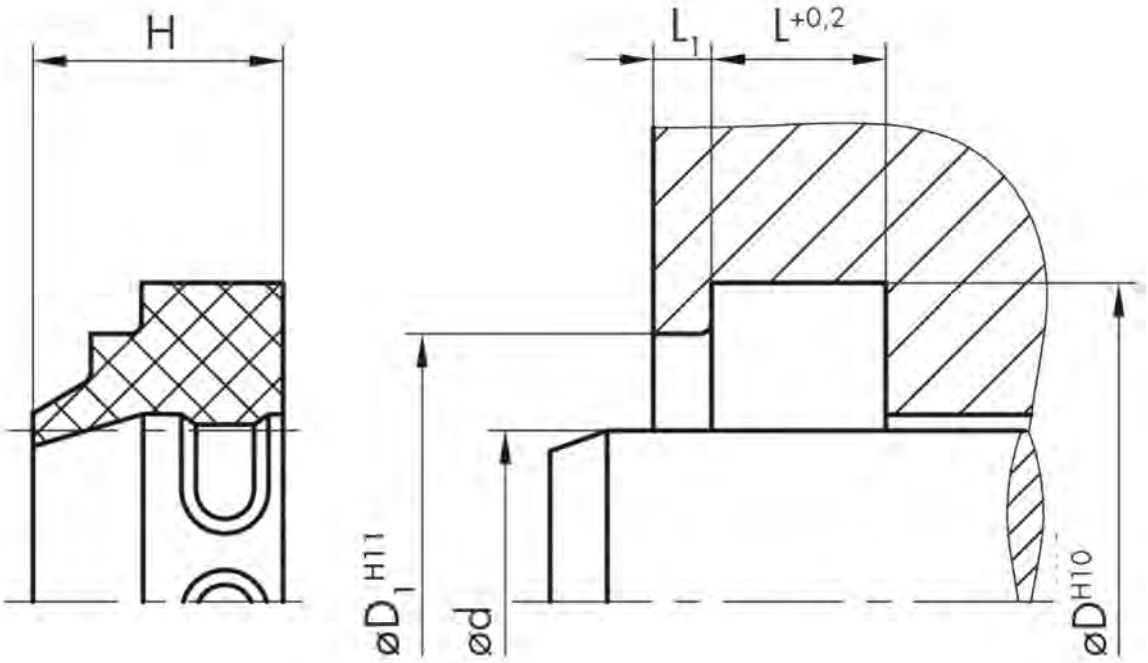
H
L1
L+0,2
øD1 H11
ød
øDH10

| CODICE | TIPO | MAT | d mm | D mm | L mm | H mm | LISTINO 5-2016 X 100 € |
|---|---|---|---|---|---|---|---|
| 194056 | AE 47 | TPU | 10 | 18 | 4 | 7 | 132,89 |
| 189310 | AE 47 | TPU | 18 | 26 | 4 | 7 | 132,89 |
| 188767 | AE 47 | TPU | 20 | 28 | 4 | 7 | 132,89 |
| 190504 | AE 47 | TPU | 22 | 30 | 4 | 7 | 148,52 |
| 188438 | AE 47 | TPU | 25 | 33 | 4 | 7 | 148,52 |
| 189013 | AE 47 | TPU | 28 | 36 | 4 | 7 | 148,52 |
| 188428 | AE 47 | TPU | 30 | 38 | 4 | 7 | 164,16 |
| 188184 | AE 47 | TPU | 32 | 40 | 4 | 7 | 164,16 |
| 188185 | AE 47 | TPU | 35 | 43 | 4 | 7 | 164,16 |
| 189394 | AE 47 | TPU | 36 | 44 | 4 | 7 | 164,16 |
| 189308 | AE 47 | TPU | 40 | 48 | 4 | 7 | 192,82 |
| 188023 | AE 47 | TPU | 45 | 53 | 4 | 7 | 192,82 |
| 188183 | AE 47 | TPU | 50 | 58 | 4 | 7 | 192,82 |
| 188313 | AE 47 | TPU | 55 | 63 | 4 | 7 | 221,48 |
| 189309 | AE 47 | TPU | 56 | 64 | 4 | 7 | 252,75 |
| 188429 | AE 47 | TPU | 60 | 68 | 4 | 7 | 252,75 |
| 189311 | AE 47 | TPU | 63 | 71 | 4 | 7 | 252,75 |
| 188135 | AE 47 | TPU | 65 | 73 | 4 | 7 | 252,75 |
| 188430 | AE 47 | TPU | 70 | 78 | 4 | 7 | 252,75 |
| 189862 | AE 47 | TPU | 75 | 83 | 4 | 7 | 252,75 |
| 188221 | AE 47 | TPU | 80 | 88 | 4 | 7 | 281,41 |
| 188431 | AE 47 | TPU | 85 | 93 | 4 | 7 | 312,68 |
| 189861 | AE 47 | TPU | 100 | 108 | 4 | 7 | 325,71 |
| 190505 | AE 47 | TPU | 110 | 122 | 5,5 | 10 | 370,01 |
| 196989 | AE 47 | TPU | 150 | 162 | 5,5 | 10 | 682,69 |
| 188261 | AE 47 | TPU | 160 | 172 | 5,5 | 10 | 990,21 |
| 188768 | AE 47 | TPU | 180 | 192 | 5,5 | 10 | 1.334,10 |

# Raschiatore

TPU 95

AD 48

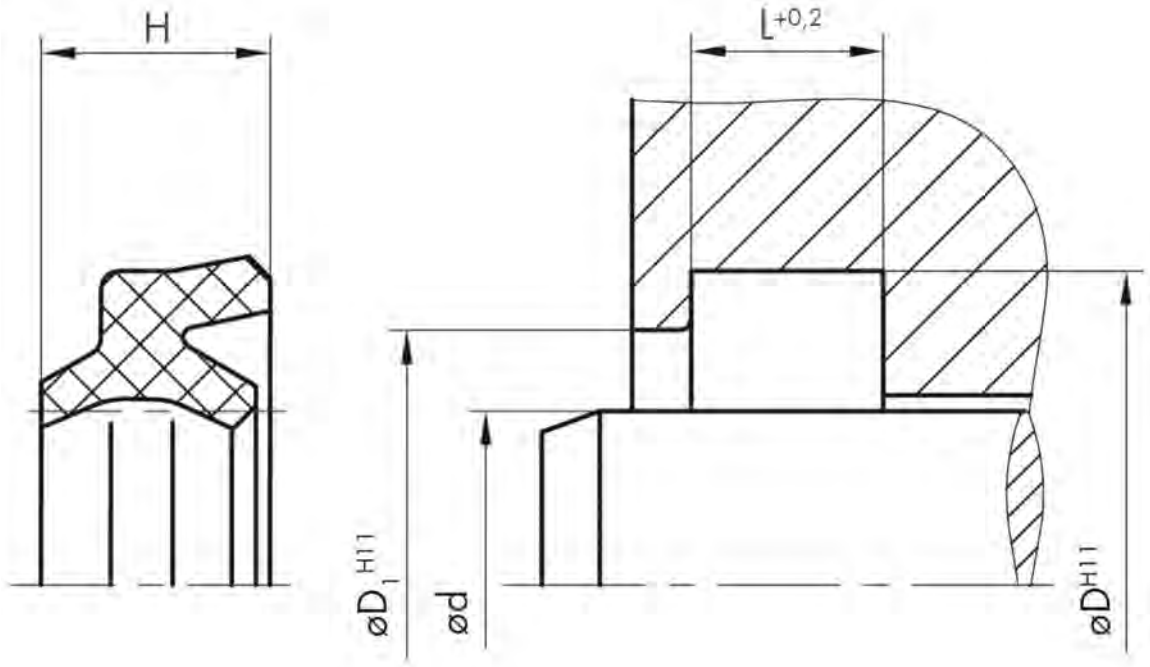
H
L+0,2
øD1 H11
ød
øD H11

| CODICE | TIPO | MAT | d mm | D mm | L mm | H mm | LISTINO 5-2016 X 100 € |
|---|---|---|---|---|---|---|---|
| 173675 | AD 48 | TPU | 10 | 16,6 | 3,8 | 4,8 | 221,55 |
| 72880 | AD 48 | TPU | 12 | 18,6 | 3,8 | 4,8 | 221,55 |
| 84060 | AD 48 | TPU | 14 | 20,6 | 3,8 | 4,8 | 232,97 |
| 84114 | AD 48 | TPU | 18 | 24,6 | 3,8 | 4,8 | 244,37 |
| 148580 | AD 48 | TPU | 20 | 26 | 4 | 4,8 | 258,09 |
| 87331 | AD 48 | TPU | 20 | 28,6 | 5,3 | 6,8 | 258,09 |
| 88972 | AD 48 | TPU | 22 | 28,6 | 3,8 | 4,8 | 258,09 |
| 173669 | AD 48 | TPU | 22 | 30,6 | 5,3 | 6,8 | 269,52 |
| 88973 | AD 48 | TPU | 25 | 31,6 | 3,8 | 4,8 | 269,52 |
| 173670 | AD 48 | TPU | 25 | 33,6 | 5,3 | 6,8 | 283,21 |
| 88974 | AD 48 | TPU | 28 | 36 | 5 | 5,8 | 283,21 |
| 87361 | AD 48 | TPU | 28 | 36,6 | 5,3 | 6,8 | 283,21 |
| 88975 | AD 48 | TPU | 30 | 38 | 5 | 5,8 | 294,63 |
| 173666 | AD 48 | TPU | 30 | 38,6 | 5,3 | 6,8 | 294,63 |
| 88976 | AD 48 | TPU | 32 | 40 | 5 | 5,8 | 319,75 |
| 87372 | AD 48 | TPU | 32 | 40,6 | 5,3 | 6,8 | 319,75 |
| 81547 | AD 48 | TPU | 35 | 43,6 | 5,3 | 6,8 | 342,59 |
| 88977 | AD 48 | TPU | 36 | 44 | 5 | 5,8 | 342,59 |
| 90166 | AD 48 | TPU | 36 | 44,6 | 5,3 | 6,8 | 404,26 |
| 88978 | AD 48 | TPU | 40 | 48 | 5 | 5,8 | 404,26 |
| 87374 | AD 48 | TPU | 40 | 48,6 | 5,3 | 6,8 | 404,26 |
| 88979 | AD 48 | TPU | 45 | 53 | 5 | 5,8 | 404,26 |
| 87380 | AD 48 | TPU | 45 | 53,6 | 5,3 | 6,8 | 404,26 |
| 90165 | AD 48 | TPU | 45 | 55,6 | 5,3 | 6,8 | 404,26 |
| 173676 | AD 48 | TPU | 50 | 58 | 5 | 5,8 | 417,97 |
| 173668 | AD 48 | TPU | 50 | 58,6 | 5,3 | 6,8 | 417,97 |
| 90167 | AD 48 | TPU | 50 | 60,6 | 5,3 | 6,8 | 454,51 |
| 173665 | AD 48 | TPU | 55 | 63,6 | 5,3 | 6,8 | 454,51 |
| 90168 | AD 48 | TPU | 55 | 65,6 | 5,3 | 6,8 | 454,51 |
| 173671 | AD 48 | TPU | 56 | 64,6 | 5,3 | 6,8 | 454,51 |
| 88980 | AD 48 | TPU | 56 | 66 | 6 | 6,8 | 454,51 |
| 87382 | AD 48 | TPU | 60 | 68,6 | 5,3 | 6,8 | 454,51 |
| 90169 | AD 48 | TPU | 60 | 70,6 | 5,3 | 6,8 | 516,18 |
| 173672 | AD 48 | TPU | 63 | 71,6 | 5,3 | 6,8 | 516,18 |
| 173677 | AD 48 | TPU | 63 | 73,6 | 5,3 | 6,8 | 516,18 |
| 173673 | AD 48 | TPU | 65 | 73,6 | 5,3 | 6,8 | 516,18 |
| 90171 | AD 48 | TPU | 70 | 80,6 | 5,3 | 6,8 | 516,18 |
| 173993 | AD 48 | TPU | 75 | 83 | 5 | 0 | 516,18 |
| 173678 | AD 48 | TPU | 75 | 85,6 | 5,3 | 7 | 516,19 |
| 90172 | AD 48 | TPU | 75 | 87,2 | 7,1 | 9 | 516,18 |
| 88981 | AD 48 | TPU | 80 | 90 | 6 | 6,8 | 516,18 |
| 90173 | AD 48 | TPU | 80 | 92,2 | 7,1 | 9 | 516,18 |
| 87391 | AD 48 | TPU | 85 | 97,2 | 7,1 | 10 | 552,71 |
| 88982 | AD 48 | TPU | 90 | 100 | 6 | 6,8 | 552,71 |
| 87392 | AD 48 | TPU | 90 | 102,2 | 7,1 | 9 | 564,14 |
| 90174 | AD 48 | TPU | 95 | 107,2 | 7,1 | 9 | 637,22 |

| CODICE | TIPO | MAT | d mm | D mm | L mm | H mm | LISTINO 5-2016 X 100 € |
|---|---|---|---|---|---|---|---|
| 130329 | AD 48 | TPU | 100 | 110,2 | 6,3 | 8 | 637,22 |
| 173667 | AD 48 | TPU | 100 | 112,2 | 7,1 | 9 | 637,22 |
| 173674 | AD 48 | TPU | 110 | 122,2 | 7,1 | 10 | 633,27 |
| 88983 | AD 48 | TPU | 110 | 125 | 8,5 | 9,5 | 824,06 |
| 90175 | AD 48 | TPU | 115 | 127,2 | 7,1 | 9 | 906,46 |
| 90176 | AD 48 | TPU | 135 | 147,2 | 7,1 | 9 | 997,23 |
| 108489 | AD 48 | TPU | 140 | 155 | 7,5 | 9,5 | 1.096,80 |
| 90177 | AD 48 | TPU | 155 | 167,2 | 7,1 | 9,5 | 1.206,50 |
| 90178 | AD 48 | TPU | 160 | 172,2 | 7,1 | 9,5 | 1.327,14 |
| 90179 | AD 48 | TPU | 185 | 197,2 | 7,1 | 9,5 | 1.459,86 |

# Raschiatore

TPU 95/METAL

ADM 55

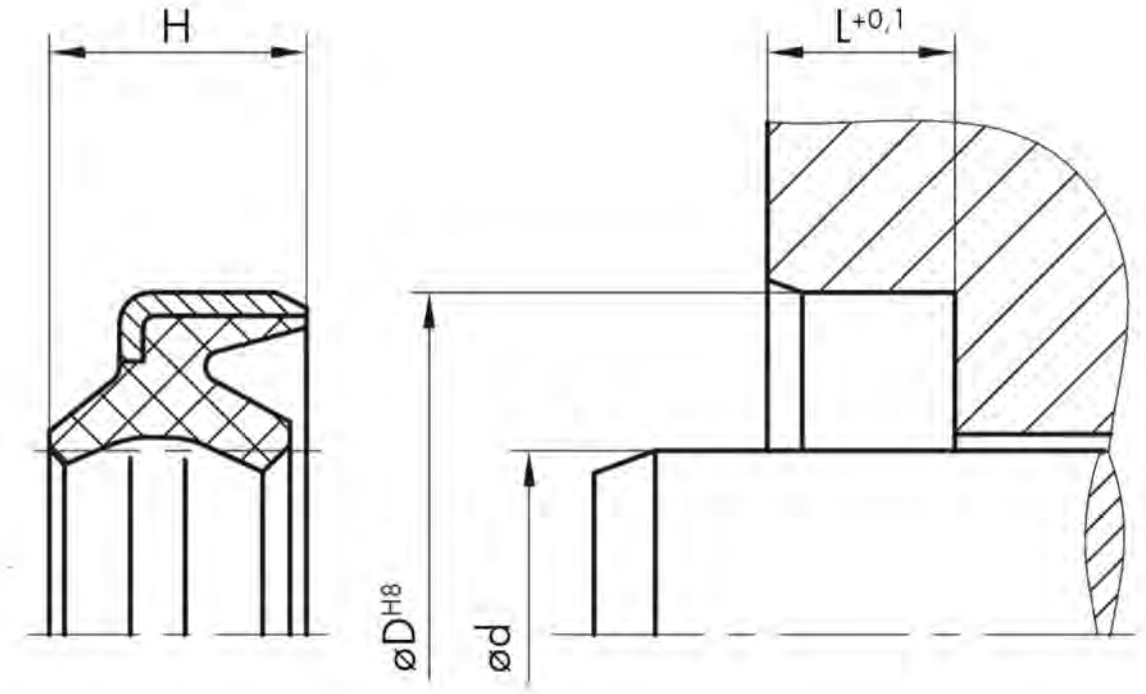
H
L+0,1
øD H8
ød

| CODICE | TIPO | MAT | d mm | D mm | L mm | H mm | LISTINO 5-2016 X 100 € |
|---|---|---|---|---|---|---|---|
| 143435 | ADM 55 | TPU | 19 | 26 | 5 | 7 | 356,26 |
| 133260 | ADM 55 | TPU | 19 | 27 | 4 | 6 | 356,26 |
| 117909 | ADM 55 | TPU | 20 | 32 | 6 | 9 | 384,73 |
| 117919 | ADM 55 | TPU | 25 | 37 | 6 | 9 | 384,73 |
| 117920 | ADM 55 | TPU | 30 | 42 | 6 | 9 | 384,73 |
| 117921 | ADM 55 | TPU | 32 | 44 | 7 | 10 | 384,73 |
| 135031 | ADM 55 | TPU | 32 | 52 | 8 | 11 | 470,22 |
| 117922 | ADM 55 | TPU | 34 | 46 | 7 | 10 | 470,22 |
| 117923 | ADM 55 | TPU | 35 | 47 | 7 | 10 | 470,22 |
| 135033 | ADM 55 | TPU | 36 | 48 | 7 | 10 | 470,23 |
| 117924 | ADM 55 | TPU | 38 | 50 | 7 | 10 | 470,23 |
| 117925 | ADM 55 | TPU | 40 | 52 | 7 | 10 | 470,22 |
| 117926 | ADM 55 | TPU | 45 | 57 | 7 | 10 | 470,22 |
| 117927 | ADM 55 | TPU | 50 | 62 | 7 | 10 | 546,17 |
| 135032 | ADM 55 | TPU | 50 | 72 | 8 | 11 | 653,09 |
| 117928 | ADM 55 | TPU | 55 | 69 | 8 | 11 | 653,09 |
| 117929 | ADM 55 | TPU | 60 | 74 | 8 | 11 | 653,09 |
| 117930 | ADM 55 | TPU | 65 | 79 | 8 | 11 | 683,87 |
| 155671 | ADM 55 | TPU | 70 | 83 | 8 | 11 | 724,30 |
| 117931 | ADM 55 | TPU | 70 | 84 | 8 | 11 | 724,30 |
| 117932 | ADM 55 | TPU | 75 | 89 | 8 | 11 | 752,29 |
| 117933 | ADM 55 | TPU | 80 | 94 | 8 | 12 | 819,25 |
| 117934 | ADM 55 | TPU | 85 | 99 | 8 | 11 | 938,05 |
| 117935 | ADM 55 | TPU | 90 | 104 | 8 | 11 | 938,04 |
| 117936 | ADM 55 | TPU | 95 | 109 | 8 | 11 | 938,05 |
| 117937 | ADM 55 | TPU | 100 | 114 | 8 | 11 | 961,30 |
| 117938 | ADM 55 | TPU | 105 | 121 | 9 | 12 | 1.382,12 |
| 117939 | ADM 55 | TPU | 110 | 126 | 9 | 12 | 1.523,49 |
| 117940 | ADM 55 | TPU | 115 | 131 | 9 | 12 | 1.609,56 |
| 117941 | ADM 55 | TPU | 120 | 136 | 9 | 12 | 1.709,63 |
| 117942 | ADM 55 | TPU | 130 | 146 | 9 | 12 | 1.866,24 |
| 117943 | ADM 55 | TPU | 140 | 160 | 10 | 14 | 2.123,02 |

# Raschiatore

TPU 95/METAL

AM 44

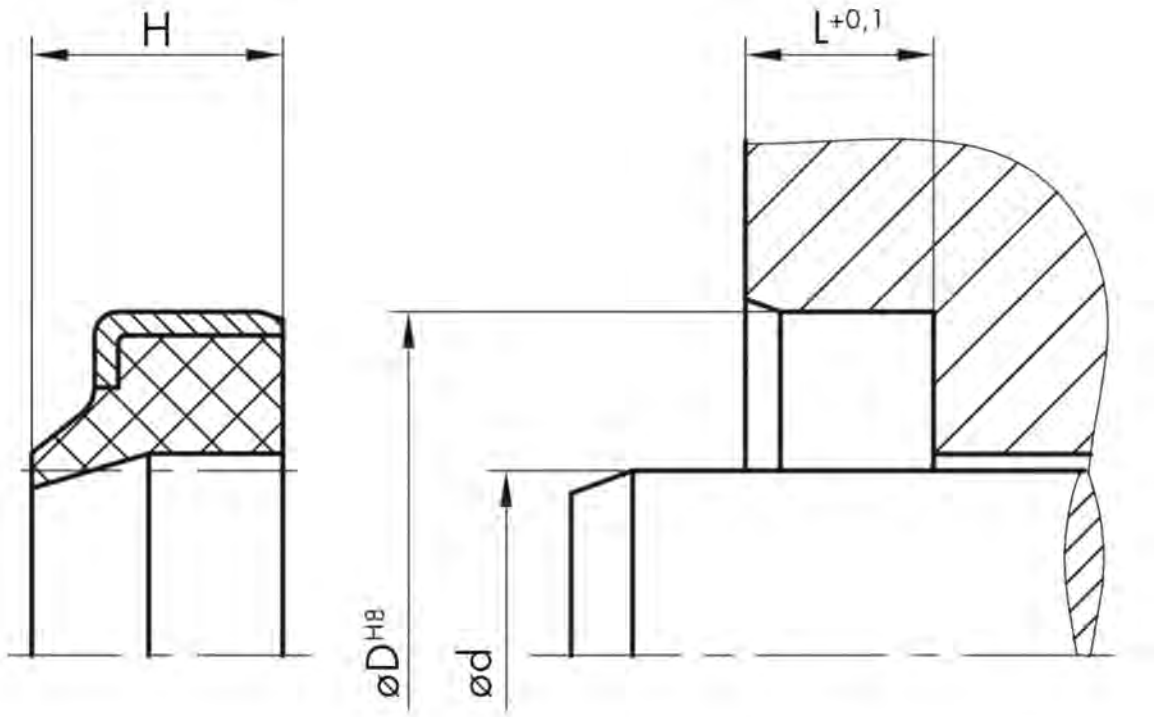
H
L+0,1
øD H8
ød

| CODICE | TIPO | MAT | d mm | D mm | L mm | H mm | LISTINO 5-2016 X 100 € |
|---|---|---|---|---|---|---|---|
| 62249 | AM 44 | TPU | 8 | 14 | 3,5 | 5 | 256,58 |
| 123028 | AM 44 | TPU | 9 | 19 | 5 | 7 | 256,58 |
| 171211 | AM 44 | TPU | 10 | 16 | 3,5 | 5 | 256,58 |
| 20988 | AM 44 | TPU | 10 | 20 | 5 | 8 | 256,58 |
| 171260 | AM 44 | TPU | 12 | 18 | 3,5 | 5 | 256,58 |
| 20989 | AM 44 | TPU | 12 | 20 | 4 | 6 | 256,58 |
| 20990 | AM 44 | TPU | 12 | 22 | 5 | 8 | 256,58 |
| 62253 | AM 44 | TPU | 14 | 20 | 3,5 | 5 | 256,58 |
| 123029 | AM 44 | TPU | 14 | 24 | 5 | 7 | 256,58 |
| 62255 | AM 44 | TPU | 15 | 21 | 3,5 | 5 | 293,08 |
| 16551 | AM 44 | TPU | 15 | 25 | 5 | 8 | 293,08 |
| 16552 | AM 44 | TPU | 16 | 22 | 3 | 4 | 293,08 |
| 62256 | AM 44 | TPU | 16 | 22 | 3,5 | 5 | 293,08 |
| 16553 | AM 44 | TPU | 16 | 26 | 5 | 8 | 293,08 |
| 118395 | AM 44 | TPU | 17 | 24 | 3,5 | 5 | 293,08 |
| 124085 | AM 44 | TPU | 18 | 28 | 5 | 7 | 293,08 |
| 62257 | AM 44 | TPU | 18 | 28 | 5 | 8 | 293,08 |
| 16554 | AM 44 | TPU | 18 | 28 | 7 | 10 | 293,08 |
| 123030 | AM 44 | TPU | 18 | 30 | 6 | 9 | 293,08 |
| 89982 | AM 44 | TPU | 20 | 28 | 3,5 | 5 | 359,42 |
| 16555 | AM 44 | TPU | 20 | 30 | 4 | 6 | 359,42 |
| 62258 | AM 44 | TPU | 20 | 30 | 5 | 8 | 359,42 |
| 20723 | AM 44 | TPU | 20 | 30 | 7 | 10 | 359,42 |
| 123031 | AM 44 | TPU | 20 | 32 | 6 | 9 | 359,42 |
| 171212 | AM 44 | TPU | 22 | 28 | 5 | 8 | 359,42 |
| 62260 | AM 44 | TPU | 22 | 32 | 5 | 8 | 359,42 |
| 16556 | AM 44 | TPU | 22 | 32 | 7 | 10 | 359,42 |
| 62261 | AM 44 | TPU | 25 | 32 | 5 | 8 | 359,42 |
| 16581 | AM 44 | TPU | 25 | 35 | 5 | 8 | 381,56 |
| 16557 | AM 44 | TPU | 25 | 35 | 7 | 10 | 381,56 |
| 123032 | AM 44 | TPU | 25 | 37 | 6 | 9 | 381,56 |
| 62262 | AM 44 | TPU | 28 | 38 | 5 | 8 | 381,56 |
| 62263 | AM 44 | TPU | 28 | 38 | 7 | 10 | 381,56 |
| 123034 | AM 44 | TPU | 28 | 40 | 6 | 9 | 381,56 |
| 20991 | AM 44 | TPU | 28 | 40 | 7 | 10 | 381,56 |
| 16558 | AM 44 | TPU | 30 | 40 | 5 | 8 | 381,56 |
| 20992 | AM 44 | TPU | 30 | 40 | 7 | 10 | 381,56 |
| 123035 | AM 44 | TPU | 30 | 42 | 6 | 9 | 381,56 |
| 16559 | AM 44 | TPU | 30 | 45 | 5 | 8 | 381,56 |
| 62264 | AM 44 | TPU | 32 | 42 | 5 | 8 | 458,97 |
| 62265 | AM 44 | TPU | 32 | 42 | 7 | 10 | 458,97 |
| 123036 | AM 44 | TPU | 32 | 44 | 7 | 10 | 458,97 |
| 20993 | AM 44 | TPU | 32 | 45 | 4 | 6 | 458,97 |
| 16560 | AM 44 | TPU | 32 | 45 | 7 | 10 | 458,97 |
| 171213 | AM 44 | TPU | 33 | 43 | 7 | 10 | 458,97 |
| 16561 | AM 44 | TPU | 35 | 45 | 7 | 10 | 458,97 |

| CODICE | TIPO | MAT | d mm | D mm | L mm | H mm | LISTINO 5-2016 X 100 € |
|---|---|---|---|---|---|---|---|
| 123037 | AM 44 | TPU | 35 | 47 | 7 | 10 | 458,96 |
| 20994 | AM 44 | TPU | 36 | 45 | 7 | 10 | 458,97 |
| 171214 | AM 44 | TPU | 36 | 46 | 5 | 7 | 458,97 |
| 143975 | AM 44 | TPU | 36 | 46 | 7 | 10 | 458,96 |
| 75211 | AM 44 | TPU | 36 | 50 | 7 | 10 | 458,97 |
| 62269 | AM 44 | TPU | 38 | 48 | 7 | 10 | 458,97 |
| 16562 | AM 44 | TPU | 40 | 50 | 5 | 8 | 458,97 |
| 16563 | AM 44 | TPU | 40 | 50 | 7 | 10 | 458,97 |
| 117599 | AM 44 | TPU | 40 | 52 | 7 | 10 | 486,62 |
| 46874 | AM 44 | TPU | 40 | 60 | 7 | 10 | 486,62 |
| 171216 | AM 44 | TPU | 42 | 52 | 5 | 8 | 486,62 |
| 16564 | AM 44 | TPU | 42 | 52 | 7 | 10 | 486,62 |
| 171217 | AM 44 | TPU | 45 | 55 | 5 | 8 | 486,62 |
| 20995 | AM 44 | TPU | 45 | 55 | 7 | 10 | 486,62 |
| 123039 | AM 44 | TPU | 45 | 57 | 7 | 10 | 486,62 |
| 16565 | AM 44 | TPU | 45 | 60 | 7 | 10 | 486,62 |
| 35310 | AM 44 | TPU | 48 | 60 | 7 | 10 | 486,62 |
| 174362 | AM 44 | TPU | 48 | 62 | 7 | 10 | 486,62 |
| 21146 | AM 44 | TPU | 50 | 56 | 5 | 8 | 486,62 |
| 62272 | AM 44 | TPU | 50 | 60 | 5 | 8 | 486,62 |
| 16566 | AM 44 | TPU | 50 | 60 | 7 | 10 | 486,62 |
| 123041 | AM 44 | TPU | 50 | 62 | 7 | 10 | 486,62 |
| 21133 | AM 44 | TPU | 52 | 62 | 7 | 10 | 486,62 |
| 123042 | AM 44 | TPU | 53 | 67 | 8 | 11 | 486,62 |
| 16567 | AM 44 | TPU | 55 | 63 | 7 | 10 | 486,62 |
| 62273 | AM 44 | TPU | 55 | 65 | 5 | 8 | 486,62 |
| 20996 | AM 44 | TPU | 55 | 65 | 7 | 10 | 486,62 |
| 123043 | AM 44 | TPU | 55 | 69 | 8 | 11 | 486,62 |
| 171218 | AM 44 | TPU | 56 | 66 | 5 | 8 | 486,62 |
| 21129 | AM 44 | TPU | 56 | 66 | 7 | 10 | 486,62 |
| 123044 | AM 44 | TPU | 56 | 70 | 8 | 11 | 617,12 |
| 171219 | AM 44 | TPU | 60 | 70 | 5 | 8 | 617,12 |
| 20997 | AM 44 | TPU | 60 | 70 | 7 | 10 | 617,12 |
| 37431 | AM 44 | TPU | 60 | 74 | 5 | 8 | 617,12 |
| 123045 | AM 44 | TPU | 60 | 74 | 8 | 11 | 617,12 |
| 62276 | AM 44 | TPU | 63 | 73 | 5 | 8 | 617,12 |
| 16568 | AM 44 | TPU | 63 | 75 | 7 | 10 | 652,50 |
| 123046 | AM 44 | TPU | 63 | 77 | 8 | 11 | 652,50 |
| 123047 | AM 44 | TPU | 64 | 78 | 8 | 11 | 652,50 |
| 171220 | AM 44 | TPU | 65 | 75 | 5 | 8 | 652,50 |
| 20998 | AM 44 | TPU | 65 | 75 | 7 | 10 | 652,50 |
| 123048 | AM 44 | TPU | 65 | 79 | 8 | 11 | 652,50 |
| 123049 | AM 44 | TPU | 67 | 81 | 8 | 11 | 676,83 |
| 171221 | AM 44 | TPU | 70 | 80 | 5 | 8 | 676,83 |
| 20999 | AM 44 | TPU | 70 | 80 | 7 | 10 | 676,83 |
| 123050 | AM 44 | TPU | 70 | 84 | 8 | 11 | 676,83 |

| CODICE | TIPO | MAT | d mm | D mm | L mm | H mm | LISTINO 5-2016 X 100 € |
|---|---|---|---|---|---|---|---|
| 171222 | AM 44 | TPU | 75 | 83 | 7 | 10 | 712,22 |
| 21000 | AM 44 | TPU | 75 | 85 | 7 | 10 | 712,22 |
| 123052 | AM 44 | TPU | 75 | 89 | 8 | 11 | 712,22 |
| 171223 | AM 44 | TPU | 80 | 88 | 7 | 10 | 712,22 |
| 16569 | AM 44 | TPU | 80 | 90 | 7 | 10 | 736,55 |
| 123053 | AM 44 | TPU | 80 | 94 | 8 | 11 | 736,55 |
| 24264 | AM 44 | TPU | 82 | 92 | 7 | 10 | 771,96 |
| 16570 | AM 44 | TPU | 85 | 95 | 7 | 10 | 771,96 |
| 123054 | AM 44 | TPU | 85 | 99 | 8 | 11 | 771,96 |
| 16571 | AM 44 | TPU | 90 | 100 | 7 | 10 | 771,96 |
| 123055 | AM 44 | TPU | 90 | 104 | 8 | 11 | 862,63 |
| 57273 | AM 44 | TPU | 90 | 110 | 10 | 14 | 862,63 |
| 123056 | AM 44 | TPU | 92 | 106 | 8 | 11 | 862,63 |
| 21130 | AM 44 | TPU | 95 | 105 | 7 | 10 | 862,63 |
| 16572 | AM 44 | TPU | 100 | 110 | 7 | 10 | 951,11 |
| 123057 | AM 44 | TPU | 100 | 114 | 8 | 11 | 951,11 |
| 16573 | AM 44 | TPU | 100 | 115 | 8 | 11 | 951,11 |
| 62280 | AM 44 | TPU | 105 | 115 | 7 | 10 | 951,11 |
| 68559 | AM 44 | TPU | 105 | 121 | 9 | 12 | 1.078,29 |
| 123058 | AM 44 | TPU | 106 | 122 | 9 | 12 | 1.078,29 |
| 21001 | AM 44 | TPU | 110 | 120 | 7 | 10 | 1.078,29 |
| 123059 | AM 44 | TPU | 110 | 126 | 9 | 12 | 1.078,29 |
| 35884 | AM 44 | TPU | 115 | 125 | 7 | 10 | 1.078,29 |
| 16574 | AM 44 | TPU | 120 | 130 | 7 | 10 | 1.187,78 |
| 123062 | AM 44 | TPU | 120 | 136 | 9 | 12 | 1.187,78 |
| 62281 | AM 44 | TPU | 125 | 140 | 9 | 12 | 1.187,78 |
| 123063 | AM 44 | TPU | 125 | 141 | 9 | 12 | 1.244,19 |
| 16575 | AM 44 | TPU | 130 | 145 | 9 | 12 | 1.244,19 |
| 123065 | AM 44 | TPU | 130 | 146 | 9 | 12 | 1.244,19 |
| 123066 | AM 44 | TPU | 132 | 148 | 9 | 12 | 1.244,19 |
| 21350 | AM 44 | TPU | 135 | 150 | 9 | 12 | 1.244,19 |
| 123067 | AM 44 | TPU | 135 | 155 | 10 | 14 | 1.503,92 |
| 16576 | AM 44 | TPU | 140 | 155 | 9 | 12 | 1.503,92 |
| 123068 | AM 44 | TPU | 140 | 160 | 10 | 16 | 1.635,62 |
| 16577 | AM 44 | TPU | 150 | 165 | 9 | 12 | 1.740,15 |
| 123070 | AM 44 | TPU | 150 | 170 | 10 | 14 | 1.849,17 |
| 16578 | AM 44 | TPU | 160 | 175 | 9 | 12 | 1.870,58 |
| 123071 | AM 44 | TPU | 160 | 180 | 10 | 14 | 1.902,16 |
| 123073 | AM 44 | TPU | 170 | 190 | 10 | 14 | 2.744,24 |
| 36615 | AM 44 | TPU | 180 | 195 | 10 | 14 | 2.898,74 |
| 123075 | AM 44 | TPU | 180 | 205 | 12 | 17 | 4.316,30 |
| 123076 | AM 44 | TPU | 190 | 215 | 12 | 17 | 4.836,46 |
| 25957 | AM 44 | TPU | 200 | 220 | 12 | 16 | 4.836,46 |
| 123077 | AM 44 | TPU | 200 | 225 | 12 | 17 | 4.836,46 |
| 123078 | AM 44 | TPU | 210 | 235 | 12 | 17 | 5.215,66 |
| 123080 | AM 44 | TPU | 220 | 245 | 12 | 17 | 5.858,41 |

# Raschiatore

TPU 95/METAL

AM 54

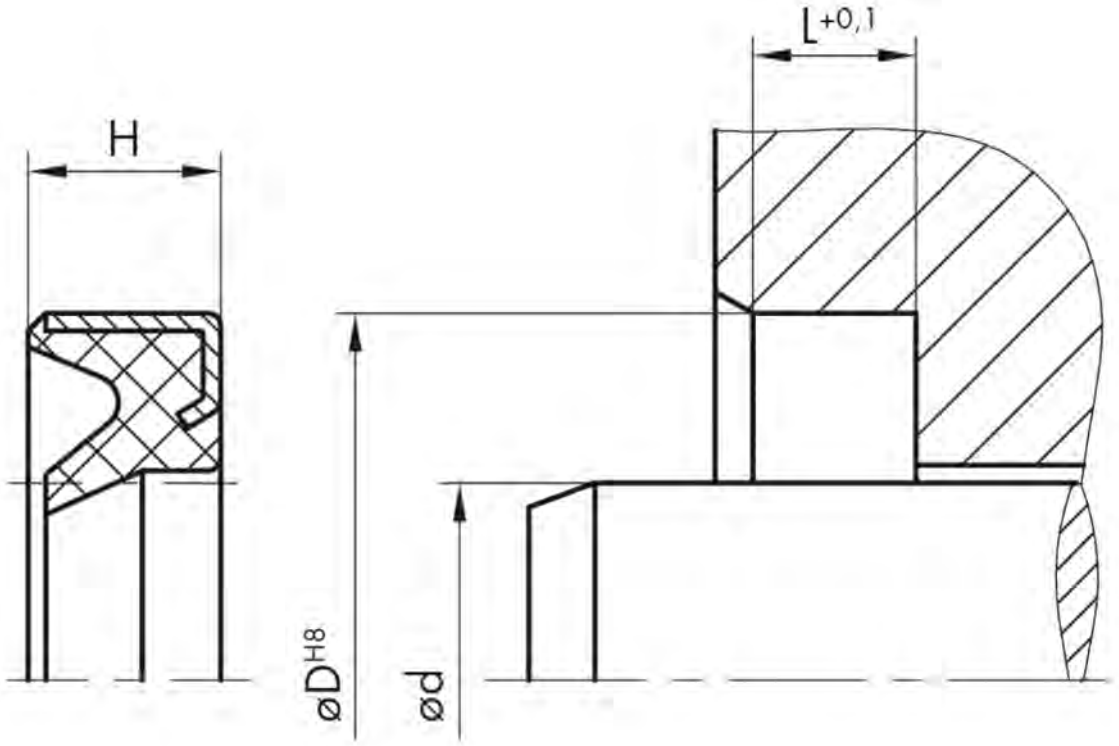
H
øD H8
L +0,1
ød

| CODICE | TIPO | MAT | d mm | D mm | L mm | H mm | LISTINO 5-2016 X 100 € |
|---|---|---|---|---|---|---|---|
| 127755 | AM 54 | TPU | 16 | 23 | 5 | 5 | 536,39 |
| 45261 | AM 54 | TPU | 25 | 38 | 7,5 | 7,5 | 536,39 |
| 45262 | AM 54 | TPU | 30 | 40 | 4 | 4 | 536,39 |
| 44133 | AM 54 | TPU | 30 | 43 | 7,5 | 7,5 | 536,39 |
| 21753 | AM 54 | TPU | 35 | 45 | 4 | 4 | 552,98 |
| 83972 | AM 54 | TPU | 35 | 50 | 7,5 | 7,5 | 552,98 |
| 45268 | AM 54 | TPU | 38 | 50 | 7,5 | 7,5 | 552,98 |
| 122990 | AM 54 | TPU | 38,1 | 50,8 | 6,35 | 6,35 | 552,98 |
| 158766 | AM 54 | TPU | 38,1 | 50,8 | 7,93 | 7,93 | 552,98 |
| 45269 | AM 54 | TPU | 40 | 50 | 4 | 4 | 552,98 |
| 108627 | AM 54 | TPU | 40 | 52 | 7 | 7 | 552,98 |
| 122987 | AM 54 | TPU | 41,27 | 53,97 | 6,35 | 6,35 | 552,98 |
| 122991 | AM 54 | TPU | 44,45 | 57,15 | 6,35 | 6,35 | 552,98 |
| 118013 | AM 54 | TPU | 45 | 55 | 3,2 | 3,2 | 552,98 |
| 45273 | AM 54 | TPU | 45 | 55 | 4 | 4 | 552,98 |
| 108631 | AM 54 | TPU | 45 | 57 | 7 | 7 | 580,62 |
| 45274 | AM 54 | TPU | 45 | 60 | 7,5 | 7,5 | 580,62 |
| 122988 | AM 54 | TPU | 47,62 | 60,32 | 6,35 | 6,35 | 580,62 |
| 28283 | AM 54 | TPU | 50 | 60 | 4 | 4 | 580,62 |
| 106814 | AM 54 | TPU | 50 | 60 | 5 | 5 | 580,62 |
| 46001 | AM 54 | TPU | 50 | 60 | 7 | 7 | 580,62 |
| 108633 | AM 54 | TPU | 50 | 62 | 7 | 7 | 580,62 |
| 28287 | AM 54 | TPU | 50 | 65 | 7,5 | 7,5 | 580,62 |
| 45316 | AM 54 | TPU | 50,8 | 63,5 | 7,93 | 7,93 | 608,27 |
| 68549 | AM 54 | TPU | 55 | 69 | 8 | 8 | 635,92 |
| 7841 | AM 54 | TPU | 55 | 70 | 7,5 | 7,5 | 635,92 |
| 108623 | AM 54 | TPU | 57,15 | 69,85 | 7,93 | 7,93 | 674,64 |
| 106813 | AM 54 | TPU | 60 | 70 | 5 | 5 | 674,64 |
| 68551 | AM 54 | TPU | 60 | 74 | 8 | 8 | 750,38 |
| 45279 | AM 54 | TPU | 60 | 75 | 7,5 | 7,5 | 750,38 |
| 28311 | AM 54 | TPU | 63 | 78 | 7,5 | 7,5 | 750,38 |
| 45325 | AM 54 | TPU | 63,5 | 76,2 | 7,93 | 7,93 | 750,38 |
| 45301 | AM 54 | TPU | 65 | 75 | 7 | 7 | 750,38 |
| 68550 | AM 54 | TPU | 65 | 79 | 8 | 8 | 750,38 |
| 45286 | AM 54 | TPU | 65 | 80 | 7,5 | 7,5 | 750,38 |
| 108629 | AM 54 | TPU | 70 | 80 | 7 | 7 | 778,36 |
| 28314 | AM 54 | TPU | 70 | 84 | 7,5 | 7,5 | 778,36 |
| 68555 | AM 54 | TPU | 70 | 84 | 8 | 8 | 778,36 |
| 41843 | AM 54 | TPU | 70 | 85 | 7,5 | 7,5 | 778,36 |
| 68554 | AM 54 | TPU | 75 | 89 | 8 | 8 | 819,06 |
| 89706 | AM 54 | TPU | 75 | 90 | 7,5 | 7,5 | 819,06 |
| 45332 | AM 54 | TPU | 76,2 | 88,9 | 7,93 | 7,93 | 900,46 |
| 108632 | AM 54 | TPU | 80 | 90 | 7 | 7 | 969,15 |
| 68556 | AM 54 | TPU | 80 | 94 | 8 | 8 | 969,15 |
| 7234 | AM 54 | TPU | 80 | 95 | 5 | 5 | 969,15 |
| 45289 | AM 54 | TPU | 80 | 95 | 7,5 | 7,5 | 969,15 |

| CODICE | TIPO | MAT | d mm | D mm | L mm | H mm | LISTINO 5-2016 X 100 € |
|---|---|---|---|---|---|---|---|
| 68552 | AM 54 | TPU | 85 | 99 | 8 | 8 | 997,13 |
| 45297 | AM 54 | TPU | 85 | 105 | 10 | 10 | 997,13 |
| 122986 | AM 54 | TPU | 88,9 | 101,6 | 9,52 | 9,52 | 1.025,11 |
| 108636 | AM 54 | TPU | 90 | 100 | 7 | 7 | 1.025,11 |
| 68558 | AM 54 | TPU | 90 | 104 | 8 | 8 | 1.025,11 |
| 45299 | AM 54 | TPU | 90 | 105 | 6 | 6 | 1.025,11 |
| 151640 | AM 54 | TPU | 90 | 106 | 8 | 8 | 1.050,65 |
| 73264 | AM 54 | TPU | 90 | 110 | 10 | 10 | 1.050,65 |
| 130163 | AM 54 | TPU | 95 | 110 | 8 | 8 | 1.050,65 |
| 122996 | AM 54 | TPU | 95,25 | 107,95 | 9,52 | 9,52 | 1.050,65 |
| 108638 | AM 54 | TPU | 100 | 114 | 8 | 8 | 1.093,78 |
| 28357 | AM 54 | TPU | 100 | 115 | 7,5 | 7,5 | 1.093,78 |
| 160514 | AM 54 | TPU | 100 | 115 | 8 | 8 | 1.093,78 |
| 108639 | AM 54 | TPU | 100 | 115 | 9 | 9 | 1.093,78 |
| 151641 | AM 54 | TPU | 100 | 116 | 8 | 8 | 1.147,20 |
| 73265 | AM 54 | TPU | 100 | 120 | 10 | 10 | 1.147,20 |
| 122997 | AM 54 | TPU | 101,6 | 114,3 | 9,52 | 9,52 | 1.147,20 |
| 130164 | AM 54 | TPU | 110 | 125 | 8 | 8 | 1.299,49 |
| 45310 | AM 54 | TPU | 110 | 125 | 9 | 9 | 1.299,49 |
| 151638 | AM 54 | TPU | 110 | 126 | 8 | 8 | 1.299,49 |
| 108640 | AM 54 | TPU | 110 | 126 | 9 | 9 | 1.299,49 |
| 93001 | AM 54 | TPU | 110 | 130 | 10 | 10 | 1.299,49 |
| 28374 | AM 54 | TPU | 115 | 130 | 8 | 8 | 1.299,49 |
| 150047 | AM 54 | TPU | 120 | 135 | 8 | 8 | 1.338,19 |
| 108635 | AM 54 | TPU | 120 | 136 | 9 | 9 | 1.338,19 |
| 108641 | AM 54 | TPU | 120 | 140 | 8 | 8 | 1.338,19 |
| 45312 | AM 54 | TPU | 120 | 140 | 10 | 10 | 1.338,19 |
| 124881 | AM 54 | TPU | 120 | 150 | 12 | 12 | 1.382,43 |
| 28377 | AM 54 | TPU | 130 | 145 | 7,5 | 7,5 | 1.382,43 |
| 28348 | AM 54 | TPU | 130 | 146 | 9 | 9 | 1.382,43 |
| 158307 | AM 54 | TPU | 130 | 150 | 8 | 8 | 1.382,43 |
| 161086 | AM 54 | TPU | 130 | 150 | 10 | 10 | 1.382,43 |
| 155648 | AM 54 | TPU | 130 | 154 | 8 | 8 | 1.437,73 |
| 161087 | AM 54 | TPU | 130 | 160 | 12 | 12 | 1.437,73 |
| 115449 | AM 54 | TPU | 140 | 160 | 10 | 10 | 1.437,73 |
| 161061 | AM 54 | TPU | 180 | 200 | 10 | 10 | 3.122,85 |

## 1.CONDIZIONI GENERALI DI VENDITA

Le presenti condizioni sono valide per tutti gli ordini.
Con l'accettazione della nostra fornitura il cliente le riconosce come uniche condizioni valide. Pattuizioni diverse dalle presenti condizioni sono valide soltanto se le abbiamo espressamente accettate. Fin d'ora dichiariamo di non accettare le condizioni generali del nostro cliente.

## 2. PROPOSTA E CONCLUSIONE DEL CONTRATTO

Le presenti condizioni generali di vendita regolamentano sia la vendita continuativa (fornitura) e sia l'eventuale richiesta isolata di materiale.
Con l'accettazione della nostra fornitura il cliente le riconosce come uniche condizioni valide.
I singoli contratti di vendita (ordine e accettazione) e i contratti di fornitura, nonché le relative modifiche ed integrazioni, sono validi solo se effettuati in forma scritta, anche per via telematica e previa accettazione del venditore.
Gli ordini dei clienti possono essere formulati sulla base dei nostri cataloghi e listini utilizzando le codificazioni ivi contenute.
Eventuali nostre offerte possono essere revocate salvo i casi in cui sia stato fissato un termine per l'accettazione. Sono considerati validi solo gli ordini da noi confermati per iscritto. Si considerano come conferme scritte anche le fatture o i tabulati di computer da noi dichiarati vincolanti.
Accordi telefonici o verbali o patti conclusi con i nostri rappresentanti acquistano validità solo se sono stati da noi approvati per iscritto.
Non saranno accettati ordini inferiori al minimo stabilito per la singola linea di prodotto così come indicato nel catalogo, fatti salvi specifici accordi con il cliente confermati per iscritto.
L'ordine complessivo non potrà essere inferiore a € 100. In caso contrario sarà nostra facoltà aumentare le quantità, in modo da raggiungere il valore di fatturazione minimo di € 100.

## 3. PREZZI

I nostri prezzi sono in euro, franco nostro stabilimento, salvo diverso accordo scritto, I.V.A. esclusa e sono basati sui listini in corso al momento dell'offerta e/o dell'ordine.
Per le consegne differite nel tempo, ed in presenza di modifiche ai nostri listini, dovuti ad aumenti nei costi di produzione e/o a variazioni nelle parità monetarie, ci riserviamo di fatturare secondo i prezzi dei nostri listini in vigore al momento della consegna, salvo espressa pattuizione contraria.

## 4. RESA E TERMINI DI CONSEGNA

### 4.1
I termini di consegna decorrono dalla data in cui l'accettazione scritta del Venditore perviene al Compratore.
È esclusa la facoltà del Compratore di domandare somme a titolo di risarcimento di danni derivanti da ritardi nella consegna dei Prodotti Contrattuali.
Il Venditore non è responsabile per ritardi nelle consegne dovuti a cause di forza maggiore, quali, a titolo puramente esemplificativo, difficoltà nell'approvvigionamento di materiali, attrezzature o energia, interruzioni di lavoro, agitazioni sindacali, difficoltà nei trasporti, calamità naturali, provvedimenti di pubblica autorità.

### 4.2
La merce viaggia a rischio e pericolo e a spese del cliente, indipendentemente dal luogo di destinazione e dall'ordinante la spedizione, salvo diverso accordo scritto. Qualora il cliente richieda una forma particolare di trasporto egli dovrà sostenere anche i maggiori costi che ne derivano.

### 4.3
Salvo espresso patto contrario i nostri termini di consegna non sono vincolanti.
Per gli ordini con consegne ripartite, i termini di consegna devono essere in ogni caso pattuiti per iscritto.
La Dichtomatik S.A.S. si riserva il diritto di effettuare consegne parziali o in conto delle forniture. In tal caso ogni consegna è considerata operazione a sé stante.
Nel caso di ordini con consegne ripartite ci riserviamo il diritto di procurarci il materiale per l'intero ordine e di produrre tutta la quantità di merce ordinata, fin dall'inizio. Non potranno quindi più essere prese in considerazione eventuali richieste di modifiche da parte del cliente che ci pervengano dopo l'accettazione dell'ordine da parte del Venditore. Rimangono salvi patti contrari scritti.

### 4.4
Nel caso di apertura della procedura di fallimento o di concordato, di qualsiasi altro mutamento delle condizioni patrimoniali, di difficoltà di pagamento o di mora dell'acquirente ci riserviamo il diritto di sospendere immediatamente le forniture e di chiedere la risoluzione automatica del contratto, senza necessità di preavviso alcuno con riserva di pretendere in garanzia la restituzione della merce di cui conserviamo la proprietà ai sensi dell'art. 5 e con riserva di addebito delle spese già da noi sostenute e dei maggiori danni eventualmente subiti.
In questo caso i crediti ancora esistenti acquistano scadenza immediata.

### 4.5
Si considera tollerabile una differenza del 10% in più o in meno sulla quantità della merce ordinata. Nel caso di ordini di piccola entità, ci riserviamo di calcolare il prezzo in base a una quantità minima o di addebitare un forfait per i costi.

## 5. PAGAMENTI E GARANZIE DI CREDITO

### 5.1
Il pagamento del prezzo deve pervenire alla nostra sede entro i termini stabiliti nell'accettazione dell'ordine ovvero nel contratto di fornitura, con normali mezzi di pagamento, senza sconti o abbuoni.
Ci riserviamo di non accettare assegni, cambiali o altre forme di promesse di pagamento e in, caso di accettazione il pagamento si considera pro solvendo.
Nel caso di ritardato pagamento, il Compratore sarà tenuto, ferma restando la facoltà del Venditore di domandare la risoluzione del contratto ed il risarcimento del danno, a corrispondere gli interessi di mora pari al saggio d'interesse della Banca Centrale Europea pubblicato sulla G.U. italiana, ai sensi e per gli effetti dell'art. 5 del D.lgs.231/2002, maggiorato di sette punti percentuali, oltre al risarcimento dei costi sostenuti per il recupero delle somme non tempestivamente corrispostegli, salva la prova del maggior danno ai sensi dell'art. 6 del medesimo D.lgs.231/2002.
Nel caso in cui il Compratore non provveda al pagamento dei prodotti nei termini convenuti, il Venditore avrà facoltà di sospendere immediatamente l'esecuzione di ogni contratto di vendita concluso con il Compratore, sino a che quest'ultimo non abbia provveduto all'integrale pagamento di quanto dovuto.

### 5.2
La merce rimane di nostra proprietà fino al pagamento completo di tutti i debiti esistenti verso di noi o verso imprese a noi collegate.
Il Compratore prende atto del fatto che il Venditore potrà cedere gli eventuali crediti derivanti dalle singole vendite ed accetta preventivamente tale cessione per gli effetti di cui all'articolo 1264 del codice civile.
Il Compratore prende atto del fatto che il Venditore è autorizzato fin da ora a compensare eventuali debiti verso il Compratore, con tutti i crediti che spettano al Venditore.

## 6. APPARECCHIATURE E ATTREZZATURE

Apparecchiature ed attrezzature costruite da noi o da terzi/ rappresentate su incarico del cliente rimangono in ogni caso di nostra proprietà anche se i costi di fabbricazione sono in tutto o in parte a carico del cliente.

## 7. DIRITTI DI PROTEZIONE INDUSTRIALE

Rispondiamo delle violazioni dei diritti di protezione industriale soltanto se nell'ambito dell'utilizzo contrattuale della nostra merce vengono violati diritti validi nella Repubblica italiana e già registrati al momento della consegna. Se la merce consegnata è stata prodotta sulla base di disegni, modelli, campioni o altri documenti forniti dal cliente, egli garantisce che non siano violati diritti di terzi e ne assume la responsabilità.

Qualora i terzi sostengano che la merce viola un loro diritto, siamo autorizzati a sospendere le forniture senza particolari verifiche delle asserzioni dei terzi, con riserva di far valere i nostri diritti per risarcimento di eventuali danni. Il cliente è tenuto a informarci immediatamente qualora egli venga a conoscenza di rischi di violazione o di presunte violazioni.

## 8. GARANZIE E RESPONSABILITÀ

### 8.1
La Dichtomatik s.a.s. garantisce che il prodotto fornito è esente da difetti o vizi occulti e che è adatto all'impiego indicato sui nostri cataloghi. Il Compratore si obbliga a non utilizzare i prodotti acquistati per un uso diverso da quello cui sono destinati. Il cliente è tenuto a controllare che la nostra merce sia idonea all'uso che ne intende fare. Ogni responsabilità eventualmente derivante da una diversa utilizzazione, anche quando autorizzata dal Venditore, rimarrà ad esclusivo carico del Compratore.
L'inosservanza del divieto di cui al presente comma comporta l'immediata decadenza del Compratore dal diritto alla garanzia.

### 8.2
I dati da noi forniti riguardanti l'oggetto della consegna o della prestazione o l'uso della cosa (per es: misure, pesi, resistenze, valori d'uso) nonché le indicazioni contenute sui nostri cataloghi, sono solo descrizioni o definizioni aventi valore indicativo, ma non costituiscono caratteristiche promesse o pattuite. Non impegnano in alcun modo la nostra società ed è quindi esclusa qualsiasi nostra responsabilità. Le caratteristiche sono da considerarsi garantite soltanto se espressamente definite tali - dettagliatamente e per iscritto - e, in caso di acquisto in base ai campioni, se il campione omologato le possiede.

### 8.3
I numeri di disegno, i codici o altre indicazioni del cliente, relativi a particolari di nostra fornitura, riportati sulle conferme d'ordine o su altri documenti commerciali, hanno solo carattere informativo e sono da noi inseriti A RICHIESTA del cliente al solo fine di facilitare le ricerche ed i collegamenti informatici. Non significa che essi siano da noi conosciuti o disponibili presso la nostra società, né che i particolari da noi forniti siano stati collaudati e/o verificati e/o comunque riconosciuti idonei rispetto ai disegni o alle altre eventuali e diverse indicazioni fornite dal Cliente e pertanto non possono costituire riconoscimento di assunzione di responsabilità per qualsiasi motivo, responsabilità che rimane esclusivamente ed integralmente a carico del Cliente.

### 8.4
Nel caso in cui la merce venga prodotta e fornita sulla base di disegni, progetti, indicazioni tecniche, fornite dal cliente, la Dichtomatik S.A.S. non garantisce l'idoneità del prodotto all'uso per il quale la parte acquirente lo ha progettato e conseguentemente declina ogni e qualsiasi responsabilità relativamente ai danni che potessero derivare al cliente o a terzi; in tale ultima ipotesi la committente si impegna a manlevare ed a tenere indenne la Dichtomatik S.A.S. da ogni qualsivoglia pretesa risarcitoria.

### 8.5
Ferme restando le limitazioni di responsabilità contenute nelle presenti condizioni, la nostra responsabilità per danni di ogni tipo, in particolare la responsabilità derivante dalla violazione di doveri contrattuali secondari e da atto illecito, comprende solo i casi in cui noi, i nostri collaboratori o i nostri ausiliari abbiamo agito con dolo o colpa grave. La nostra responsabilità è comunque limitata al risarcimento del danno tipico prevedibile in base allo scopo del contratto, e in ogni caso non potrà essere superiore al valore della merce venduta.

### 8.6
Se non altrimenti espressamente concordato, si applicano i termini di garanzia e di prescrizione stabiliti dalla legge. È fatta salva la responsabilità per danni alle cose e alle persone secondo la legge sulla responsabilità del produttore.

### 8.7
Perché possano essere attivati i termini della garanzia da parte dei produttori degli articoli, il nostro cliente deve poter garantire la previa rintracciabilità del nostro prodotto da lui venduto fino al cliente finale. Qualora ciò non sia possibile, cessa ogni nostra responsabilità.

## 9. CONDIZIONI DI APPLICAZIONE DELLA GARANZIA

### 9.1
Al ricevimento della merce il cliente deve verificare la quantità, la qualità, i riferimenti ai codici e la conformità con l'ordine.
I reclami per vizi apparenti o per forniture incomplete debbono essere comunicati per iscritto entro otto giorni dal ricevimento della merce e in ogni caso prima che essa venga utilizzata per successivi cicli di lavorazione o rivenduta, descrivendo esattamente la natura dei vizi. I reclami a causa di vizi occulti debbono essere comunicati per iscritto entro otto giorni dalla loro scoperta, descrivendo esattamente la natura dei vizi.

### 9.2
Il Compratore decade dal diritto alla garanzia qualora:
- il prezzo non sia pagato nei termini convenuti;
- non siano osservate le istruzioni fornite nelle nostre documentazioni per l'uso, l'istallazione e la manutenzione dei Prodotti Contrattuali;
- i Prodotti Contrattuali siano modificati senza il consenso del Venditore o siano installati o riparati da soggetti non professionalmente qualificati ed abilitati.

### 9.3
In caso di presunta difettosità il cliente dovrà provvedere a segnalare immediatamente con il mezzo più rapido possibile, (fax, e-mail ecc.) il difetto rilevato direttamente alla Dichtomatik S.A.S., via delle Fabbriche 6, Genova. Ci assumiamo la responsabilità per vizi della merce da noi fornita secondo le seguenti modalità: a fronte di difetti non irrilevanti della cosa porremo rimedio, a nostra scelta, riparando o sostituendo i pezzi difettosi, oppure con un accredito. Il cliente ha diritto alla risoluzione del contratto o alla diminuzione del prezzo solo nel caso in cui la riparazione o la sostituzione non siano possibili o non abbiano avuto buon esito. Qualora le caratteristiche della merce fornita non corrispondano alle caratteristiche pattuite ed essenziali valgono le norme di legge. La nostra responsabilità è però limitata al risarcimento del danno che le caratteristiche promesse erano destinate a evitare, con esclusione dei danni indotti.
Sono esclusi altri più ampi risarcimenti salvo i casi in cui da parte nostra ci sia dolo o colpa grave.

### 9.4
La merce contestata dovrà essere tenuta a disposizione della Dichtomatik S.A.S. che provvederà a fornire tempestive istruzioni, ivi comprese le autorizzazioni all'eventuale restituzione del prodotto. Il cliente potrà restituire la merce contestata solo previa nostra autorizzazione scritta. I prodotti dovranno essere in perfetto stato di conservazione, nel loro imballo originale e non dovranno essere stati oggetto di montaggio o utilizzo.

### 9.5
Dovranno essere precisati gli eventuali danni arrecati a terzi.

## 10. PATTI CONTRARI

Pattuizioni diverse dalle presenti condizioni di vendita sono valide solo se sono state da noi confermate per iscritto. Le condizioni di vendita non modificate da altre pattuizioni rimangono valide.

## 11. ELABORAZIONE DATI

Le nostre offerte, conferme d'ordine e fatture vengono redatte per mezzo dell'elaborazione elettronica dei dati.

## 12. DIRITTO APPLICABILE E CONTROVERSIE

Il contratto è disciplinato esclusivamente dalla legge italiana.
Per qualsiasi controversia relativa all'interpretazione, esecuzione o risoluzione del contratto è competente il Tribunale di Genova.
Qualora il cliente abbia la propria residenza all'estero, siamo autorizzati ad adire qualsiasi Tribunale competente.

**Germania**
DICHTOMATIK GMBH
Albert-Schweitzer-Ring 1
D-22045 Hamburg
P.O. Box 70 04 80
D-22004 Hamburg
Phone +49/40/66 98 90
Fax +49/40/66 98 91 01
mail@dichtomatik.de
www.dichtomatik.de

**Olanda**
DICHTOMATIK B.V.
Benjamin Franklinstraat 6
NL-8013 NC Zwolle
Postbus 40 102
NL-8004 DC Zwolle
Phone 038/460 16 06
Fax 038/467 19 00
mail@dichtomatik.nl
www.dichtomatik.nl

**Gran Bretagna**
DICHTOMATIK LIMITED
Donington House
Riverside Road
Pride Park
GB-Derby DE24 8HX
Phone 01332/52 44 00
Fax 01332/52 44 04
mail@dichtomatik.co.uk
www.dichtomatik.co.uk

**Austria**
DICHTOMATIK HANDELSGES. MBH
Rautenweg 17
A-1220 Wien
Phone 01/259 35 41-0
Fax 01/259 35 41-30
mail@dichtomatik.co.at
www.dichtomatik.co.at

**Svezia**
DICHTOMATIK AB
Box 142
Hjalmar Brantingsväg 25
S-26122 Landskrona
Phone 0418/44 98 00
Fax 0418/44 98 20
mail@dichtomatik.se
www.dichtomatik.se

**Francia**
DICHTOMATIK S.A.S.
Espace Entreprise de
Mâcon Loché TGV
F-71000 Loché
Phone 03/85 27 02 80
Fax 03/85 35 69 37
mail@dichtomatik.fr
www.dichtomatik.fr

**Ungheria**
DICHTOMATIK KFT.
Vegyész utca 17-25
H-1116 Budapest
Phone 01/802 64 00
Fax 01/802 64 10
mail@dichtomatik.hu
www.dichtomatik.hu

**USA**
DICHTOMATIK North America
1087 Park Place
USA-Shakopee, Minnesota 55379
Phone 1 800 328 2840
Fax 1 877 777 6869
sales@dichtomatik.us
www.dichtomatik.us

**Canada**
DICHTOMATIK Canada
950 Denison Steet Unit 21
CDN-Markham, Ontario L3R3K5
Phone 905/470 22 66
Fax 905/470 20 55
sales@dichtomatik.ca
www.dichtomatik.ca

**Brasile**
Division Dichtomatik Brazil
Freudenberg-Nok
Componentes Brazil Ltda.
Av. Piraporinha, 411
BR-Diadema 09950-902 SP
Phone 11/33 63 80 80
Fax 11/33 63 80 81
vzg@fngp.com

**Messico**
International Seal De Mexico
S.A. De Cv.
Av. De Las Misiones No. 5
Fracc. Ind. Bernardo Quintana
MEX-El Marques., Queretaro 76246
Phone 442/221 63 03
Fax 442/221 63 27
efenton@dichtomatikmex.com
www.dichtomatikmex.com

**Cina**
Dichtomatik (China) Co., Ltd
No. 314, Shenxia Road, Jiading District,
201818 Shanghai
Phone +86/21 60 82 21 78
Fax +86/21 60 82 21 80
mail@dichtomatik.cn
www.dichtomatik.cn

DMD s.a.s. - V.Redolone,81/b - 51030 Serravalle P.se (PT) - Tel.0573 526852 - Fax 0573 520774 - info@dmdnet.it

**Any seal. Any time.**

**DICHTOMATIK S.A.S.**
Via delle Fabbriche 6
I-16158 Genova-Voltri
Tel. +39 010/612 75
Fax +39 010/613 38 61
mail@dichtomatik.it
www.dichtomatik.it